TURCK

COMPLETE-PROGRAM ROTARY POSITION SENSORS

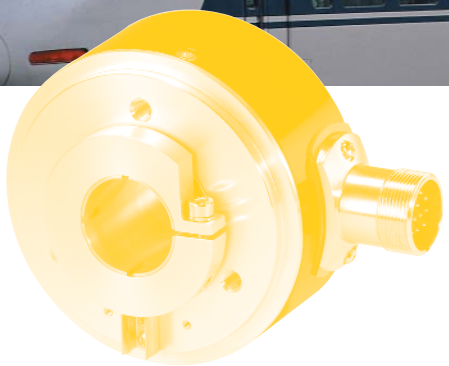

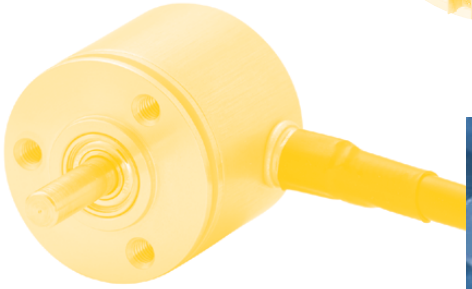

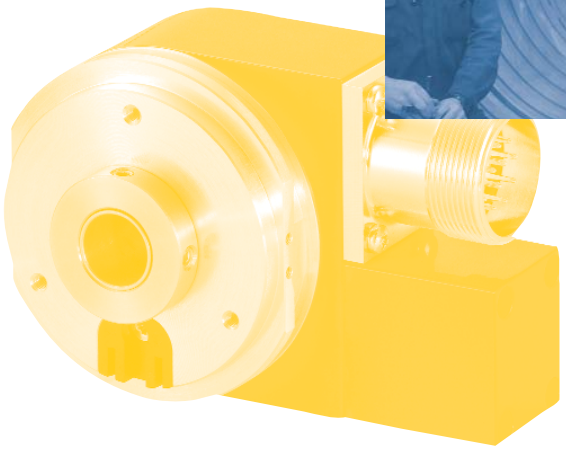

S341/02 – Preliminary Document

Table of content

			Page
Overview incremental rotary position sensors			4
Overview absolut rotary position sensors			8
Overview accessories			10
Overview/Introduction			12
Overview/Mounting possibilities			13
Overview/Selection criteria			15
Incremental rotary position sensors – miniature			
	Miniature	Typ 2400	35
	Miniature	Typ 2420	36
	Miniature	Typ 3600	38
	Miniature	Typ 3700	40
	Miniature	Typ 3720	42
Incremental rotary position sensors – shaft versions			
	Universal	Type 5800	45
	Preferred	Type 5802	48
	High temperature	Type 5803	51
	Sine wave output	Type 5804	54
	High resolution	Type 5805	57
	Low Cost	Type 5810	59
Incremental rotary position sensors – hollow shaft versions			
	Universal	Type 5820	61
	Preferred	Type 5822	64
	High temperature	Type 5823	67
	Sine wave output	Type 5824	70
	High resolution	Type 5825	73
	NIRO	Type 5826	76
	Large hollow shaft	Type A020	79
	Large hollow shaft	Type 0320	82
	Heavy-duty	Type 9000	84
	NIRO	Type 9000	86
	Ex-proof	Type 7030	88
Absolute singleturn rotary position sensors – shaft versions			
	Universal	Type 5850	91
	Preferred	Type 5852	96
Absolute singleturn rotary position sensors – hollow shaft versions			
	Universal	Type 5870	99
	Universal	Type 5872	104
Absolute multiturn rotary position sensos – shaft versions			
	Multiturn	Type 5861	106
	Multiturn	Type 5862	111

			Page
Absolute multiturn rotary position sensors – shaft versions			
	Multiturn	Type 5882	115
	Multiturn	Type 9081	120
Absolute multiturn rotary position sensors – fieldbus			
	Multiturn PROFIBUS	Type 5860	124
	Multiturn PROFIBUS	Type 9080	126
	Multiturn CANopen	Type 9080	130
Absolute rotary position sensors –shaft versions			
	Ex-Proof	Type7031	133
Accessories			
	Draw wire with rotary position sensor		138
	Software		144
	Connectors		145
	Connectors M23x1 male, metal housing		146
	Connectors M23x1, female		147
	Cables		148
	Cables assemblies		149
	Measuring wheels		152
	Flanschadapter		153
	Mounting accessories for sine wave rotary position sensors		158
	Mounting accessories for hollow shaft sensors		159
	Mounting accessories		160
	Couplings		162
	Length measuring device		164
	Assembly bell		165
	Bearing Box		166

Overview incremental rotary position sensors

Version	**Miniature**	**Hollow shaft Miniature**	**Compact**
Type series	**2400**	**2420**	**3600**
Mechanical characteristics			
Shaft / hollow shaft Ø (mm)	4/6	4/6	4/6
max. housing dimensions: (mm)	Ø24 x 20	Ø24 x 25	Ø36.5 x 49
max. speed (min^{-1})	12000	12000	12000
max. shaft load radial/axial (N)	20/10	n/a	15/10
max. operating temp. (°C)	-20 ... +90	-20 ... +90	0 ... +80
Protection to	IP64	IP64	IP65
Type of connection	Cable	Cable	Cable
max. resolution (ppr.)	1080	1024	3600
Electrical characteristics			
Output	Push-pull	Push-pull	RS 422 or Push-pull
Supply voltage (VDC)	5 ... 24 or 8 ... 30	5 ... 24 or 8 ... 30	5 or 10 ... 30
max. pulse frequency (kHz)	160	160	125
highlights or product differentations	high performance at economic price	high performance at economic price	high resolution

Version	**Miniature**	**Hollow shaft Miniature**
Type series	**3700**	**3720**
Mechanical characteristics		
Shaft Ø (mm)	4...8	4...8
max. housing dimensions: (mm)	ø 37 x 32	ø 37 x 32
max. speed (min^{-1})	6000	6000
max. shaft load radial/axial (N)	20/10	–
max. operating temp (°C)	-20 ... +80	-20 ... +80
Protection to	IP65	IP65
Type of connection	Cable	Cable
max. resolution (ppr.)	2500	2500
Electrical characteristics		
Output	RS422 or push-pull	RS22 or push-pull
Supply voltage (VDC)	5 or 5 ... 30	5 or 5 ... 30
max. pulse frequency (kHz)	250	250
highlights or product differentations	High resolution miniature rotary position sensor	High resolution miniature rotary position sensor

Overview incremental rotary position sensors

Version	**Universal**	**Preferred**	**High temperature**	**Sine wave**
Type series	**5800**	**5802**	**5803**	**5804**
Mechanical characteristics				
Shaft Ø (mm)	6 ... 10, 3/8”	6/10/ 3/8”	6 ... 10, 3/8”	6 ... 10
max. housing dimensions: (mm)	Ø58 x 66	Ø58 x 66	Ø58 x 66	Ø58 x 66
max. speed (min^{-1})	12000	12000	12000	12000
max. shaft load radial/axial (N)	80/40	80/40	80/40	80/40
max. operating temp (°C)	-20 ... +90	-20 ... +75	-20 ... +110	-20 ... +90
Protection to	IP65	IP65	IP65	IP65
Type of connection	PUR-Cable/plug	PVC-Cable/plug	TPE-Cable/plug	PVC-Cable/plug
max. resolution (ppr.)	5000	5000	5000	5000
Electrical characteristics				
Output	RS 422 or push-pull	RS 422 or push-pull	RS 422 or push-pull	Sine wave 1Vpp
Supply voltage (VDC)	5, 5 ... 30 or 10 ... 30	5, 5 ... 30 or 10 ... 30	5 or 10 ... 30	5 or 10 ... 30
max. pulse frequency (kHz)	300	200	300	180
highlights or product differentations	universal product with high number of options including MIL-plugs, inch-shaft size etc.	standard rotary position sensor featuring limited specifications and options at economic pricing	operates at temperature up to 110 °C (TPE-cable) options include MIL-plugs, inch-dimension etc.	high quality sine wave signal

Version	**High resolution**	**Economic**	**Hollow shaft, universal**	**Hollow shaft preferred**
Type series	**5805**	**5810**	**5820**	**5822**
Mechanical characteristics				
Shaft Ø (mm)	6/10	6/10	6/8/10/12/14/15	10/12
max. housing dimensions: (mm)	Ø58 x 66	Ø58 x 66	Ø58 x 41,5	Ø58 x 41,5
max. speed (min^{-1})	12000	6000	12000	12000
max. shaft load radial/axial (N)	80/40	80/40	n/a	n/a
max. operating temp (°C)	-20 ... +90	-20 ... +75	-20 ... +90	-20 ... +75
Protection to	IP65	IP 64	IP66	IP66
Type of connection	Cable / plug	Cable / Plug	Cable / plug	Cable
max. resolution (ppr.)	36000	512	5000	5000
Electrical characteristics				
Output	RS 422 or push-pull	push-pull	RS 422 or push-pull	RS 422 or push-pull
Supply voltage (VDC)	5 or 10 ... 30	10 ... 30	5, 5 ... 30 or 10 ... 30	5, 5 ... 30 or 10 ... 30
max. pulse frequency (kHz)	800	100	300	200
highlights or product differentations	High resolution rotary position sensor at excellent price performance ratio	low cost industrial rotary position sensor with limited characteristics	universal product with high number of options regarding output circuitry, hollow shaft etc.	standard model featuring limited specs and options at economic pricing

Overview incremental rotary position sensors

Version	**Hollow shaft**	**Hollow shaft**	**Hollow shaft**	**Hollow shaft**
	High temperature	**Sine wave output**	**High resolution**	**Stainless steel (Niro)**
Type series	**5823**	**5824**	**5825**	**5826**
Mechanical characteristics				
Shaft / hollow shaft Ø (mm)	6/8/10/12	6/8/10/12/14/15	6/8/10/12/14/15	10/12
max. housing dimensions: (mm)	Ø58 x 41.5	Ø58 x 41.5	Ø58 x 41.5	Ø58 x 41.5
max. speed (min^{-1})	12000	12000	12000	12000
max. shaft load radial/axial (N)	n/a	n/a	n/a	n/a
max. operating temp. (°C)	-20 ... +110	-20 ... +90	-20 ... +90	-20 ... +90
Protection	IP66	IP66	IP66	IP66
Type of connection	Cable /plug	Cable / plug	Cable /plug	Cable
max. resolution (ppr.)	5000	5000	36000 interpolated	5000
Electrical characteristics				
Output	RS 422 or push-pull	Sine wave 1Vpp	RS 422 or push-pull	RS 422 or push-pull
Voltage supply (VDC)	5 or 10 ... 30	5 or 10 ... 30	5 or 10 ... 30	5, 5 ... 30 or 10 ... 30
max. pulse frequency(kHz)	300	180	800	300
highlights or product differentations	operates at temperature up to 110 °C (TPE-cable)	high quality sine wave signal	High resolution rotary position sensor at excellent price/performance ratio	Stainless steel housing, sea water version on request

Version	**Heavy duty**	**Stainless steel**
Type series	**9000**	**9000 NIRO**
Mechanical characteristics		
Shaft / hollow shaft Ø (mm)	12	12
max. housing dimensions: (mm)	Ø90x90	Ø90x102
max. speed (min^{-1})	6000	6000
max. shaft load radial/axial (N)	140/70	140/70
max. operating temp. (°C)	-20 ... +90	-20 ... +85
Protection	IP66	IP66
Type of connection	Cable/plug	Cable
max. resolution (ppr.)	5000	5000
Electrical characteristics		
Output Voltage supply (VDC)	RS 422 or Push-pull	RS 422 or Push-pull
max. pulse frequency(kHz)	5 or 10 ... 30	5 or 10 ... 30
highlights or product differentations	300	300
	extended axial and radial load	stainless steel rotary position sensor suitable for food processing and packaging applications

Overview incremental rotary position sensors

Version Type series	**Large hollow shaft A020**	**Large hollow shaft 0320**	**Ex-proof hollow shaft 7030**	**EX-proof shaft 7030**
Mechanical characteristics				
Shaft Ø (mm)	up to 42	up to 25.4	12	12
max. housing dimensions: (mm)	Ø100 x 43	Ø103 x 42	Ø70 x 94	Ø70 x 94
max. speed (min^{-1})	6000	6000	6000	6000
max. shaft load radial/axial (N)	n/a	n/a	n/a	20/10
max. operating temp. (°C)	-20 ... +75	-20 ... +60	-20 ... +60	-20..+60
Protection to	IP65	IP65	IP64	IP64
Type of connection	Cable/plug	Cable/plug	Cable	Cable
max. resolution (ppr.)	5000	5000	5000	5000
Electrical characteristics				
Output	RS 422, Push-pull, sine wave	RS 422, Push-pull	RS 422, Push-pull	RS 422, Push-pull
Supply voltage (VDC)	5 or 10 ... 30	5 or 11 ... 24	5 or 10 ... 30	5 or 10 ... 30
max. pulse frequency (kHz)	300	50	300	300
highlights or product differentations	–	–	EEx d IIC T6 (ATEX in preparation) most compact	EEx d IIC T6 (ATEX in preparation) most compact

Overview absolute rotary position sensors

Version Type series	**Singleturn Universal model** **5850**	**Singletrun parallel model** **5852**	**Singleturn universal model hollow shaft** **5870**	**Singletrun parallel model hollow shaft** **5872**
Mechanical characteristics				
Shaft Ø (mm)	6/10	6/10	6/8/10/12	10/12
max. housing dimensions: (mm)	Ø58 x 66	Ø58 x 66	Ø58 x 41.5	Ø58 x 41.5
max. speed (min^{-1})	6000	6000	6000	6000
max. shaft load radial/axial (N)	80/40	80/40	–	–
max. operating temp. (°C)	-20 ... +90	-20 ... +90	-20 ... +90	-20 ... +90
Protection to	IP65	IP65	IP66	IP66
Type of connection	Plug / cable	Plug / cable	Plug / cable	Plug / cable
max. resolution	16384 (14 Bit)	16384 (14 Bit)	16384 (14 Bit)	16384 (14 Bit)
Type of code	Gray, Binary, BCD	Gray or Gray-Excess	Gray, Binary, BCD	Gray or Gray-Excess
Electrical characteristics				
Version	Singleturn	Singleturn	Singleturn	Singleturn
Interface	SSI, Parallel, 4 ... 20 mA	Parallel	SSI or Parallel	Parallel
Supply voltage (VDC)	5 or 10 ... 30	5 or 10 ... 30	5 or 10 ... 30	5 or 10 ... 30
highlights or product differentations	Shock proof up to 2500 m/s^2	Shock proof up to 2500 m/s^2	Shock proof up to 2500 m/s^2	Shock proof up to 2500 m/s^2

Version Type series	**Multiturn, shaft** **5861**	**Multiturn shaft programmable** **5862**	**Multiturn, hollow shaft, programmable*** **5882**	**Multiturn, hollow shaft or shaft, programmable*** **9081**
Mechanical characteristics				
Shaft Ø (mm)	6/10	6/10	10/12	up to 28 (12 shaft)
max. housing dimensions: (mm)	Ø58 x 8.5	ø 58 x 66	Ø58 x 40.5	Ø90 x 50
max. speed (min^{-1})	10000	6000	6000	6000
max. shaft load radial/axial (N)	60/40	80/40	–	or 90/40
max. operating temp. (°C)	-10 ... +65	-20 ... +80	-20 ... +80	-10 ... +80
Protection to	IP65	IP65	IP65	IP65
Type of connection	Cable / Plug	Cable/Plug	Cable/Plug	Cable / plug
max. resolution	12 x 12 Bit	13 x 12 Bit	13 x 12 Bit	13 x 12 Bit
Type of code	Gray or Binary	Gray oder Binary	Gray or Binary	Gray or Binary
Electrical characteristics				
Version	Multiturn	Multiturn	Multiturn	Multiturn
Interface	SSI or Parallel	SSI, RS 485, AWG-Pr.	SSI, RS 485, AWG-pr.	SSI, RS 485, AWG-pr.
Supply voltage (VDC)	10 ... 30	5 ... 30	5 ... 30	5 ... 30
highlights or product differentations	Latch-input mechanical gear	most compact multi-turn rotary position sensor, gearless multi-turn	most compact multi-turn rotary position sensor, gearless multi-turn	hollow shaft max. ø 28 mm just 50 mm in depth, Intelligent Sensing Technology, 250 g shock proof

Overview absolute rotary position sensors

Version	**Multiturn, Fieldbus**	**Multiturn, Fieldbus hollow shaft**	**Multiturn, Fieldbus shaft**
Type series	**5860**	**9080**	**9080**
Mechanical characteristics			
Shaft Ø (mm)	6/10	12 to 28	12
max. housing dimension (mm)	ø 58 x 88.1	Ø90 x 60	Ø90 x 60
max. speed (min^{-1})	6000	6000	6000
max. shaft load radial/axial. (N)	80/40	n/a	80/40
max. operating temp. (°C)	20 ... +85	-10 ... +70	-10 ... +70
Protection to	IP65	IP65	IP65
Type of connection	Terminal box	Terminal box	Terminal box
max. resolution	13 x 12 Bit	13 x 12 Bit	13 x 12 Bit
Type of code	Binary	According to Device Profile 406 ISO 1189	According to PROFIBUS-DP 2.0 standard (DIN 19 245 Part 3)
Electrical characteristics			
Version			
Interface	Multiturn Fieldbus PROFIBUS	Multiturn PROFIBUS-DP, CANopen	Multiturn PROFIBUS-DP, CANopen
Supply voltage (VDC)	10 ... 30	10 ... 30	10 ... 30
highlights or product differentations	just 58 mm ø	just 60 mm clearance needed	just 60 mm clearance needed

Note:
These rotary position sensors can be supplied together with the following fieldbus products!

Overview accessories

Draw wire rotary position sensor

Draw wire actuator with integrated rotary position sensor

Mini wire-draw rotary position sensor, incremental

compac and robust construction
- measuring length up to 2000mm

Mini wire-draw rotary position sensor, analog output

compac and robust construction
- measuring length up to 1000mm
- voltage or current output

Draw wire actuators

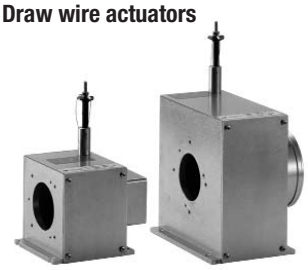

Sturdy draw wire actuators for use with absolute or incremental rotary position sensors

Programming software

The software is a programming software to custom programm any TURCK multiturn rotary position sensors of the latest generation.
The software comes as part of a programm kit (power supply, interface, conector etc...). It allows easy modification of default rotary position sensor settings such as resolutions, outputs and provides enhanced functionality for your rotary position sensor such as setting cam outputs etc. On top of that, It is a practical set-up aid for field installation of your rotary position sensor and may be used as a powerful field diagnosis tool, too.

Connectors

TURCK offers a large range of connectors, with pins or sockets. Connector models include 4, 5, 7, 10, 12 or 17-pin connectors, and MIL connectors to suit your individual need

Connectors M23x1

Connector models M23 x 1 are solid metal connectors and offered als male, female versions or with ccw or cw counting

Cordsets

We supply cordsets that include preassembled cableconnector combinations. Available models include Single- and double connectors versions. Cordsets help to reduce your installations cost and eliminate wiring errors

Measuring wheels

A wide range of measuring wheels, perfectly adapted to TURCK rotary position sensors. Measuring wheels allow accurate length measurement of moving measured material. They are suitable for al types of fabrics, wood, plastic, metal, glass etc, depending on the surface finish or coating that is required.

Overview accessories

Flange adapters

Square or round flanges are used to match individual flange size requirements or to provide an exact flange compatibility with competing rotary position sensors. All adapters are made from Aluminium. They require clamping flange rotary position sensor.

Fastening eccentrics

Fastening eccentrics fit to TURCK rotary position sensors with synchronous flanges.
Use at least three fastening eccentrics to mount an rotary position sensor.

Mounting solutions for hollow shaft rotary position sensor

The stator coupling matches hollow shaft rotary position sensors, types 582x, 587x and 588x. We offer additional mounting accessories for convenient installation of all hollow shaft sensors. There are also application specific mounting materials available.
Simply contact us!

Couplings

TURCK supplies two different kinds of couplings for shaft rotary position sensors:
– Bellow-type couplings recommended as an inexpensive and highly reliabletype of coupling.
– Spring washer couplings
are mainly used in those cases where high speed and smaller angle displacement are requiered. They are easy to mount because they are detachable.

Assembly bell

The Assembly bell allows a quick and an reliable mounting of shaft rotary position sensors with additional benefit of electrical and thermal insulation of the rotary position sensor. The assembly bell comes as a kit that includes coupling, screws etc.

– Easy and quickly rotary position sensors mounting
– electrical and thermical insulation
– complete delivering (set)

Displacement measuring device

TURCK supplies complete measuring set that include:

– spring holding device for rotary position sensors
– Rack and pinion.

Overview introduction

Rotary position sensors can be used in applications, where length, positions, speed or an angular position are measured. They transform mechanical movements into electrical signals and can be divided into incremental and absolute measuring systems.

Incremental rotary position sensors generate pulses, where the number of pulses can be a measure of speed, length or position. In absolute rotary position sensors, every position corresponds to an unequivocal code pattern.

Another basic distinguishing mark are solid-shaft or hollow shaft rotary position sensors.
Nowadays hollow-shaft rotary position sensors are becoming more and more popular. TURCK has been pioneering hollow shaft rotary position sensor technology for many years. Using a hollow shaft rotary position sensor saves up 10 ... 30 % of costs and up to 50% of the required space compared to a shaft rotary position sensor. This is achieved by avoiding additional couplings, brackets and other assembly aids. To mount a hollow shaft rotary position sensor, it is simply necessary to put it on the shaft prevent the rotary position sensor from rotating by means of a pin.
The basic advantages of hollow shaft rotary position sensors in comparison to shaft rotary position sensors are shown in the sketch below.

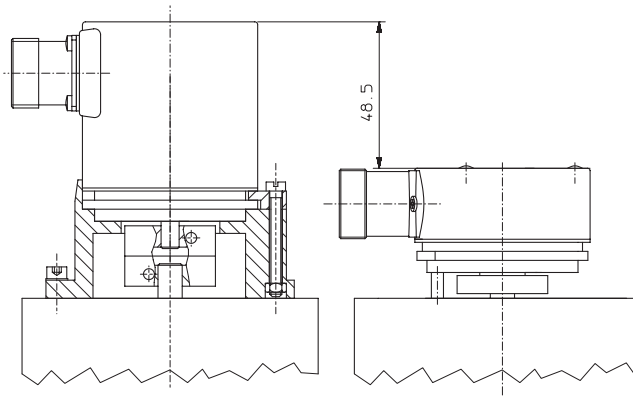

Example:

• shaft sensor	180 EUR	• hollow shaft sensor	190 EUR
• coupling	34 EUR	• simple pin	2 EUR
• bracket	27 EUR		
• mounting time	8 EUR	• mounting time	5 EUR
	249 EUR		197 EUR

Result:
Even if the basic costs of a hollow shaft rotary position sensor is slightly higher compared to a shaft rotary position sensor, the overall cost is > 20% less.

Application examples

Positioning

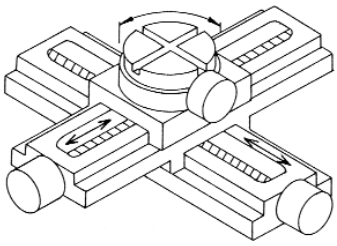

Length measurement

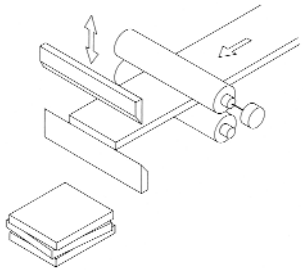

Detecting of fork's position

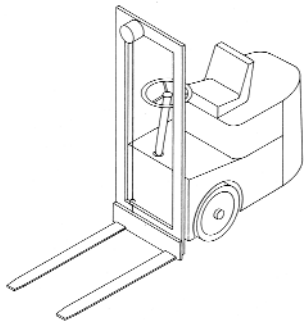

Detecting of position

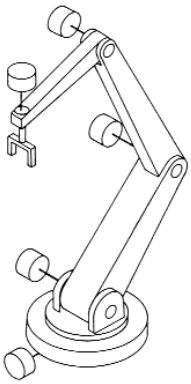

Angular measurement

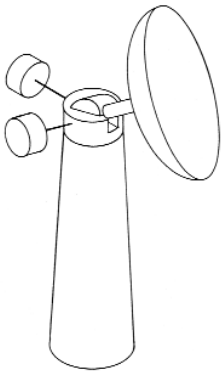

Driver technology

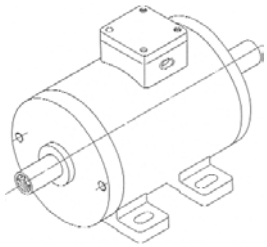

Overview/Mounting examples

Mounting examples for hollow shaft rotary position sensors

Mounting of a hollow shaft rotary position sensor with torque stop and pin (easiest and fastest mounting). Standard hollow shaft rotary position sensors are equipped with the torque stop.

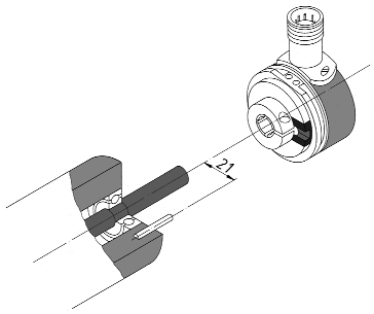

Mounting of a hollow shaft rotary position sensor with extended torque stop and long pin.
Art.No T8.0000.4600.0000

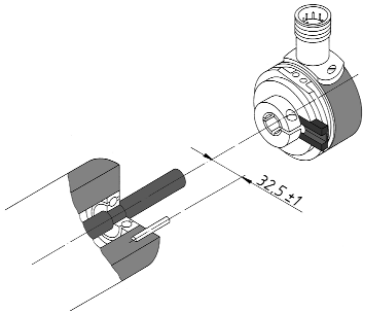

Mounting of a hollow shaft rotary position sensor with a stator coupling
Art.No T8.0010.1601.0000

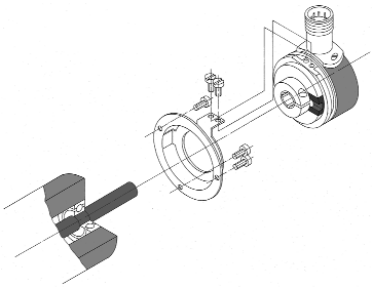

Mounting examples for shaft rotary position sensors with synchronous flange:

Mounting with fastening eccentrics and coupling (to reduce shaft overload)

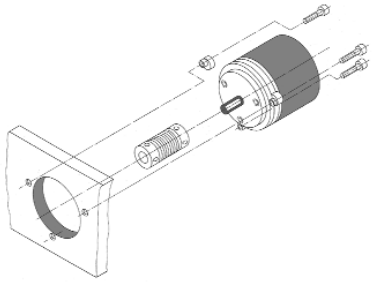

Mounting with assembly bell, fastening eccentrics and coupling (to prevent shaft overload and to insulate the rotary position sensor thermally and electrically)
Art.No T8.0000.4500.XXXX

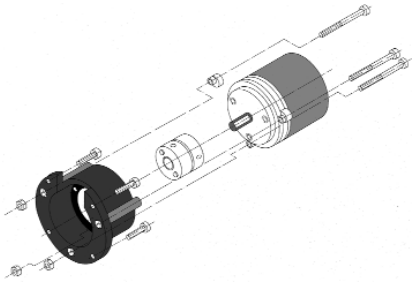

Overview/Mounting examples

Mounting examples for shaft rotary position sensors with clamping flange:

Mounting with an angular bracket and coupling (to reduce shaft overload) e.g. Art.No T8.0010.2300.0000

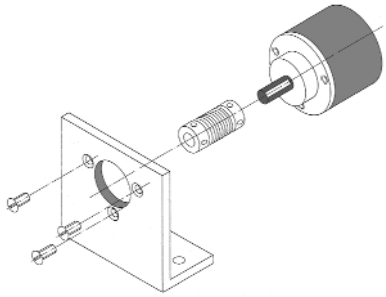

Mounting with a commonly used clamping device and coupling (to reduce shaft overload)

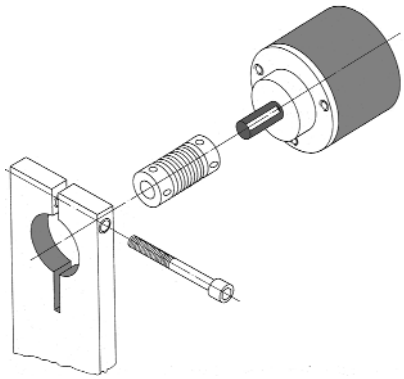

Mounting an rotary position sensor, using a displacement measuring device and a measuring wheel, e.g. for length measuring of foils, fabries, metal sheets etc. The displacement measuring device ensures a constant slight pressure for a safe and precise measurement and also prevents overload to the rotary position sensor ball bearing.
Art.No. T8.0010.7000.0004

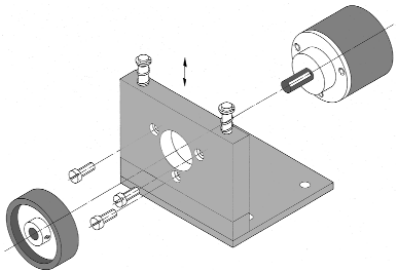

Mounting with a bearing box, if shaft load is very high, e.g. belt-drives etc.
Art.No. 8.0010.8200.0004

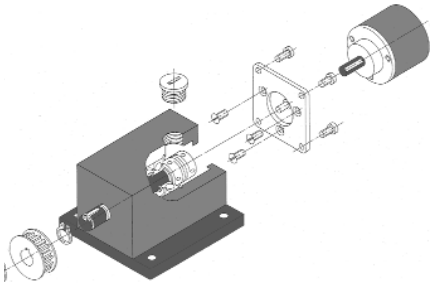

Overview/Selection criteria

Conformity:

All TURCK rotary position sensors fully comply with the CE-regulations and are intensively tested in our EMC laboratories. They conform to CE requirements according to EN 50082-2, EN 50081-2 and EN 55011 class B.

High quality of signals:

All rotary position sensors from TURCK, are equipped with ageing and temperature compensation to ensure a long term and stable signal also after many years of operation.

Ageing compensation:

Each LED source will inevitably lose it's power over a period of time. As a result, the output signal degrades. The phase shift between channel A and B of 90° becomes less and less. The direction of rotation may no longer be detected. Properly by the control, a special electronic circuit, which is built in in the TURCK specific ASIC prevents this effect.

Signals of a new rotary position sensor or encodrs with ageing compensation:

Signals of an older rotary position sensor without ageing compensation:

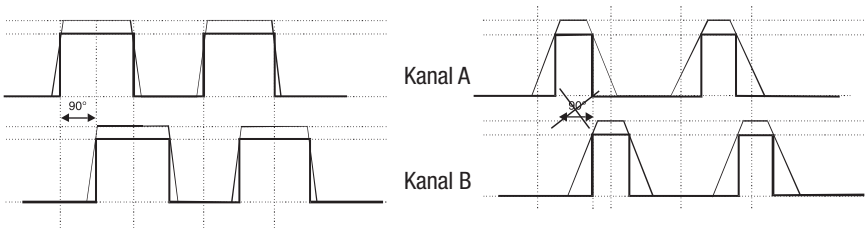

Benefit: The ageing compensation circuit ensures the same signal, even after many years of operating time. The down time of machines will be reduced dramatically and the reliability is increased.

Short-circuit protection:

This specialised circuit ensures that the quality of the signal will stay on the same high level over the whole working temperature range.

Benefit:
The positioning accuracy of a machine will not be affected by temperature changes.

Short-circuit protection:

All TURCK rotary position sensors are equipped with short-circuit protection. This ensures, that if there is a short-circuit or misconnection between the output channels the rotary position sensor will not be destroyed. Once the rotary position sensor is connected the proper way, it will work again.

Benefit:

In cases of misconnection, which can happen quite easily (e.g. due to unskilled workers), the rotary position sensor will not be destroyed.

Environmental conditions:

A significant influence on the lifetime of the rotary position sensor is set by the environment in which the rotary position sensor is operating, e.g.:

- The ambient temperature
- The expected shaft load
- The possible grade of dust/dirt and humidity/liquids

The support design and the use of high quality components makes our rotary position sensors suitable for applications in **rough conditions.**

Many references such as from Bosch, Siemens, Bombardier and other customers proof these high requirements.

Temperature:
Definition according to DIN standards 32 878

AWorking temperature:
Is defined as the environmental temperature, in which the rotary position sensor will produce the signals defined in the data sheets.

Operating temperature:
Is defined as the environmental temperature which the rotary position sensor can withstand without getting damaged.

Overview/Selection criteria

Dirt/dust and humidity/water:

The IP classification according to EN 60529 describes how the rotary position sensor is protected against particles and water. It is described as an abbreviation "IP" followed by two numbers.

The first digit defines the size of the particles. The higher the number the smaller the particles.

The second digit defines the resistance against water. The higher the number, the higher the water pressure can be.

Our rotary position sensors have a protection up to IP67.

These two tables summarise the most used IP ratings

Protection against particles (first digit):

0	not protected
1	protected against particles 50mm and larger
2	protected against particles 12,5mm and larger
3	protected against particles 2,5mm and larger
4	protected against particles 1,0mm and larger
5	protected against dust
6	dust proof

Protection against water (second digit)

0	not protected
1	protected against vertically falling drops of water
2	protected against falling drops of water up to 15° from vertical
3	protected against water sprayed up to 60° from vertical
4	protected against water sprayed from all directions, limited ingress permitted
5	protected against low pressure jets from all directions, limited ingress permitted
6	protected against strong jets of water, e.g.for use on ship decks, limited ingress permitted
7	protection against the affects of immersion between 15 cm and 1 m
8	protected against long periods of immersion under pressure

Colour coding
according to DIN IEC 757

abbreviation	colour
BK	black
BN	brown
RD	red
OG	orange
YE	yellow
GN	green
BU	blue
VT	violet
GY	grey
WH	white
PK	pink
GD	gold
TQ	turquoise
SR	silver

Shaft load:

Due to misalignment and other mechanical influences from outside, the shaft of the rotary position sensor is exposed to a number of different loads. This has a direct impact on the lifetime of the ball bearings and also on the electrical signal itself. If there is an overload there will be an early wear and in the worst case it will lead to a failure of the unit and to a destruction of the optical system inside.

For shaft rotary position sensors the maximal radial and axial load should not be exceeded. It is highly recommended to use a coupling between the rotary position sensor shaft and the drive shaft, see also the accessories and the mounting suggestions.

In the technical data sheets of the rotary position sensors, typical values for the radial and axial load at the shaft end are listed. This is based on the lifetime of the ball bearing, the speed, the mechanical load and the temperature.

To easily find the lifetime for the specific application the following diagrams can be used. All of the diagrams are based on the following parameters:

- 60° C environmental temperature
- The axial load is always half the load compared to the radial load

Encoders from TURCK, such as the 9000 series can with stand up to 140 N radial and 70 N axial load at an life time > 8 years.

Type series 58XX

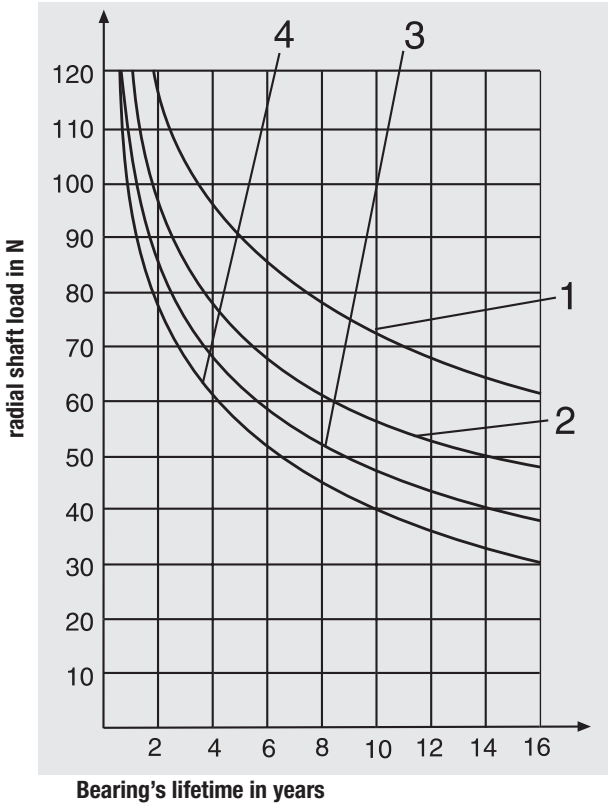

1 n = 3000 min^{-1}
2 n = 6000 min^{-1}
3 n = 9000 min^{-1}
4 n = 12000 min^{-1}

Type series 9000:

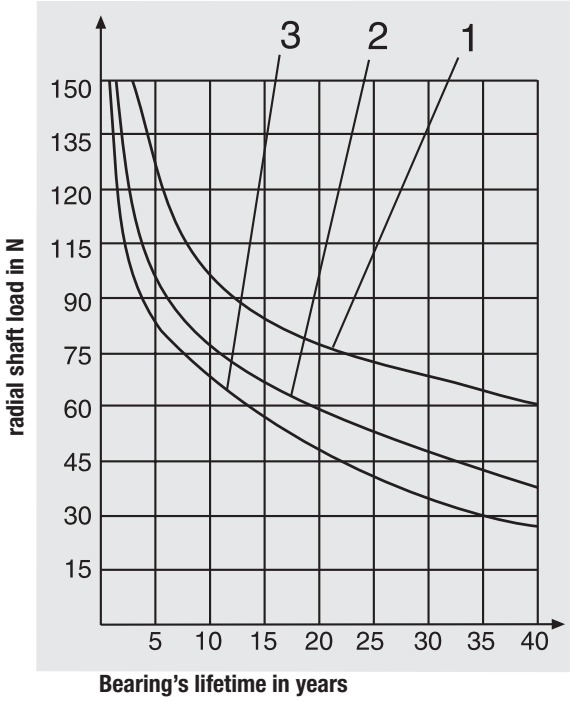

1 n = 2000 min^{-1}
2 n = 4000 min^{-1}
3 n = 6000 min^{-1}

Overview/Selection criteria

Incremental rotary position sensor
Assembly and function:

TURCK rotary position sensors operate on an electro-optical scanning principle.

A disk with a radial grating of lines and gaps rotates between a light source (mostly a LED) and a receiver which produces a sine wave signal proportional to the light received.

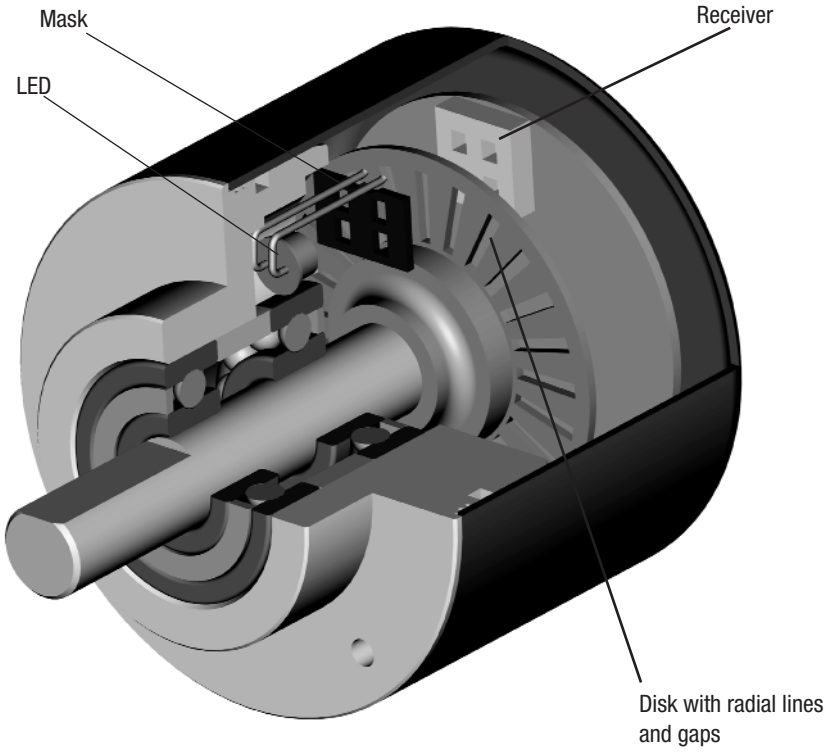

Processing of the signals:

The sine wave signals are processed further in an electronic circuitry, usually a TURCK specific ASIC. This is necessary because most controllers controls (like e.g. TURCK counters) require digital signals with a certain voltage level. For that the signals are pre-processed in the rotary position sensor. The pre-processed signals are transmitted by the output circuit depending on the application.

Selecting an incremental rotary position sensor:

When selecting the rotary position sensor, following parameters should be considered.

Number of channels:

Encoders with one output channel

Encoders with one output channel are used where no direction sensing is needed, e.g. speed control or length measuring.

Encoders with two output channels

Applications, where the direction of a rotation should be sensed, e.g. positioning, require rotary position sensors with two channels A and B being shifted 90° out of phase.
By detecting the phase shift, the direction can be located.

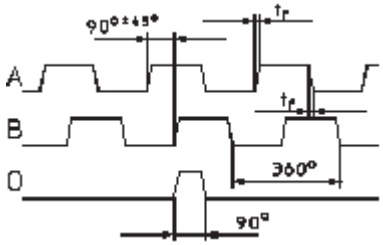

- Shaft turning clockwise, top-view of shaft
- Inverted signals available
- 0-pulse is linked to AND with channel A and B

t_r = rise time
t_f = fall time

Encoders with three output channels

In addition to the two channels A and B there is a zero signal available, that appears once per turn. This can be used e.g. as a reference signal during the first revolution after power up.

Overview/Selection criteria

Multiplication of pulses:

The resolution of a two channel rotary position sensor can be multiplied by two or four using a special edge detecting.

An rotary position sensor with physically 5000 pulses per revolution can generate 20000 pulses per revolution using this technique

Invertierte Signale:

When used in environments, with a lot of electrical noise and/or if very long cable distances are required, we recommend to use rotary position sensors with inverted (complementary) signals.

These signals are always available with output circuits of the RS 422 type and sine wave outputs. TURCK also offers them for push-pull outputs.

Resolution:

Example: An rotary position sensor is equipped with a measuring wheel. Every revolution corresponds to a distance of 200 mm (circumference). The accuracy should be 0.1 mm. What is the required resolution (ppr)?

Given: Circumference of the measuring wheel: U = 200 [mm]

Accuracy of the system: G = 0,1 [mm]

Wanted: Resolution of the rotary position sensor: A = ? [pulses/resolution]

$$\text{resolution} = \frac{\text{Circumference}}{\text{Accuracy}} = \frac{U}{G}$$

The required resolution would be 2000 ppr (pulses per revolution).

Pulse frequency:

The required pulse frequency can be calculated. This is based on the number of pulses per turn (ppr) and the speed (rpm). The max. pulse frequency is listed for each rotary position sensor. Usually it is 300 kHz. TURCK also offers high resolution rotary position sensors with a pulse frequency of up to 800 kHz.

Example
of how to calculate the required pulse frequency f_{max}:

Given: Speed n= 3000 min^{-1}
Resolution of the rotary position sensor R = 1000 ppr

$$f_{max} = \frac{n \times A}{60}$$

The required pulse frequency is 50 kHz. Now you can compare this result with the data of the rotary position sensor you would like to choose.

This diagram can be used for the most common resolutions as a quick guide:

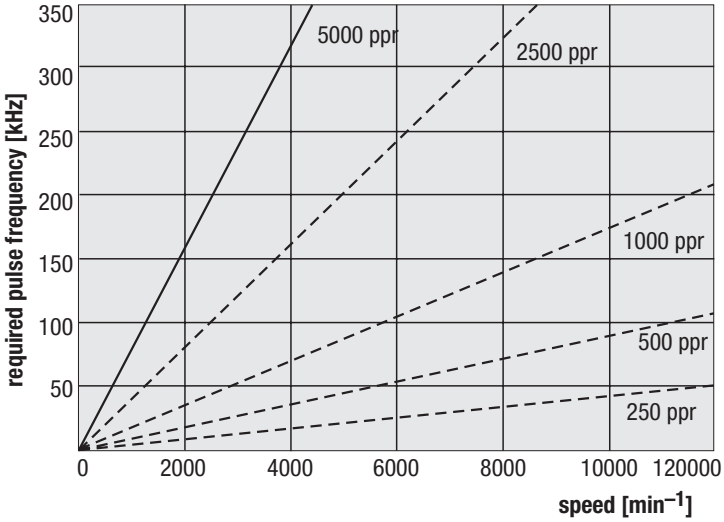

Outputs and voltage supplies (overview):

TURCK offers a wide range of possible outputs and voltage supplies for any application

Output	Inverted signals	Voltage supply
RS 422	Yes	5 VDC
RS 422	Yes	10 ... 30 VDC or 5 ... 30 VDC
Push Pull output	No	10 ... 30 VDC or 5 ... 30 VDC
Push Pull output	Yes	10 ... 30 VDC or 5 ... 30 VDC
Sine wave voltage output	Yes	5 VDC
Sine wave voltage output	Yes	10 ... 30 VDC

If the rotary position sensor is used in an environment with strong electrical noise and long cables we highly recommend the use of inverted signals.

Sensor outputs:

The sensor outputs are used if the distance from the rotary position sensor to the control unit is very long and the voltage supply at the rotary position sensor could drop due to this long distance.
The input impedance of the sensor inputs (Controller) is very high, and the voltage drop on the sensor output line is almost zero. Due to this it is possible to detect the actual supply voltage of the rotary position sensor (e.g. 4.2 V instead of 5 V). Based on this information the controller will increase the voltage supply to e.g. 5.8 V.

Overview/Selection criteria

Digital outputs:

The sine wave signal from the optical system is first digitised to have square wave signals available.

- Shaft turning clockwise, top view of shaft
- Inverted signals are available
- 0-pulse is linked to AND with channel A and B

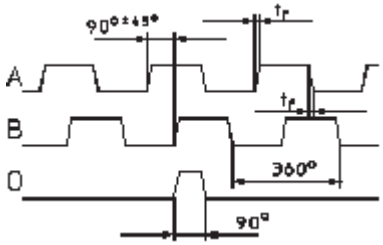

To transmit the signals there are two possible outputs available. RS 422 (TTL compatible) or push-pull (covers PNP or NPN). For choosing the suitable output for the application the following points have to be considered:

- The corresponding unit / controller the rotary position sensor will be connected to
- The distance from the rotary position sensor to the receiver unit
- The sensitivity against electrical noise or other interferences.

Output circuit and recommended input circuit RS 422:

rotary position sensor

recommended input circuit RS 422:

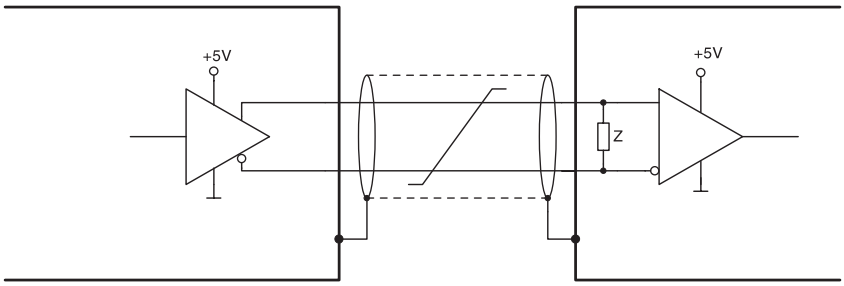

RS 422 line driver

RS 422 line receiver
e.g. AM26 C 32
Z = 120 Ω

Push-pull:

Push-pull outputs are suitable for count interface cards, electronic counters or PLC inputs.

Output circuit and recommended input circuit push-pull with inverted signals:

rotary position sensor

recommended input circuit

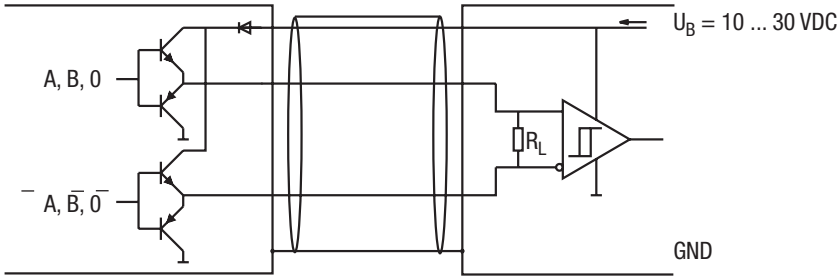

integrated push-pull driver
with automatic wave impedance adjustment
(Z = 40 ... 150 Ω)

R_L = 1 kΩ

Output circuit and recommended input circuit push-pull without inverted signals:

rotary position sensor

recommended input circuit

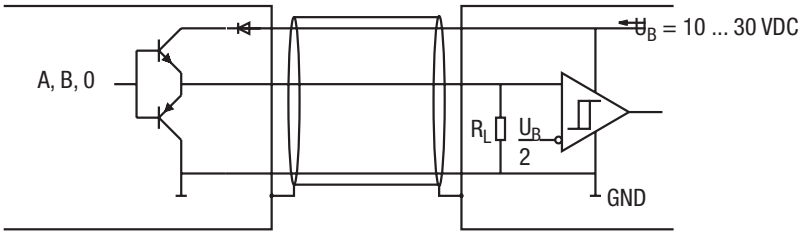

Integrated push-pull driver
with automatic wave impedance
adjustment
(Z = 40 ... 150 Ω)

RL = 1 kΩ

Sine wave outputs:

The sine wave signals are available as voltage signals. They can be further processed and can be multiplied by a factor of usually 10, 20, 50, 100, 400, 500, 1000 res. binary factors (512, 1024). Due to the interpolation of the two signals, which are 90° out of phase, a very high resolution can be achieved.
This makes these kind of signals specially useful for applications where very high resolutions are required. Further they are very suitable for digital drives with a very slow and precise movement, e.g. for grinding machines or lifts and elevators.

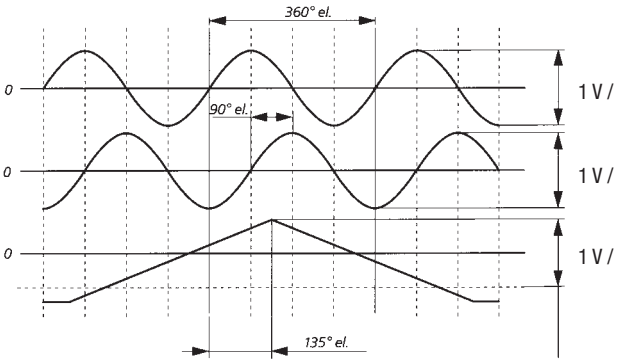

- Shaft turning clockwise, top view of shaft
- 0-pulse is generated once per turn

Output circuit and recommended input circuit for sine wave voltage signals:

rotary position sensor

recommended input circuit

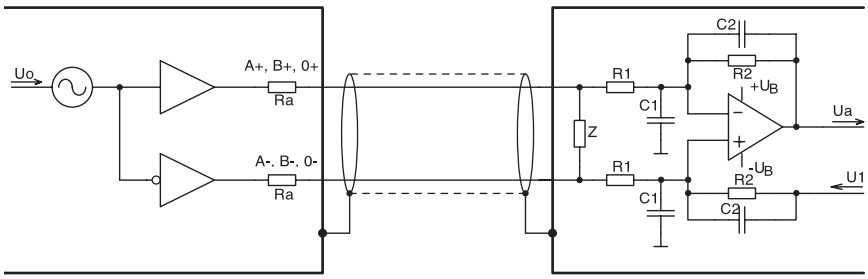

R_a = 10 Ω
C_1 = 150 pF
C_2 = 10 pF
R_1 = 10 kΩ
R_2 = 33 kΩ
U_0 = 2,5 V ±0.5 V

Z = 120 Ω
$U_1 = U_0$

OPV: for example MC33074

Overview/Selection criteria

Cable length:

Depending on the output circuit and the electrical noise the following cable lengths are recommended:

Output circuit	max. cable length	Encoder connected to e.g.
Push-pull without inverted signals	100 m	TURCK counter/PLC
Push-pull with inverted signals	250 m	PLC/IPC[1)]
RS 422 with inverted signals	up to 1000 m (> 50 m depending on frequency)	PLC/IPC[1)]
Voltage sinus with inverted signals	50 m	PLC/IPC[1)]

[1)] IPC = industrial PC

Annotations:

- Depending on the application the recommended cable length can be shorter, especially in areas with strong electrical noise.
- Always use shielded cables
- The core diameter of the signal cores should be ≥ 0,14 mm^2
- The core diameter of the voltage supply cores should be large enough depending on the cable length, that the voltage supply of the rotary position sensor is high enough and the signals do not go below the minimum levels!
  We strictly recommend the use of the cable types written down in the accessories.

Absolute rotary position sensor
Design and function:

Absolute rotary position sensors have a disk with a digital coding on concentric tracks. This code is read by a TURCK Opto-Asic. A unique bit pattern is assigned to each position.

The advantage is, that after power failure true position verification is available as soon as power is up again, even if the shaft was moved during the dead state.

Advantage: No reference drives after starting-up are necessary as with incremental systems. Safety is increased and the time taken for reference drives is saved.

Selecting an absolute rotary position sensor:

When selecting the right absolute rotary position sensor the following parameters should be considered in addition to the recomendations on page 17.

- Supply voltage
- Type of code
- Interface (SSI, parallel, fieldbus, 4 ... 20 mA)

Versions:

Singleturn rotary position sensors:
Depending on the number of divisions they generate up to 16384 (14 Bit) unique per turn. This corresponds to an angular resolution of 0.022° (= 1,3'). After one revolution the process restarts.

Singleturn rotary position sensors can be used in applications where revolution is sufficient, e.g. measurement of angles, robotic.

Multiturn rotary position sensors:
They are available with up to 8192 (13 Bit) definite angular positions per revolution and in addition 4096 (12 Bit) definite revolutions. This corresponds to 33.5 million definite positions.

Multiturn rotary position sensors can be used for positioning applications e.g. automatic storage, retiered systems, lift elevators, cranes, machine tool, etc.

Code types:

Binary Code:

The binary code can be processed very easily by computer systems. When using optical read-out, errors may occure, because the change from one bit to another on the different concentric tracks (LSB, LSB+1...) is not exactly synchronized. Due to this, without any correction of the code, the position information could be wrong.

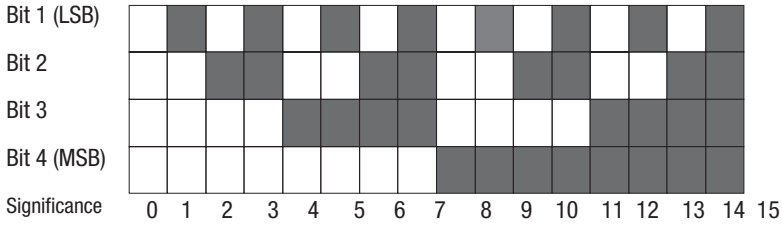

Gray Code:

The Gray Code is a single-step code. This indicates, that from one position to the next only 1 bit is changed. The reliability of the code detection is increased, which leads to a high position-reliability.

The gray code is used to opticaly read out the position for all absolute rotary position sensors

Symmetrically cut Gray Code (Gray-Excess):

The extraction of a defined part of the gray code leads to the gray-excess code. This code enables the generation of non binary based divisions, e.g. 360, 720, 1000, 1440.

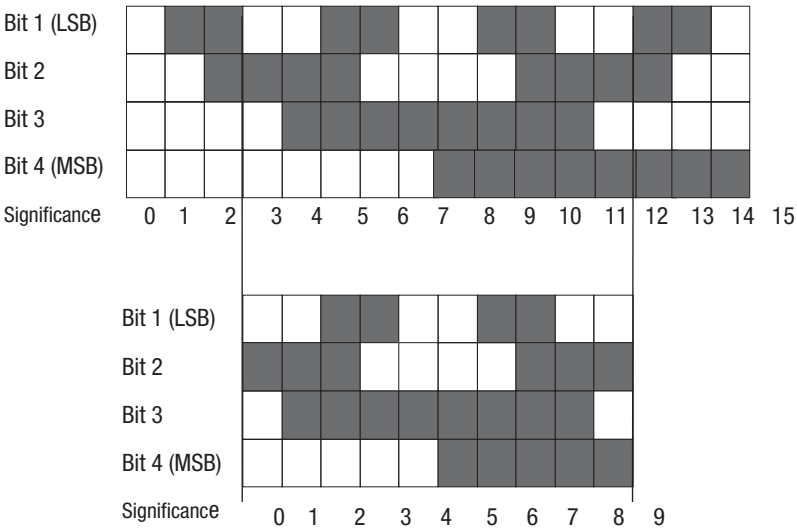

Overview/Selection criteria

Reversion of the Gray Code:

The code values increase when the shaft is turning clockwise. If the most significant bit (MSB) is inverted, the code values decrease when the shaft is turning clockwise

Programmability

The rotary position sensor type series 5862, 5882 and 9081 are user programmable. For this you can use the TURCK programming software-tool.

Singleturn technology wiht Patented Integrative Technology®:

The patented Integrative Technology consists of a number of steps, that result in a compact construction, high signal quality, high shock resistance for the single turn part of an absolute rotary position sensor:

- up to 2500 m/s^2
- high reliability and improved EMC characteristics.

This is realised by using an Opto-Asic,a multilayer board and an especially shock resistant and compact construction of the transmitter. In addition a second Asic replaces several hundred components.

Advantages of Integrative Technology:
The Integrative Technology allows a very compact and flat construction. All singleturn rotary position sensors are available with the same dimensions as their incremental counterparts. This ensures an easy mechanical exchange. Singleturn hollow shaft rotary position sensors with a resolution of up to 16384 divisions (14 bit) need a depth of only 42 mm. This technology is implemented in all singleturn and multiturn rotary position sensors of the latest generation.

Size comparison and comparison of complexity

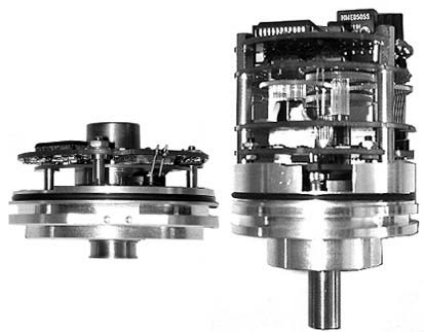

TURCK multiturn electronic with Intelligent-Sensing-Technology®

Standard mechanical multi-turn rotary position sensor

Advantages of electronic multiturn rotary position sensors

Electronic multiturn increases performance, eliminates gears

- Reliability - No backlash errors, resistant to EMI, lower parts count
- Higher life - No mechanical wear, lower internal temperature
- Higher performance - Higher operating speeds
- Lower profile - compact size, hollow shaft
- Economical - Lower cost

Multiturn design with patended Intelligent Sensing Technology (IST)®

The novel function principle of the electroni multiturn devices compensates the inherent disadvantages of rotary position sensors with mechanical gears or with conventional electronic gear technology.

Advantages:

– Three redundant systems increase operational safety and prevent system down-times (alarm indication)
– Compensation of electro-magnetic interference via logic filters and the fundamentally different operation mode of the system
– Multiturn design that protects rotary position sensor from EMI and increases battery life to10 years.
– The battery outlasts both application requirements and system components (LEDs & bearings)
– Redundant multiturn sensors and counters increase reliability & life
– Active system output monitoring using < digital filters to compare data to & target bits.

Overview/Selection criteria

Outputs

To transfer the position data to a controller, different interfaces are available.

Parallel output:

This type of transfer is very fast. All bits of a position are transferred simultaneously each via a separate line.

Output circuit and recommended input circuit parallel interface:

rotary position sensor

recommended input circuit

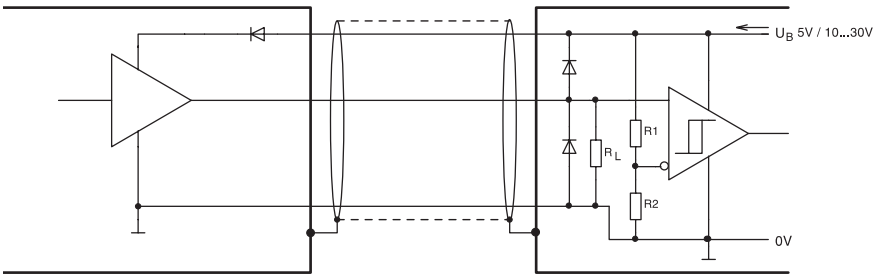

Integrated push-pull driver

Synchronous Serial Interface (SSI):

Compared to the parallel interface, the SSI interface needs less components and the EMC-characteristics are much better. In addition less cores are needed for transmission and the possible cable length is much longer.

Output circuit and recommended input circuit of the SSI-Interface:

rotary position sensor

Recommended input circuit
Optocoupler, e.g. 6N137

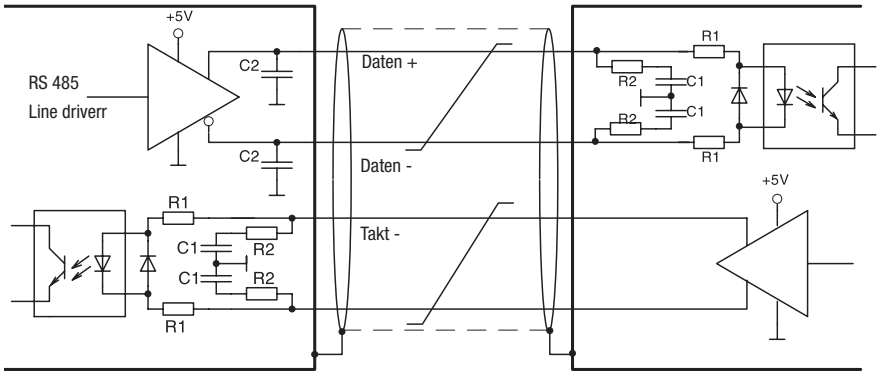

$R_1, R_2 = 100\ \Omega$

$C_1 = 1$ nF

Overview/Selection criteria

Data transmission:

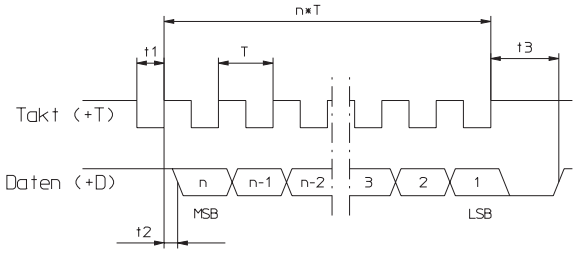

Typical values:
t1 ≥ 1 µs
t2 < 0,5 µs (without cable)
t3 = max.40 µs
2 µs ≤ T ≤ 10 µs
n = resolution in bits

At rest, the clock and data lines are on high. The first trailing pulse edge signals the start of data transmission.
The data are transmitted in bits, starting with the MSB with the leading pulse edges after that. Transmission of a complete data item requires n + 1 leading pulse edges (n = resolution in bits). After the load positive-going clock signal, the data line stays on low until the rotary position sensor is ready for a new data item. The clock line must stay on high for at least as long and after that, can start as new read-out sequence with a trailing edge.

Please note:
The data are updated synchronously with the read-out cycle. The data are therefore as current as the temporal distance between two read-outs; periodic read-out of the rotary position sensor is therefore recommended. After a long break in read-out and with the rotary position sensor simultaneously turning the shaft, the data content may be 'out of date' by the time of the first read-out and should be ignored.

Cable length:

Depending on the desired output circuit, we recommend following cable lengths:

Interface and output circuit	max. cable length	Connected to
Parallel CMOS/TTL	2 m	PLC/IPC[1)]
Parallel push-pull	100 m	PLC/IPC[1)]
SSI	up to 1200 m	PLC/IPC[1)]
RS 422 /RS 485	(>50 m depending on frequency)	

[1)] IPC = Industrial PC

Annotations:
- Depending on the application the recommended cable length can be shorter, especially in areas with strong electrical noise.
- Always use shielded cables
- The core diameter of the signal cores should be ≥ 0,14 mm^2
- The core diameter of the voltage supply cores should be large enough depending on the cable length, that the voltage supply of the rotary position sensor is high enough and the signals do not go below the minimum levels!
  We strictly recommend the use of the cable types written down in the accessories.

Type of connection and recommended input circuit

rotary position sensor

recommended input circuit

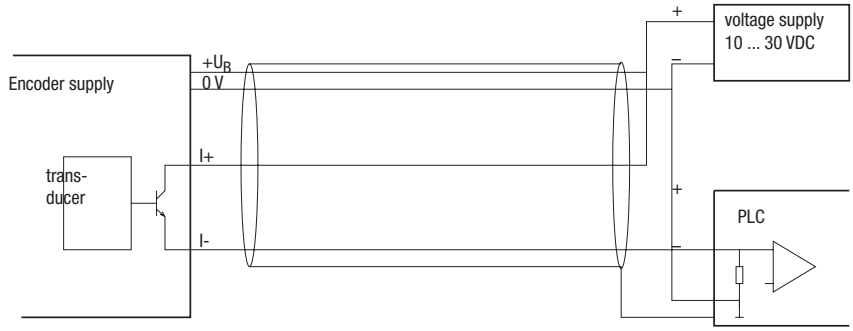

Overview/Selection criteria

Bus systems:

The use of a network of sensor-actuator bus systems has essential advantages:

- Reduced expenditure concerning connection: All members are linked by one cable.
- Wide range diagnostics and programming possibility of the units.

In the following please find the available bus systems:

CAN:

- CAN fullfils the real time demands of the automobile industries (ABS, Airbag, Motormanagement)
- Multi-Master system
- The message text (speed, position...) itself is marked by an identifier through the whole network, instead of indexing the nodes.
- Check for importance of message
- Accept or ignore network wide broadcasting
- high allocation on the network
- Monitoring (high reliability)
- Bus Specification according to CAN High Speed ISO/DIN 11898 for transmission rates of up to 1 Mbaud.

Introduction

The TURCK PROFIBUS rotary position sensor is an absolute multiturn rotary position sensor. The version described sends its current position to another station via the "CAN-bus" transmission medium (physically: screened and twisted two-wire line). The serial bus system CAN (Controller Area Network), which had been originally developed for automotive uses, is gaining ground in industrial automation technology. The system is multimaster compatible, i.e. several CAN- stations are able to request the bus at the same time. The data transfer is regulated by the message's priority. The message with the highest priority (determined by the identifier) will be received immediately. Within the CAN system, there are message identifiers but no transport addresses. The message which is being sent can be received by all stations at the same time (broadcast). By means of a special filter method, the station only accepts the relevant messages which is of importance for this station. The identifier transmitted with the message is the basis for the decision as to whether the message will be accepted or not. The bus coupler is standardised according to the international standard ISO-DIS 11898 (CAN High Speed) and allows data to be transferred at a maximum rate of 1 MBit/ s. The most significant feature of the CAN-protocol is its high level of transmission reliability (Hamming distance = 6). The CAN-Controller Intel 82527 used in the rotary position sensor is basic as well as full-CAN compatible and supports the CAN-specification 2.0 part B (standard protocol with 11-bit- identifier as well as extended protocol with 29-bit identifier). Until today, only 11-bit identifiers have been used for CANopen.

Field of application

In applications, where the position of a drive or of other parts of a machine has to be recorded and signalled to the control system, the rotary position sensor can carry out this function. The rotary position sensor can resolve, for instance, positioning tasks by sending the check-back signal concerning the present drive position via the CAN bus to the positioning unit.

The CANopen Profile

CANopen allows for:

- synchronisation of the devices,
- auto-configuration of the network,
- comfortable access to all device parameters.
- Network Management (NMT, Life-Guarding)
- predefined objects (for synchronisation, time stamp, emergency message)

- simultaneous data input and output.
- cyclical and event-controlled process data processing,

CANopen uses
four communication objects (COB) with different features:

- Process Data Objects (PDO) for real-time data
- Service Data Objects (SDO) for the transfer of parameters and programs

All device parameters are stored in an object directory. The object directory contains the description, data type and structure of the parameters as well as their addresses (index). The directory consists of three parts:

- communication
- profile parameters,
- device profile parameters and manufacturer specific parameters.

Existing Profiles

The following device profiles already exist::

- CiA Draft Standard Proposal 401 for Input/Output Modules
- CiA Draft Standard Proposal 402 for Drives and Motion Control
- CiA Work Item 403 for Human-Machine Interfaces
- CiA Work Draft 404 for Closed-Loop Controllers and Transformers
- CiA Work Item 405 for IEC-1131 Interfaces
- CiA Draft Standard Proposal 406 for Encoders
- CiA Work Item 407 for Public Transport
- CiA Work Item 408 for Fork-Lifts

The rotary position sensor device profile (CIA DSP 406)

This profile describes a standardised and binding, but manufacturer-independent definition of the interface for rotary position sensors. The profile not only defines which CANopen functions are to be used, but also how they are to be used. This standard allows an open and manufacturer-independent bus system. The device profile consists of two object categories

- the standard category C1 describes all the basic functions the shaft rotary position sensor must contain
- the extended category C2 contains a variety of additional functions which either have to be supported by category C2 shaft rotary position sensors (mandatory) or which are optional. Category C2 devices thus contain all C1 and C2 mandatory functions as well as, depending on the manufacturer, further optional functions. In addition, an addressable area is defined in the profile, to which, depending on the manufacturer, different functions can be assigned.

DATA Transmission

In CANopen, the data is transferred by means of two different communication types (COB = Communication Object) with different features:

- Process Data Objects (PDO)
- Service Data Objects (SDO)

The priority of the message objects is determined by the COB identifier.
The process data objects (PDO) serve the highly dynamic exchange of real-time data (e.g. position of the shaft rotary position sensor) with a maximum length of 8 Byte.

This data is transferred with high priority (low COB identifier). PDOs are broadcast messages and put their information simultaneously at the disposal of all desired receivers. The service data objects (SDO) form the communication channel for the transfer of device parameters (e.g. programming of the shaft rotary position sensor's resolution). Since these parameters are transferred acyclically (e.g. only once when starting up the network), the SDO objects have a low priority (high COB identifier).

Node number

The 7-bit node number is set by means of the hardware via the 6 DIP switches on the rotary position sensor's connection pcb.

Overview/Selection criteria

PROFIBUS-DP

- Connection to other networks via Gateways
- Master/slave or master/master principle
- Cyclical user data transfer with relatively high data rate
- Master and slave feature different ident-nos.
- Dynamic activation and de-activation of slaves
- Very complex fieldbus systems

Grundlagen PROFIBUS-DP

The basic functions of the PROFIBUS-DP are only described in extracts in here. For additional information, please refer to the standards on PROFIBUS-DP, i.e. DIN 19245-3 and EN 50170 respectively.

Introduction

The TURCK PROFIBUS-DP rotary position sensors areusually muliturn absolute rotary position sensors. The version described sends its current position to another station via the transmission medium "PROFIBUS-DP" (physically: screened and twisted pair line). The Profibus rotary position sensor supports all class 1 and 2 functions listed in the rotary position sensor profile. PROFIBUS-DP is standardised and binding, but manufacturer-independent definition for a variety of applications in the field of production, process and automation. The requirements of openness and independence from the manufacturer are stipulated in the European standard EN 50 170. PROFIBUS-DP permits the communication of devices produced by different manufacturers without any particular adaptations of the interfaces. PROFIBUS-DP is a special standard version for a quick data exchange within the field level which has been optimised in terms of speed and low connection costs. Central with local field devices like drives, valves, or rotary position sensors. The data exchange between these devices is predominantly cyclical. The communication functions required for this exchange are determined by the functions of the PROFIBUS DP according to the EN 50 170 European standard.

Field of application

In systems, where the position of a drive or of any other part of a machine has to be recorded and transmitted to the control system, the rotary position sensor is doing this function. The rotary position sensor can resolve, for instance, positioning tasks by sending the feedback signal concerning the present drive position via the PROFIBUS-DP to the positioning unit.

Basic function of the PROFIBUS-DP

The central control system (master) cyclically reads out the input information from the slaves and transmits the output information to the slaves. For this purpose, the bus cycle time has to be shorter than the program cycle time of the central control system (e.g. SPC, or IPC), which amounts to approx. 10 ms for several applications. Beside the cyclical user data transfer, the PROFIBUS-DP version also disposes of powerful functions for diagnosis and initial operation procedures. The data traffic is controlled by watchdog functions on both the slave and the master side. In the following the basic functions of the PROFIBUS-DP are summarised in short.

Transmission technology:
- RS-485 twisted pair line
- Baud rates ranging from 9.6 kbit/s up to 12 Mbit/s

Bus access:
- Monomaster or multimaster systems possible
- Token passing procedure between the masters and master-slave procedures for slaves
- master and slave devices, max. of 126 stations at a single bus

Communication:
- Point-to-point (user data communication) or multicas (control commands)
- cyclical master-slave user data communication and acyclical master-master data transfer

Operating state:
- Operate: cyclical transfer of input and output data
- Stop: only master-master data transfer is possible
- Clear: The input data are read, the output data remain in the safe status
- **Synchronisation:** Control commands enable a synchronisation of the input and output data
- Sync mode: Output data are being synchronised

PROFIBUS-DP Basic Functions:

Functionality:
- Address assignment for the DP slaves via the bus
- Cyclical user data transfer between DP master and DP slave(s)
- Configuration of the DP master (DPM1) via the bus
- Single DP slaves are dynamically activated or deactivated
- Control of the DP slave's configuration.
- Powerful diagnostic functions, 3 stepped diagnostic message levels.
- Maximum of 246 byte input and output data per DP slave possible
- Synchronisation of in- and/ or output

Protection functions:
- Access protection of the DP slaves' input/ output
- All messages are transferred with a hamming distance of HD=4
- Response control at the DP slaves
- Monitoring of the user data communication with adjustable control timer at the master

Device types:
- DP master class 2 (DPM2), e.g. programming/ project planning devices
- DP master class 1 (DPM1), e.g. central automation devices like SPC, PC
- DP slave e. g. devices with binary or analogue input/output, drives, valves

Diagnostic function

The extensive diagnostic functions of PROFIBUS-DP allow a quick localisation of possible errors. The diagnostic messages are transmitted by means of the bus and are joined together at the master.

System Performance

To ensure a high level of exchangeability between the devices, the system performance of PROFIBUS-DP has also been standardised. It is mainly determined by the operational status of the DPM1. The DPM1 can either be controlled locally or via the bus by the project planning device. The following three main states are available:

Operate
The DPM1 has entered the data transfer phase. In case of a cyclical data traffic, the input is read by the DP slaves while the output is transferred to the DP slaves. After an error has occurred during the data transfer phase of the DPM1, like for example, the failure of a DP slave, the response of the system is determined by the operating parameter "Auto Clear". If this parameter has been set to true, the DPM1 will set the output of all the respective DP slaves to the safe status, as soon as a DP slave is no longer available for user data communication. Afterwards, the DPM1 changes to the clear status. If this parameter is = false, the DPM1 remains, even if an error occurs, in the operate status, and the user can determine the response of the system at his own decision.

Stop
There is no data traffic between DPM1 and the DP slaves.

Clear
The DPM1 reads the input information of the DP slaves and maintains the safe status of the DP slaves' output.

Cyclical data transfer between DPM1 and the DP SLAVES

The data traffic between the DPM1 and the respective DP slaves is automatically handled by the DPM1 in a fixed, recurring order. When configuring the bus system, the user assigns a DP slave to the DPM1. In addition the slaves are in- or excluded from the user data communication. The data traffic between the DPM1 and the DP slaves is subdivided in three phases: parameterisation, configuration, and data transfer.
Before including a DP slave in the data transfer phase, the DPM1 checks during the parameterisation and configuration phase, whether the planned set configuration corresponds to the actual configuration of the device. For this check, the device type, the information on the format and the length as well as the number of input and output lines have to be correct. Due to this check it is ensured that the parameterisation is reliable and correct at the end. In addition to the user communication, which is automatically executed by the DPM1, the user can request the new parameterisation data to be sent to the DP slaves.

Incremental rotary position sensor shaft versions
Miniature Type 2400

- Low price at high performance
- IP 64
- Wide temperature range (-20 ... +85 °C)
- Housing is resistant against environmental influences due to chromium plated surface
- Sturdy cable output with multiple clamping
- Temperature compensation
- Broad input voltage range (5 ... 24 V or 8 ... 30 V)
- Highly flexible cable with stands constant flexing from 0 °C ... 70 °C)
- Low power consumption despite high scanning rate
- Reverse connection protected and short-circuit proof

Mechanical characteristics:

Speed:	max. 12 000min^{-1}
Rotor moment of inertia:	appr. 0,1 x 10^{-6} kgm^2
Starting torque:	<0,001 Nm
Radial load capacity of shaft:	10 N
Axial load capacity of shaft:.	20 N
Weight:	appr. 0.06 kg
Protection acc. to EN 60529:	IP64
Working temperature:	-20° C ... +85 °C
Operating temperature:	-20° C ... +90 °C
Shaft	stainless steel
Shock resistance acc. to DIN-IEC 68-2-27	1000 m/s^2, 6 ms
Vibration resistance acc. to DIN-IEC 68-2-6:	100 m/s^2, 55 ... 2000 Hz

Pulse rates available at short notice:

10, 25, 36, 50, 60, 100, 125, 180, 200, 250, 360, 500, 512, 1000, 1024, 1080

Electrical characteristics:

Output circuit:	Push-pull	Push-pull
Supply voltage:	5 ... 24 VDC	8 ... 30 VDC
Power consumption (no load):	max. 50 mA	max. 50 mA
Permissible load/channel:	max. 50 mA	max. 50 mA
Pulse frequency:	max. 160 kHz	max. 160 kHz
Signal level high:	min. U_B = -2,5 V	min. U_B = –3 V
Signal level low:	max. 0.5 V	max. 2.5 V
Rise time t_r:	max. 1 µs	max. 1 µs
Fall time t_f:	max. 1 µs	max. 1 µs
Short circuit proof outputs: DIN-IEC 68-2-27	yes	yes
Conforms to CE requirements acc. to EN 50082-2, EN 50081-2 and EN 55011 Class B		

Applications:

- Pick and place machines
- Handling machines for electronic components
- Quality testing machines
- Medical machines
- Mail opening and mail stuffing machines
- Check weighers
- Labeling machines
- Mole machines (camera control)
- Textile mashines

Incremental rotary position sensor shaft versions
Miniature Type 2400

Terminal assignment

Signal:	0V	$+U_B$	A	$\overline{A}$	B	$\overline{B}$	0	$\overline{0}$
Colour:	WH	BN	GN	YE	GY	PK	BU	RD
without inverted signal:	WH	BN	GN		YE		GY	

Insulate unused outputs before initial startup.

Dimensions:

Flange type 1 (Ø24 mm)

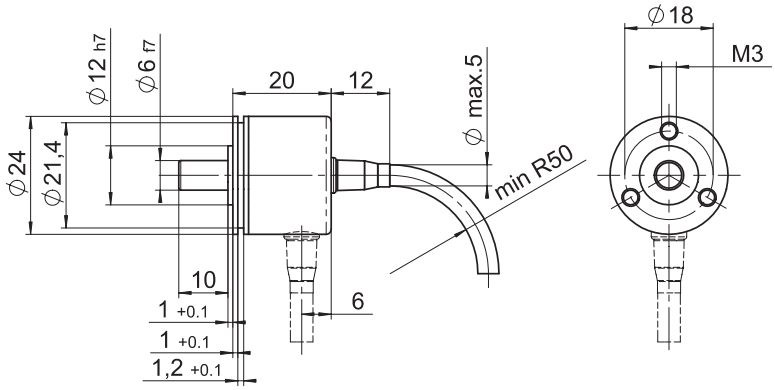

Flange type 2 (Ø 30 mm)

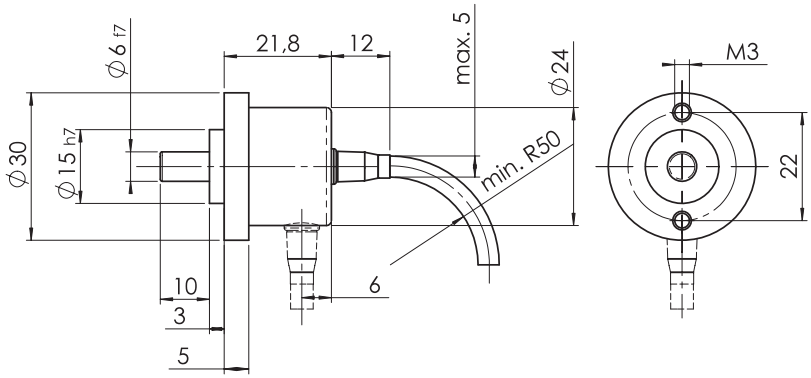

Mounting advice:

Do not connect rotary position sensor and drive rigidly to one another at shafts and flanges! Always use couplings to prevent shaft overload (see chapter accessories).

Order code:

T05.2400.XXXX.XXXX

Range

Flange
- 1 = ø 24 mm
- 2 = ø 30 mm

Shaft
- 1 = ø 4 mm x 10 mm
- 2 = ø 6 mm x 10 mm

Pulse rate
(e.g. 360 pulses=> 0360)

Type of connection
- 1 = Cable axial (PVC, 2 m)
- 2 = Cable radial (PVC, 2 m)

Output and voltage supply
- 1 = Push-pull (without inverted signals)
  5 ... 24 V supply voltage
- 2 = Push-pull (with inverted signals)
  5 ... 24 VDC supply voltage
- 3 = Push-pull (without inverted signals)
  8 ... 30 VDC supply voltage
- 4 = Push-pull (with inverted signals)
  8 ... 30 V supply voltage

Types in stock:

T05.2400.11X2.0050	T05.2400.22X2.0050	X: 1 = Push-pull (without inverted signals)
T05.2400.11X2.0100	T05.2400.22X2.0100	5 ... 24 V supply voltage
T05.2400.11X2.0200	T05.2400.22X2.0360	2 = Push-pull (with inverted signals)
T05.2400.11X2.0360	T05.2400.22X2.0500	5 ... 24 V supply voltage
T05.2400.11X2.0500	T05.2400.22X2.1000	
T05.2400.11X2.1000		
T05.2400.11X2.1024		

Incremental rotary position sensor hollow shaft versions
Miniature Type 2420

- Low price at high performance
- IP64
- Wide temperature range (-20 ... +85 °C)
- Housing is resistant against environmental influences due to chromium plated surface
- Sturdy cable output with multiple clamping
- Temperature compensation
- Broad input voltage range (5 ... 24 V or 8 ... 30 V)
- Highly flexible cable with stands constant flexing at 0 °C ... 70 °C)
- Low power consumption despite high scanning rate
- Reverse connection protected and short-circuit proof

Mechanical characteristics:

Speed:	max. 12000 min^{-1}
Rotor moment of inertia:	appr. 0.1 x 10^{-6} kgm^2
Starting torque:	< 0,001 Nm
Weight:	appr. 0.06 kg
Protection acc. to EN 60 529:	IP64
Working temperature:	-20° C ... +85 °C
Operating temperature:	-20° C ... +90 °C
Shaft:	stainless steel
Shock resistance acc. to DIN-IEC 68-2-27	1000 m/s^2, 6 ms
Vibration resistance acc. to IEC 68-2-6:	100 m/s^2, 55 ... 2000 Hz

Electrical characteristics:

Output circuit:	Push-pull	Push-pull
Supply voltage:	5 ... 24 VDC	8 ... 30 VDC
Power consumption (no load):	max. 50 mA	max. 50 mA
Permissible load/channel:	max. 50 mA	max. 50 mA
Pulse frequency:	max. 160 kHz	max. 160 kHz
Signal level high:	min. U_B = –2.5 V	min. U_B = –3 V
Signal level low:	max. 0.5 V	max. 2,5 V
Rise time t_r:	max. 1 µs	max. 1 µs
Fall time t_f:	max. 1 µs	max. 1 µs
Short circuit proof outputs:	yes	yes
Conforms to CE requirements acc. to EN 50082-2, EN 50081-2 and EN 55011 Class B		

Pulse rates available at short notice:

- Low price at high performance
- IP64
- Wide temperature range (-20 ... +85 °C)
- Housing is resistant against environmental influences due to chromium plated surface
- Sturdy cable output with multiple clamping
- Temperature compensation
- Broad input voltage range (5 ... 24 V or 8 ... 30 V)
- Highly flexible cable with stands constant flexing at 0 °C ... 70 °C)
- Low power consumption despite high scanning rate
- Reverse connection protected and short-circuit proof

Applications:

- Pick and place machines
- Handling machines for electronic components
- Quality testing machines
- Medical machines
- Mail opening and mail stuffing machines
- Check weighers
- Labeling machines
- Mole machines (camera control)

Incremental rotary position sensor hollow shaft versions
Miniature Type 2420

Terminal assignment

Signal:	0V	$+U_B$	A	$\overline{A}$	B	$\overline{B}$	0	$\overline{0}$
Colour:	WH	BN	GN	YE	GY	PK	BU	RD
without inverted signal:	WH	BN	GN		YE		GY	

Insulate unused outputs before initial startup.

Dimensions:

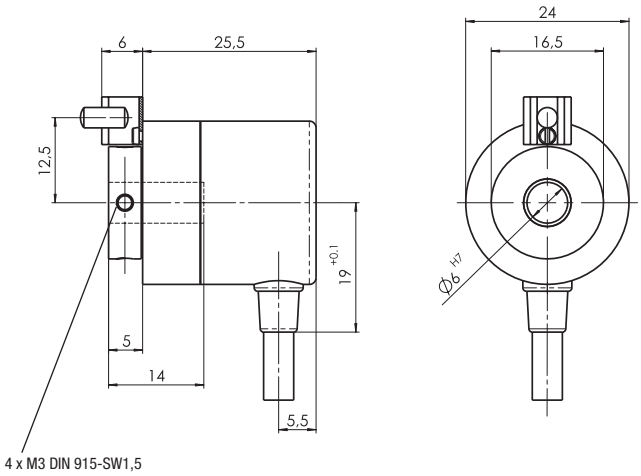

Mounting advice:

Do not connect rotary position sensor and drive rigidly to one another at shafts and flanges! Always use couplings to prevent shaft overload (see chapter accessories).

Order code:

T05.2420.XXXX.XXXX

Range

Flange
1 = ø 24 mm

Blind hole shaft (in depth max. 14 mm)
1 = ø 4 mm
2 = ø 6 mm

Pulse rate
(e.g. 360 pulses=> 0360)

Type of connection
1 = Cable axial (2 m PVC-Cable)
2 = Cable radial (2 m PVC-Cable)

Output and voltage supply
1 = Push-pull (without inverted signals)
5 ... 24 V supply voltage
2 = Push-pull (with inverted signals)
5 ... 24 VDC supply voltage
3 = Push-pull (without inverted signals)
8 ... 30 VDC supply voltage
4 = Push-pull (with inverted signals)
8 ... 30 V supply voltage

Types in stock:

T05.2420.12X2.0050
T05.2420.12X2.0100
T05.2420.12X2.0200
T05.2420.12X2.0360
T05.2420.12X2.0500
T05.2420.12X2.1000
T05.2420.12X2.1024

X: 1 = Push-pull (without inverted signals)
5 ... 24 V supply voltage
2 = Push-pull (with inverted signals)
5 ... 24 V supply voltage

Incremental rotary position sensor shaft versions
Miniature Type 3600

- High-quality miniature model
- High mechanical protection
- Lightweight
- Broad input voltage range (5 V or 10 ... 30 V)
- Highly flexible cable with stands constant flexing from 0 up to 70 °C)
- Low power consumption despite high scanning rate
- Electronic temperature and ageing compensation

Mechanical characteristics:

Speed:	max. 12000 min^{-1}
Rotor moment of inertia:	appr. 0,27 x 10^{-6} kgm^2
Starting torque:	< 0.007 Nm
Radial load capacity of shaft:	15 N
Axial load capacity of shaft::	10 N
Weight:	appr. 0.1 kg
Protection acc. to EN 60 529:	IP66
Working temperature:	0° C ... +70 °C
Operating temperature:	0° C ... +80 °C
Shaft:	stainless steel
Shock resistance acc. to DIN-IEC 68-2-27	1000 m/s^2, 6 ms
Vibration resistance acc. to DIN-IEC 68-2-6:	100 m/s^2, 10 ... 2000 Hz

Pulse rates available at short notice:

15, 50, 60, 90, 100, 180, 200, 250, 300, 314, 360, 400, 500, 600, 625, 635, 720, 900, 1000, 1024, 1080, 1200, 1250, 1500, 1600, 2000, 2500, 3600

Other pulse rates on request

Electrical characteristics:

Output circuit:	RS 422 (TTL-compatible)	Push-pull
Supply voltage:	5 V (±5%) or 10 ... 30 VDC	10 ... 30 VDC
Power consumption (no load) without inverted signal:	not available	typ. 55 mA / max. 125 mA
Power consumption (no load) with inverted signals:	typ. 70 mA / max. 100 mA	typ. 80 mA/ max.150
Permissible load/channel:	max. ±10 mA	max. ±30 mA
Pulse frequency:	max. 125 kHz	max. 100 kHz
Signal level high:	min. 2.5 V	min. U_B-3 V
Signal level low:	max. 0.5 V	max. 2,5 V
Rise time t_r:	max. 200 ns	max. 1 µs
Fall time t_f:	max. 200 ns	max. 1 µs
Short circuit proof outputs::	yes[1)]	no
Conforms to CE requirements acc. to EN 50082-2, EN 50081-2 and EN 55011 Class B		

[1)] Only one channel at a time:
(when U_B = 5V, short-circuit to channel, 0 V, or +U_B is permitted.)
(when U_B = 10 ... 30 V short-circuit to channel or 0 V is permitted.)

Incremental rotary position sensor shaft versions
Miniature Type 3600

Terminal assignment

Signal:	0 V	0 V Sensor[1)]	$+U_B$	$+U_B$ Sensor[1)]	A	$\overline{A}$	B	$\overline{B}$	0	$\overline{0}$	Shield
Colour:	WH	GY PK	BN	BU RD	GN	YE	GY	PK	BU	RD	BK WH

[1)]The sensor cables are connected to the supply voltage internally and if long feeder cables are involved can be used for adjusting or controlling the voltage at the rotary position sensor

- If the sensor cables are not in use, they have to be insulated or 0 VSensor has to be connected to 0 V and $U_{BSensor}$ has to be connected to U_B

- Using RS 422 outputs and long cable distances, a wave impedance has to be applied at each cable end.

Insulate unused outputs before initial startup.

Dimensions:

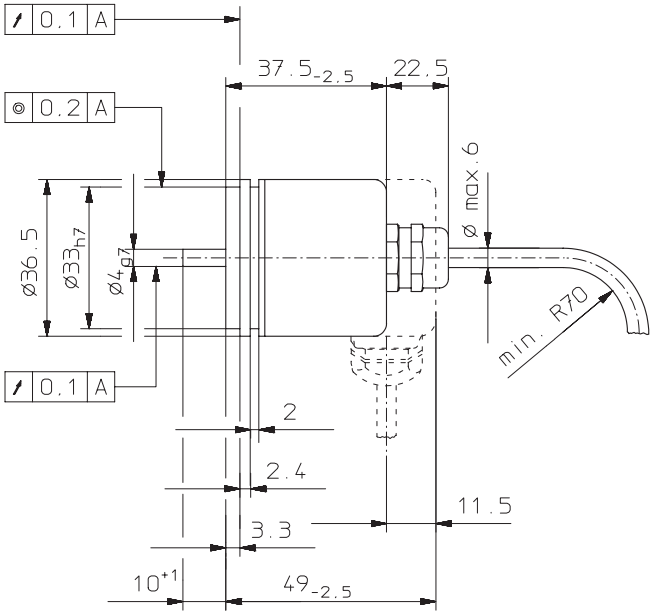

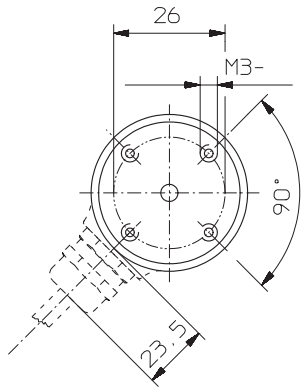

Mounting advice:

Do not connect rotary position sensor and drive rigidly to one another at shafts and flanges! Always use couplings to prevent shaft overload (see accessories chapter).

Order code:

T8.3600.11XX.XXXX

Range

Flange

Shaft (ø x L)
1 = 4 x 10 mm

Pulse rate
(e.g. 250 pulses=> 0250)

Type of connection
1 = Cable axial (1 m PVC-Cable)
2 = Cable radial (1 m PVC-Cable)

Output and voltage supply
1 = RS422:
5 V supply voltage
2 = RS422:
10 ... 30 V supply voltage
3 = Push-pull with inverted signals
10 ... 30 V supply voltage

Incremental rotary position sensor shaft versions
Miniature Type 3700

- Economical version
- Compact size only ø 37 x 32 mm
- Temperature- and ageing compensation
- Short circuit proof outputs
- Resolution up to 2500 ppr; (at production start up to 1024 ppr)
- Protection up to IP67
- Flange and cover made from a new High-Tech-Material (composite material)
- High component integration leeds to low profile design, high performance and economical pricing
- "Tube Tech®" cable outlet guarantees 10x higher strain relief than traditional cabling methods
- Protection IP 67
- 1 ½" (37 mm) diameter housing suitable for replacing resolvers.

Mechanical characteristics:

Speed:	max. 6000 min^{-1}
Rotors moment of inertia:	appr. 0,4 x 10^{-6} kgm^2
Starting torque:	< 0.007 Nm
Radial load capacity of the shaft:	20 N
Axial load capacity of the shaft:	10 N
Weight:	appr. 0.1 kg
Protection acc. to EN 60 529:	bearing, shaft: IP65 cable outlet: IP67
Working temperature:	-20° C up to +70 °C[1)3)]
Operating temperature:	-20° C up to +80 °C[2)3)]
Materials:	shaft: stainless steel; housing, flange: composite PPA, 40% KF (carbon fiber) cable: PVC
Shock resistance acc. to DIN-IEC 68-2-27:	1000 m/s^2, 6 ms
Vibration resistance acc. to DIN-IEC 68-2-6:	100 m/s^2, 10 ... 2000 Hz

1) At push pull output and Supply voltage >15 VDC: max. 55 °C

2) At push pull output and Supply voltage >15 VDC: max. 60 °C

3) Higher temperatures up to 100 °C on request

Pulse rates available at short notice:
10, 50, 60, 100, 180, 200, 250, 300, 360, 400, 500, 512, 600, 1024

Other pulse rates on request

Electrical characteristics:

Output circuit:	RS 422 (TTL-compatible)	Push-pull
Supply voltage:	5 V (±5%)	5 ... 30 VDC
Power consumption (no load)	typ. 70 mA /	typ. 70 mA/
with inverted signal:	max. 100 mA	max.120 mA
Permissible load/channel:	max. ±20 mA	max. ±20 mA
Pulse frequency:	max. 250 kHz	max. 250 kHz
Signal level high:	min. 2.5 V	min. U_B–2.5 V
Signal level low:	max. 0.5 V	max. 0,5 V
Rise time t_r	max. 200 ns	max. 1 µs
Fall time t_f	max. 200 ns	max. 1 µs
Short circuit proof outputs[1)]:	yes[2)]	yes
Reverse connection protection at U_B:	no	no
Conforms to CE requirements acc. to EN 50082-2, EN 50081-2 and EN 55011 Class B		

1) When supply voltage correctly applied

2) Only one channel at a time:
(at U_B = 5 V short circuit to channel, 0 V, or +U_B is permitted).

Applications:

– Substitute for resolvers
– Packaging machines
– Electrical machines
– Vehicles
– Conveyers, elevators
– Semiconducter machines e.g pick & place, cutting ...
– Material handling
– Special machines.

Incremental rotary position sensor shaft versions
Miniature Type 3700

Signal:	0 V	$+U_B$	A	$\overline{A}$	B	$\overline{B}$	0	$\overline{0}$	Shield
Colour:	WH	BN	GN	YE	GY	PK	BU	RD	

Using RS 422 outputs and long cable distances, a wave impedance has to be applied at each cable end.

Insulate unused outputs before initial startup.

Dimensions:

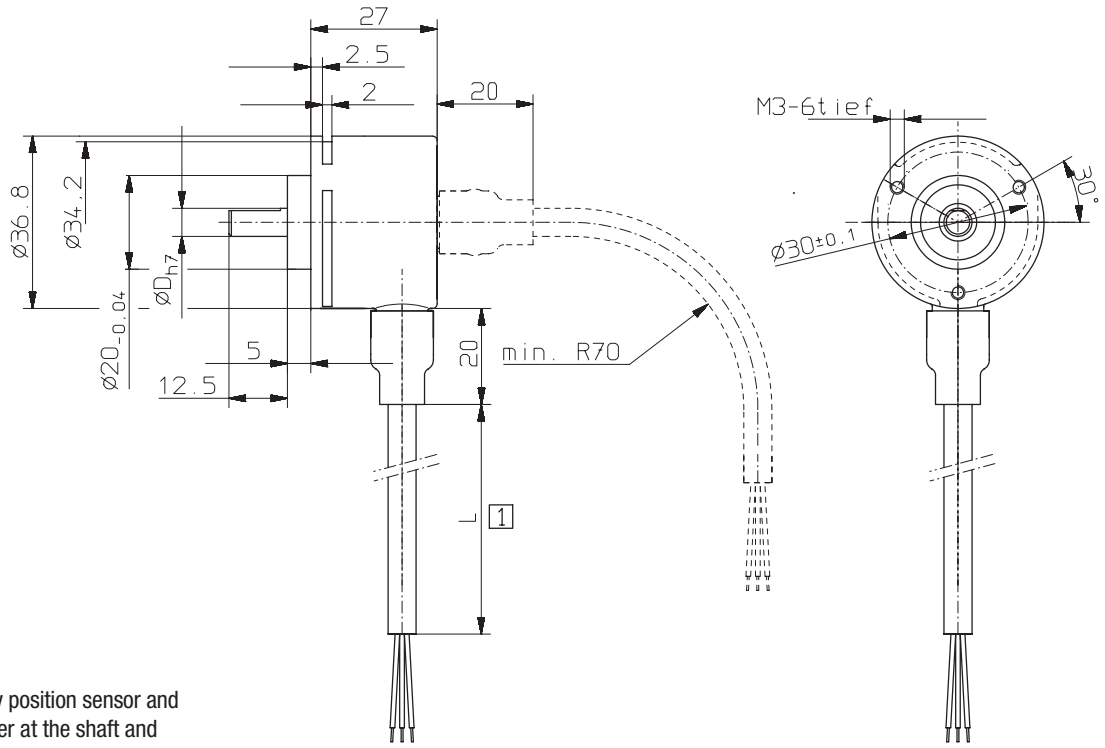

1 Cabel 1, 2, 3 or 5 m long

Mounting advice:

Do not connect the rotary position sensor and drive rigidly to one another at the shaft and flange! Always use a coupling to prevent shaft overload (see chapter accessories).

Order code

T8.3700.XXXX.XXXX

Range

Flange
- 1 = flange

Shaft
- 1 = ø 4 mm
- 2 = ø 5 mm
- 3 = ø 6 mm
- 4 = ø 1/4”
- 6 = ø 8 mm

Pulse rate
(e.g. 250 pulses => 0250)

Type of connection
- 1 = Cable* axial (1 m PVC-cable)
- 2 = Cable* radial (1 m PVC-cable)
- 3 = Cable* axial (2 m PVC-cable)
- 4 = Cable* radial (2 m PVC-cable)
- 5 = Cable* axial (3 m) PVC-cable)
- 6 = Cable* radial (3 m PVC-cable)
- 7 = Cable* axial (5 m PVC-cable)
- 8 = Cable* radial (5 m PVC-cable)

Output and voltage display
- 1 = RS 422: 5 VDC ±5 %
- 2 = push pull with inverted signals: 5 ... 30 VDC

Accessories:

Couplings see rotary position sensor catalogue, chapter accessories

* “Tube Tech®” cable outlet guarantees 10x higher strain relief than traditional cabling methods plus higher IP-Protection.

Other cable lengths on request.

Incremental rotary position sensor hollow shaft versions
Miniature Type 3720

- Economical version
- Compactunit size only ø 37 x 32 mm
- Very easy mounting. The rotary position sensor is mounted directly on the drive shaft without couplings. This saves up to 30% cost and 60% clearance compared to shaft versions.
- Temperature- and ageingcompensation
- Short circuit proof outputs
- Resolution up to 2500 ppr; (at production start up to 1024 ppr)
- Protection up to IP67
- Flange and cover made from a new High-Tech-Material (composite material)
- High component integration leeds to low profile design, high performance and economical pricing
- "Tube Tech®" cable outlet guarantees 10x higher strain relief than traditional cabling methods plus higher IP-Protection.
- Also secures a protection of IP67
- 1 ½" (37 mm) diameter housing suitable for replacing resolvers.

Mechanical characteristics:

Speed:	max. 6000 min^{-1}
Rotors moment of inertia:	appr. 1.4 x 10^{-6} kgm^2
Starting torque:	< 0,01 Nm
Weight:	appr. 0.1 kg
Protection acc. to EN 60 529:	bearing, shaft: IP65 cable outlet: IP67
Working temperature:	-20° C up to +70 °C[1)3)]
Operating temperature:	-20° C up to +80 °C[2)3)]
Materials:	shaft: stainless steel; housing, flange: composite PPA, 40% KF (carbon fiber) cable: PVC
Shock resistance acc. to DIN-IEC 68-2-27:	1000 m/s^2, 6 ms
Vibration resistance acc. to DIN-IEC 68-2-6:	100 m/s^2, 10 ... 2000 Hz

1) At push pull output and Supply voltage > 15 VDC: max. 55 °C
2) At push pull output and Supply voltage >15 VDC: max. 60 °C
3) Higher temperatures up to 100 °C on request

Pulse rates available at short notice:
10, 50, 100, 180, 200, 250, 300, 360, 400, 500, 512, 600, 1024

Other pulse rates on request

Electrical characteristics:

Output circuit:	RS 422 (TTL-compatible)	Push-pull
Supply voltage:	5 V (±5%)	5 ... 30 VDC
Power consumption (no load) with inverted signal:	typ. 70 mA / max. 100 mA	typ. 70 mA/ max.120 mA
Permissible load/channel:	max. ±20 mA	max. ±20 mA
Pulse frequency:	max. 250 kHz	max. 250 kHz
Signal level high:	min. 2.5 V	min. U_B–2,5 V
Signal level low:	max. 0.5 V	max. 0,5 V
Rise time t_r	max. 200 ns	max. 1 µs
Fall time t_f	max. 200 ns	max. 1 µs
Short circuit proof outputs[1)]:	yes[2)]	yes
Reverse connection protection at U_B:	no	no
Conforms to CE requirements acc. to EN 50082-2, EN 50081-2 and EN 55011 Class B		

1) When supply voltage correctly applied
2) Only one channel at a time:
(at U_B = 5 V short circuit to channel, 0 V, or +U_B is permitted).

Applications:
– Substitute for resolvers
– Packaging machines
– Electrical machines
– Vehicles
– Conveyers, elevators
– Semiconducter machines e.g pick & place, cutting ...
– Material handling
– Special machines.

Incremental rotary position sensor hollow shaft versions
Miniature Type 3720

Terminal assignment

Signal:	0 V	$+U_B$	A	$\overline{A}$	B	$\overline{B}$	0	$\overline{0}$	Shield
Colour:	WH	BN	GN	YE	GY	PK	BU	RD	

Using RS 422 outputs and long cable distances, a wave impedance has to be applied at each cable end.

Insulate unused outputs before initial startup.

Dimensions

Short torque stop version;
Long torque stop version is dashed

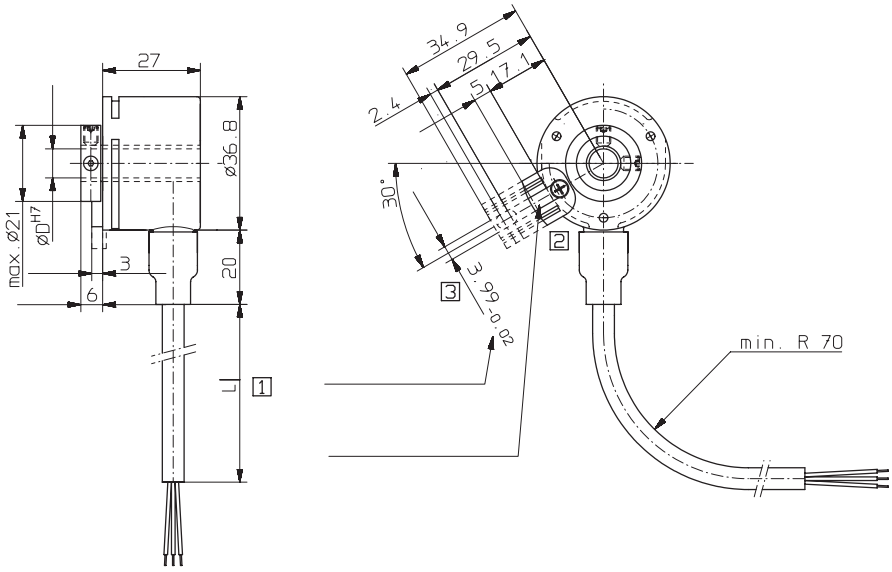

Stator couppling version

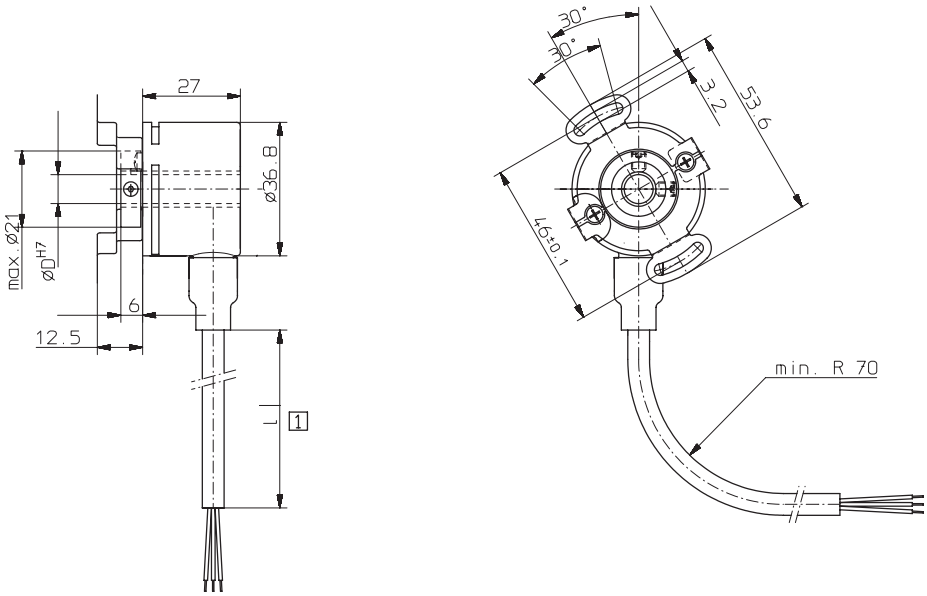

1 cable length 1, 2, 3 or 5 m
2 Slot for support torque, 3 mm deep
3 Recommended pin for long torque stop
Cyl. pin acc. to DIN 7 ø 4 mm

Incremental rotary position sensor hollow shaft versions
Miniature Type 3720

Mounting advice:

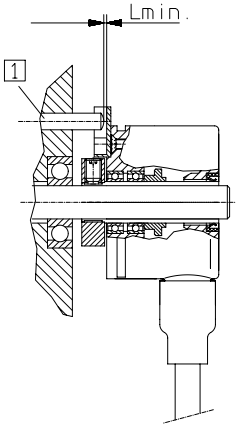

1 Cyl.-pin to DIN 7 ø 4 mm

1) Do not connect the rotary position sensor and drive rigidly to one another at the shaft and flange!

2) To mount a hollow shaft rotary position sensor, we
recommend the use of a pin and with torque stop slot or a stator coupling.

3) When mounting the rotary position sensor ensure that Lmin. is greater than the axial play of the drive.
When using the long torque stop, a greater axial play is possible.

Max. permissible drive shaft impact:
(measuring error ≤ ±0.5 bit and 4 times evaluate in the sequential electronic).

	Mounting with stator coupling		Mounting with torque support
Pulses:	Permissible axial impact	Permissible radial impact	Permissible radial impact
up to 1024:	±0.4 mm	±0.09 mm	±0.075 mm

Order code:

T8.3720.XXXX.XXXX

Range

Flange
- 1 = Hollow shaft with short torque stop
- 2 = Hollow shaft with long torque stop
- 5 = Hollow shaft with stator coupling

Hollow shaft
- 1 = ø 4 mm
- 2 = ø 5 mm
- 3 = ø 6 mm
- 4 = ø 1/4”
- 6 = ø 8 mm

Pulse rate
(e.g. 250 pulses => 0250)

Type of connection
- 1 = Cable* radial (1 m PVC-cable)
- 2 = Cable* radial (2 m PVC-cable)
- 3 = Cable* radial (3 m PVC-cable)
- 4 = Cable* radial (5 m PVC-cable)

Output circuit and Supply voltage
- 1 = RS 422: 5 VDC ±5 %
- 2 = Push pull (with inverted signals) 5 ... 30 VDC

* “**Tube Tech®**” cable outlet guarantees 10x higher strain relief than traditional cabling methods plus higher IP-Protection.

Other cable lengths available on request.

Accessories:
Cyl. pin acc. to DIN 7 ø 4 mm
Art-no.: 8.0014.4700.0000

Incremental rotary position sensor shaft version
Universal Type 5800

- Sturdy model to industry standard, Ø58 mm housing
- Many variations, also customized versions
- IP65
- Temperature and ageing compensation
- Short-circuit proof outputs
- Reverse connection protection (at U_B= 10 ... 30 VDC)
- Highly flexible PUR-cable
- Resolution up to 5000 ppr
- High shaft load

Mechanical characteristics:

Speed:	max. 12000 min^{-1}
Rotor moment of inertia:	appr. 1.8 x 10^{-6} kgm^2
Starting torque:	< 0.01 Nm
Radial load capacity of shaft*:	80 N
Axial load capacity of shaft:*:	40 N
Weight:	appr. 0.4 kg
Protection acc. to EN 60 529:	IP65
Working temperature:	-20 °C ... +85 °C[1)]
Operating temperature:	-20 °C ... +90 °C[1)]
Shaft:	stainless steel
Shock resistance acc. to DIN-IEC 68-2-27	1000 m/s^2, 6 ms
Vibration resistance acc. to IEC 68-2-6:	100 m/s^2, 10...2000 Hz

[1)]Constant trailing: -20 ... +70 °C

Pulse rates available at short notice:

15, 50, 60, 90, 100, 180, 200, 250, 300, 314, 360, 400, 500, 600, 625, 635, 720, 900, 1000, 1024, 1080, 1200, 1250, 1500, 1600, 2000, 2500, 3600

Other pulse rates on request

Electrical characteristics:

Output circuit:	RS 422 (TTL-compatible)	RS 422 (TTL-compatible)	Push-pull	Push-pull
Supply voltage:	5 V (±5%) or 10 ... 30 VDC	5 ... 30 VDC	10 ... 30 VDC	5 ... 30 VDC
Power consumption (no load) without inverted signal:	not available	not available	typ. 55 mA / max. 125 mA	typ. 55 mA / max. 125 mA
Power consumption (no load) with inverted signals:	typ. 70 mA / max. 100 mA	typ. 70 mA / max. 100 mA	typ. 80 mA/ max.150 mA	typ. 80 mA/ max.150 mA
Permissible load/channel:	max. ±20 mA	max. ±20 mA	max. ±30 mA	max. ±30 mA
Pulse frequency:	max. 300 kHz	max. 300 kHz	max. 300 kHz	max. 300 kHz
Signal level high:	min. 2.5 V	min. 2.5 V	min. UB-3 V	min. UB-1.5 V
Signal level low:	max. 0.5 V	max. 0.5 V	max. 2.5 V	max. 1.5 V
Rise time t_r	max. 200 ns	max. 200 ns	max. 1 µs	max. 1 µs
Fall time t_f	max. 200 ns	max. 200 ns	max. 1 µs	max. 1 µs
Short circuit proof outputs:[1)]:	yes[2)]	yes2)	yes	yes
Reverse connection protection at U_B:	5 V: no, 1 0 ... 30 V: yes	ja	yes	no
Conforms to CE requirements acc. to EN 50082-2, EN 50081-2 and EN 55011 Class B				

[1)]When supply voltage correctly applied
[2)]Only one channel at a time:
(when U_B = 5 V, short-circuit to channel, 0 V, or +U_B is permitted.)
(when U_B = 10 ... 30 V short-circuit to channel or 0 V is permitted.)

Incremental rotary position sensor shaft version
Universal Type 5800

Terminal assignment

Signal:	0 V	0 V Sensor[2)]	$+U_B$	$+U_B$ Sensor[2)]	A	$\overline{A}$	B	$\overline{B}$	0	$\overline{0}$	Shield
12 pin. Connector, Pin:	10	11	12	2	5	6	8	1	3	4	PH[1)]
7 pin. Connector, Pin:	F	–-	D	E	A	–	B	–	C	-	G
10 poin. Connector, Pin:	F	-	D	E	A	G	B	H	C	I	J
Cable colour:	WH 0,5 mm²	WH or. GY PK	BN 0,5 mm²	BN or. RD BU	GN	YE	GY	PK	BU	RD	

[1)] PH = Shield is attached to connector housing

[2)] The sensor cables are connected to the supply voltage internally if long feeder cables are involved they can be used to adjust or controll the voltage at the rotary position sensor

- If the sensor cables are not in use, they have to be insulated or $0\ V_{Sensor}$ has to be connected to 0 V and $U_{BSensor}$ has to be connected to U_B
- Using RS 422 outputs and long cable distances, a wave impedance has to be applied at each cable end.

Insulate unused outputs before initial startup.

Dimensions:

Clamping flange ø 58

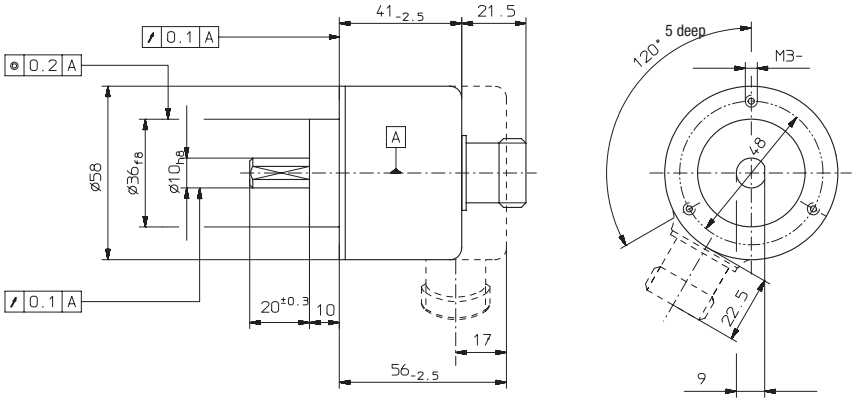

Mounting advice:
Do not connect rotary position sensor and drive rigidly to one another at shafts and flanges! Always use couplings to prevent shaft overload (see accessories chapter).

Synchronous flange ø 58

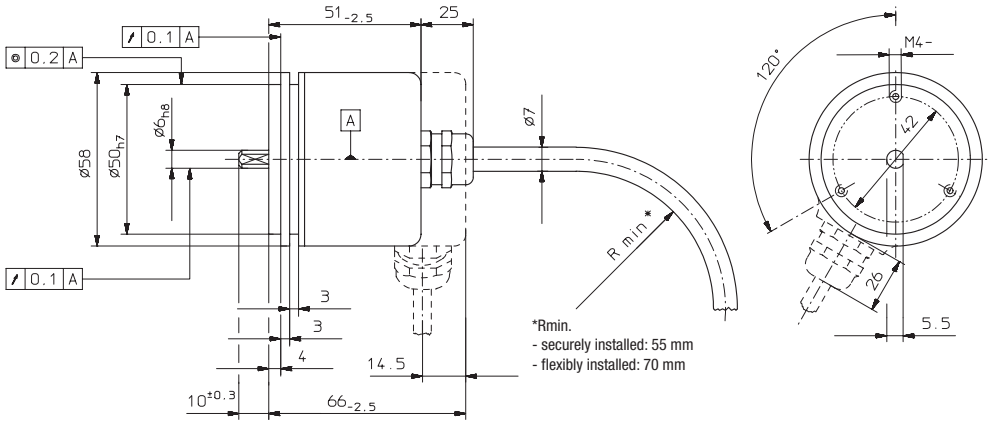

Synchronous flange ø 63,5 (2,5”)

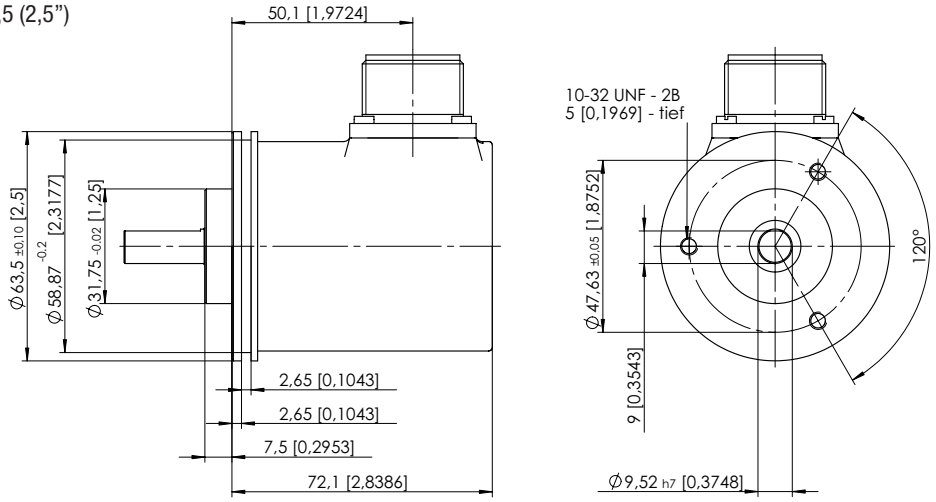

Incremental rotary position sensor shaft version
Universal Type 5800

Retangular flange 63,5 (2,5“)

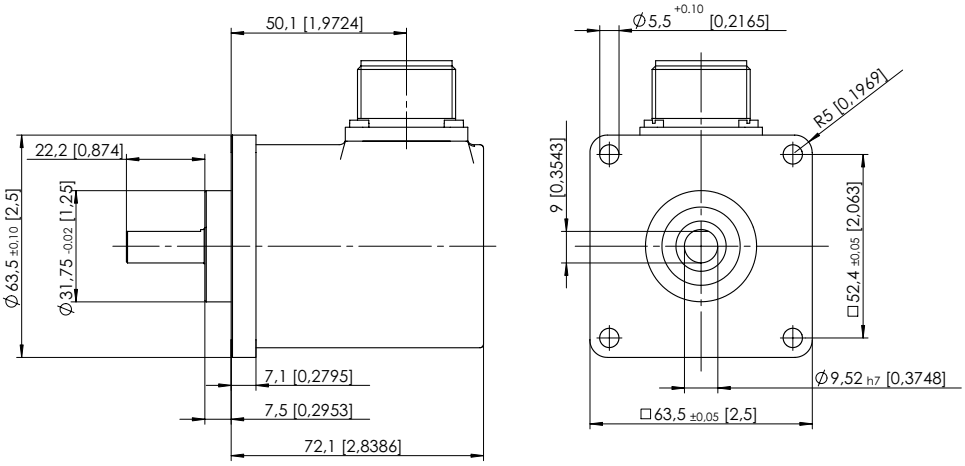

Top view of mating side, male contact base:

12 pin plug

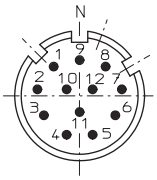

7 pin plug

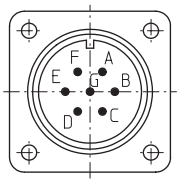

10 pin plug

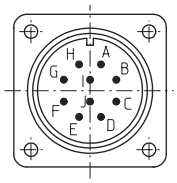

Order code: **T8.5800.XXXX.XXXX**

Range

Flange
- 1 = Clamping flange ø 58
- 2 = Synchronous flange ø 58
- M = Rectangular flange 6.5 (2.5”)
- P = Synchronous flange ø 63.5 (2.5”)

Shaft (ø x L)
- 1 = ø 6 mm x 10 mm
- 2 = ø 10 mm x 20 mm
- P*= ø 9.52 mm x 22,2 mm (3/8” x 7/8”)

(*only with Flange M or P

Type of connection and supply voltage
- 4 = RS 422 (with inverted signal) 5 V supply voltage
- 5 = RS 422 (with inverted signal) 10 ... 30 V supply voltage
- 6 = Push-pull (with inverted signal) 10 ... 30 V supply voltage
- 7 = Push-pull (without inverted signal) 10 ... 30 V supply voltage
- 8 = Push-pull (without inverted signal) 5 ... 30 V supply voltage
- 9 = Push-pull (with inverted signal) 5 ... 30 V supply voltage
- Y = RS 422 (with inverted signal) 5 ... 30 V Supply voltage

Pulse rate
(e.g. 250 pulses=> 0250)

Type of connection
- 1 = Cable axial (1 m PUR-Cable)
- 2 = Cable radial (1 m PUR-Cable)
- 3 = axial 12 pin plug without mating connector
- 5 = radial 12 pin plug without mating connector
- W[1)] = 7 pin plug, "MIL"-specified without mating connector, radial
- Y = 10 pin plug, "MIL"-specified without mating connector, radial

[1)]only with output 7

Accessories:

Corresponding mating connector to connection type 3 or 5
Art.-no. T8.0000.5012.0000

Corresponding mating connector to connection type W:
Art.-no. T8.0000.5052.0000

Corresponding mating connector to connection type Y:
Art.-no. T8.0000.5062.0000

Incremetal rotary position sensor shaft version
Preferred Type 5802

- Many types in stock
- Sturdy model to industry standard, Ø58 mm housing
- Prefered model features limited, version at economic pricing
- Temperature and ageing compensation
- Short-circuit proof outputs
- Resolution up to 5000 ppr
- High scanning rate

Mechanical characteristics:

Speed:	max. 12000 min^{-1}
Rotor moment of inertia:	appr. 1,8 x 10^{-6} kgm^2
Starting torque:	< 0.01 Nm
Radial load capacity of shaft*:	80 N
Axial load capacity of shaft:*:	40 N
Weight:	appr. 0.4 kg
Protection acc. to EN 60 529:	IP65
Working temperature:	-20 °C ... +70 °C
Operating temperature:	-20 °C ... +75 °C
Shaft:	stainless steel
Shock resistance acc. to DIN-IEC 68-2-27	1000 m/s^2, 6 ms
Vibration resistance acc. to DIN-IEC 68-2-6:	100 m/s^2, 10...2000 Hz

Pulse rates available at short notice:

10, 20, 25, 30, 50, 60, 100, 120, 125, 127, 150, 180, 200, 216, 240, 250, 254, 256, 300, 314, 360, 375, 400, 500, 512, 600, 625, 720, 745, 750, 762, 800, 900, 927, 1000, 1024, 1250, 1270, 1400, 1500, 1800, 2000, 2048, 2250, 2400, 2500, 3000, 3600, 4000, 4096, 5000

Other pulse rates on request

Electrical characteristics:

Output circuit:	RS 422 (TTL-compatible)	Push-pull	Push-pull
Supply voltage:	5 V (±5 %) or	10 ... 30 VDC	5 ... 30 VDC
Power consumption (no load) without inverted signal:	not available	typ. 55 mA / max. 125 mA	typ. 55 mA / max. 125 mA
Power consumption (no load) with inverted signals:	typ. 70 mA / max. 100 mA	typ. 80 mA/ max. 150 mA	Typ. 80 mA max. 150 mA
Permissible load/channel:	max. ±20 mA	max. ±30 mA	max. ±30 mA
Pulse frequency:	max. 300 kHz	max. 300 kHz	max. 300 kHz
Signal level high:	min. 2.5 V	min. U_B–3 V	min. U_B–1.5 V
Signal level low:	max. 0.5 V	max. 2.5 V	max. 1.5 V
Rise time t_r	max. 200 ns	max. 1 µs	max. 1 µs
Fall time t_f	max. 200 ns	max. 1 µs	max. 1 µs
Short circuit proof outputs:[1]:	yes[2]	yes	yes
Reverse connection protection at U_B:	no	yes	no
Conforms to CE requirements acc. to EN 50082-2, EN 50081-2 and EN 55011 Class B			

[1] When supply voltage correctly applied

[2] Only one channel at a time: (when U_B = 5 V, short-circuit to channel, 0 V, or +U_B is permitted.)
(when U_B=10 ... 30 V short-circuit to channel or 0 V is permitted.)

Incremetal rotary position sensor shaft version
Preferred Type 5802

Terminal assignment

Signal:	0V	0V Sensor[2)]	$+U_B$	$+U_B$ Sensor[2)]	A	$\overline{A}$	B	$\overline{B}$	0	$\overline{0}$	Shield
12 pin plug, Pin:	10	11	12	2	5	6	8	1	3	4	PH[1)]
7 pin plug, Pin:	F	–	D	E	A	–	B	–	C	–	G
10 pin plug, Pin:	F	–	D	E	A	G	B	H	C	I	J
Cable colour:	WH 0,5 mm²	WH or. GY PK	BN 0,5 mm²	BN or. RD BU	GN	YE	GY	PK	BU	RD	

1)PH = Shield is attached to connector housing

2)The sensor cables are connected to the supply voltage internally if long feeder cables are involved they can be used to adjust or controll the voltage at the rotary position sensor

- If the sensor cables are not in use, they have to be insulated or $0\,V_{Sensor}$ has to be connected to 0 V and $U_{BSensor}$ has to be connected to U_B
- Using RS 422 outputs and long cable distances, a wave impedance has to be applied at each cable end.

Insulate unused outputs before initial startup..

Dimensions:

Clamping flange ø 58

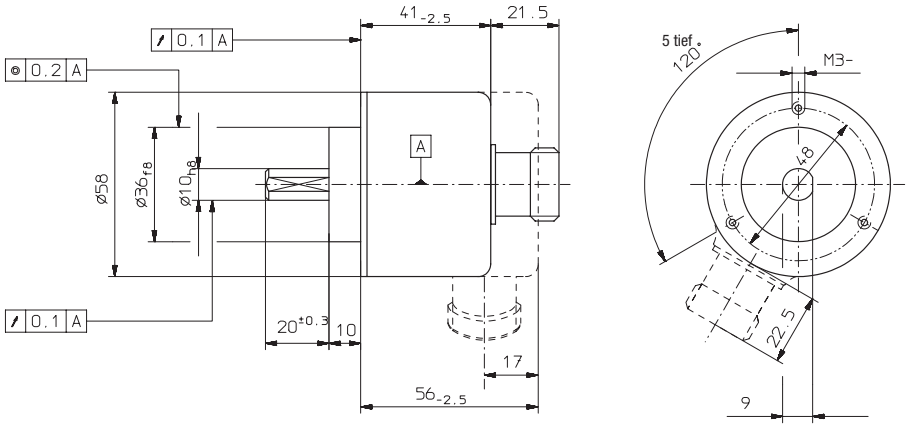

Synchronous flange ø 58

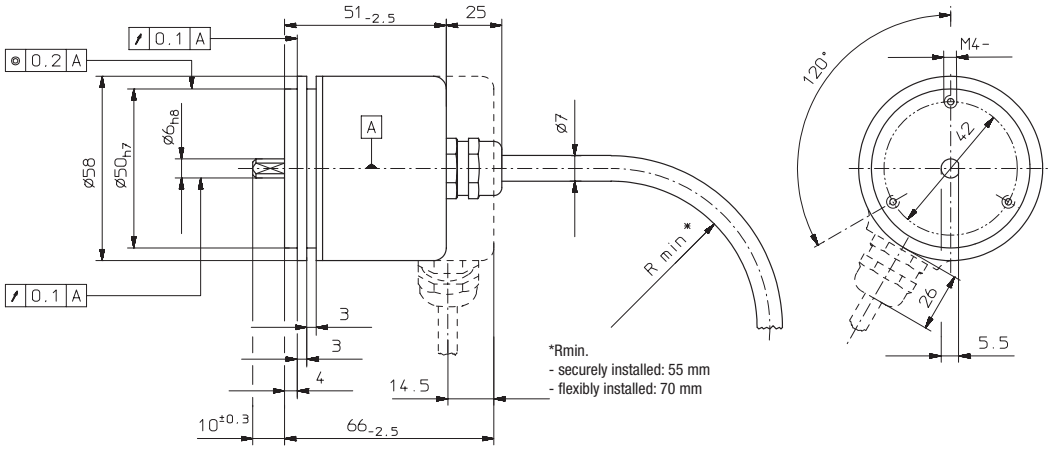

Synchronous flange ø 63,5 (2,5")

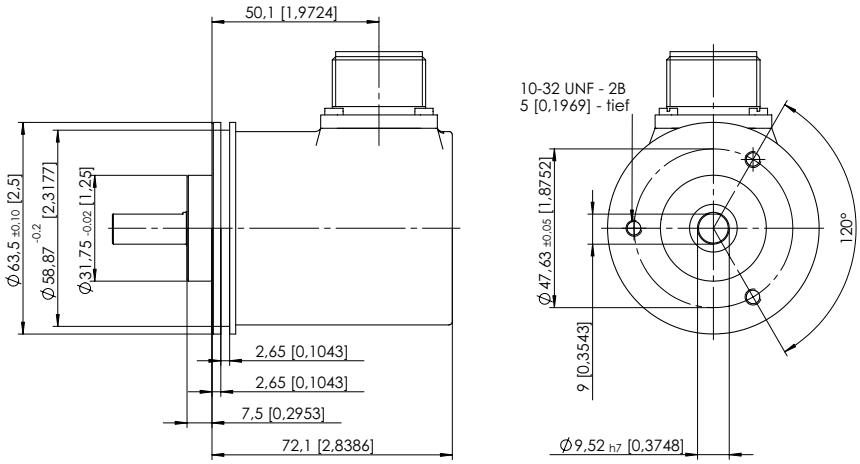

Mounting advice:
Do not connect rotary position sensor and drive rigidly to one another at shafts and flanges! Always use couplings to prevent shaft overload (see accessories chapter).

Incremetal rotary position sensor shaft version
Preferred Type 5802

Rectangular flange 6.5 (2.5“)

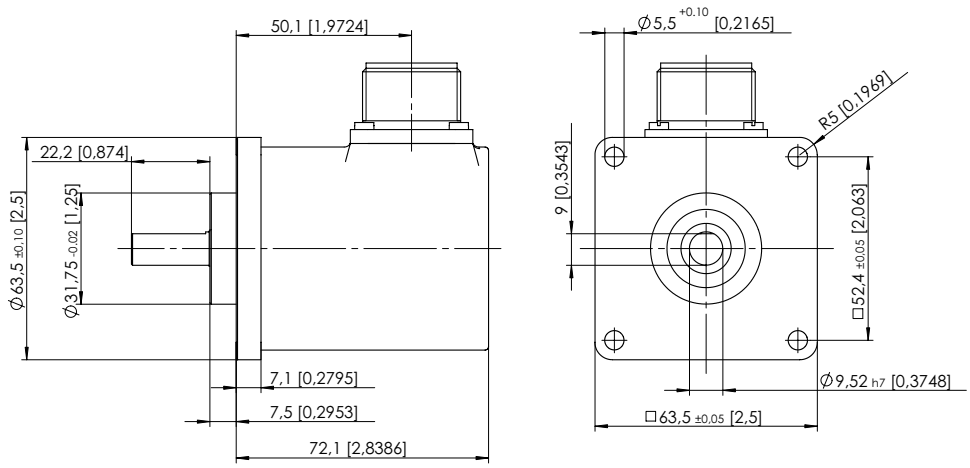

Top view of mating side, mal contact base:

12 pin plug

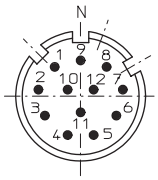

7 pin plug

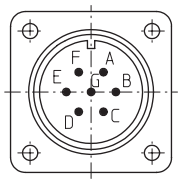

10 pin plug

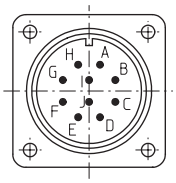

Order code:

T8.5802.XXXX.XXXX

Range

Flange and Shaft
- 12 = Clamping flange with Shaft ø 10 x 20 mm
- 21 = Synchronous flange with Shaft ø 6 x 10 mm
- MP = Rectangular flange with Shaft ø 9.52 x 22.2 (3/8“ x 7/8“)
- M2 = Rectangular flange with Shaft ø 10 x 20
- PP = Synchronous flange ø 63,5 with Shaft ø 9.52 x 22,2 (3/8“ x 7/8“)
- P2 = Synchronous flange ø 63.5 with Shaft ø 10 x 20

Output circuit and supply voltage
- 4 = RS 422 (with inverted signal) 5 V supply voltage
- 7 = Push-pull (without inverted signal) 10 ... 30 V supply voltage
- 8 = Push-pull (without inverted signal) 5 ... 30 V Supply voltage

Pulse rate
(e.g. 250 pulses=> 0250)

Type of connection
- 1 = Cable axial (1 m PVC-Cable)
- 2 = Cable radial (1 m PVC-Cable)
- 3 = axial 12 pin plug without mating connector
- 5 = radial 12 pin connector without mating connector
- W[1] = 7-pin plug, "MIL"-specified without mating connector, radial
- Y = 10pin plug, "MIL"-specified without mating connector, radial

[1]only with output 7+8

Types in stock:

T8.5802.1275.0200	T8.5802.2143.3600
T8.5802.1275.0500	T8.5802.2143.5000
T8.5802.1275.1000	T8.5802.2173.1000
T8.5802.2143.1000	T8.5802.2173.1024
T8.5802.2143.1024	T8.5802.2173.2500
T8.5802.2143.2500	T8.5802.2173.3600
	T8.5802.2173.5000

Accessories:

Corresponding mating connector to connection type 3 or 5
Art.-no. T8.0000.5012.0000

Corresponding mating connector to connection type W:
Art.-no. T8.0000.5052.0000

Corresponding mating connector to connection type Y:
Art.-no. T8.0000.5062.0000

Further accessories see accessories chapter

Incremental rotary position sensor shaft version
High temperature Type 5803

- High temperature version, up to 110 °C (higher temperatures on request). Application e.g. drive technology.
- Many variations, also customized versions
- Temperature and ageing compensation
- Short-circuit proof outputs
- Reverse connection protection (at U_B= 10 ... 30 VDC)
- Resolution up to 5000 ppr
- High shaft load

Mechanical characteristics:

Speed:	max. 12000 min^{-1}
Rotor moment of inertia:	appr. 1,8 x 10^{-6} kgm^2
Starting torque:	< 0.01 Nm
Radial load capacity of shaft*:	80 N
Axial load capacity of shaft:*:	40 N
Weight:	appr. 0.4 kg
Protection acc. to EN 60 529:	IP65
Working temperature:	-20 °C ... +105 °C[1)]
Operating temperature:	-20 °C ... +110 °C[1)]
Shaft:	stainless steel
Shock resistance acc. to DIN-IEC 68-2-27	1000 m/s^2, 6 ms
Vibration resistance acc. to IEC 68-2-6:	100 m/s^2, 10 ... 2000 Hz

[1)]Constant trailing: -20 ... +70 °C

Pulse rates available at short notice:
10, 20, 25, 30, 50, 60, 100, 120, 125, 127, 150, 180, 200, 216, 240, 250, 254, 256, 300, 314, 360, 375, 400, 500, 512, 600, 625, 720, 745, 750, 762, 800, 900, 927, 1000, 1024, 1250, 1270, 1400, 1500, 1800, 2000, 2048, 2250, 2400, 2500, 3000, 3600, 4000, 4096, 5000

Other pulse rates on request

Electrical characteristics:

Output circuit:	RS 422 (TTL-compatible)	Push-pull
Supply voltage:	5 V (±5%) or 10 ... 30 VDC 10 ... 30 VDC	
Power consumption (no load) without inverted signal:	–	typ. 55 mA / max. 125 mA
Power consumption (no load) with inverted signals:	typ. 70 mA / max. 100 mA	typ. 80 mA/ max.150
Permissible load/channel:	max. ±20 mA	max. ±30 mA
Pulse frequency:	max. 300 kHz	max. 300 kHz
Signal level high:	min. 2.5 V	min. U_B-3 V
Signal level low:	max. 0.5 V	max. 2.5 V
Rise time t_r	max. 200 ns	max. 1 µs
Fall time t_f	max. 200 ns	max. 1 µs
Short circuit proof outputs:[1)]	yes[2)]	yes
Reverse connection protection at UB:	5 V: no 10 ... 30 V: yes	yes
Conforms to CE requirements acc. to EN 50082-2, EN 50081-2 and EN 55011 Class B		

[1)]When supply voltage correctly applied
[2)]Only one channel at a time: (when U_B= 5 V, short-circuit to channel, 0 V, or +U_B is permitted.)
(when U_B= 10 ...30 V short-circuit to channel or 0 V is permitted.)

Incremental rotary position sensor shaft version
High temperature Type 5803

Terminal assignment

Signal:	0V	0V Sensor[2)]	$+U_B$	$+U_B$ Sensor[2)]	A	$\overline{A}$	B	$\overline{B}$	0	$\overline{0}$	Shield
12 pin plug, Pin:	10	11	12	2	5	6	8	1	3	4	PH[1)]
7 pin plug, Pin:	F	–	D	E	A	–	B	–	C	–	G
10 pin plug, Pin:	F	–	D	E	A	G	B	H	C	I	J
Cable colour:	WH 0,5 mm²	WH or GY PK	BN 0,5 mm²	BN or RD BU	GN	YE	GY	PK	BU	RD	

[1)] PH = Shield is attached to connector housing

[2)] The sensor cables are connected to the supply voltage internally if long feeder cables are involved they can be used to adjust or controll the voltage at the rotary position sensor

- If the sensor cables are not in use, they have to be insulated or 0 V_{Sensor} has to be connected to 0 V and $U_{BSensor}$ has to be connected to U_B

- Using RS 422 outputs and long cable distances, a wave impedance has to be applied at each cable end.

Insulate unused outputs before initial startup.
Unbenutzte Ausgänge sind vor Inbetriebnahme zu isolieren.

Dimensions:

Clamping flange ø 58

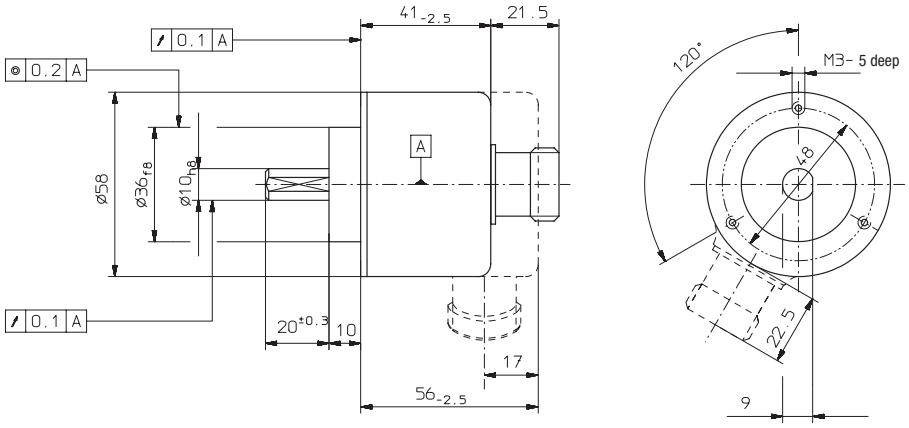

Synchronous flange ø 58

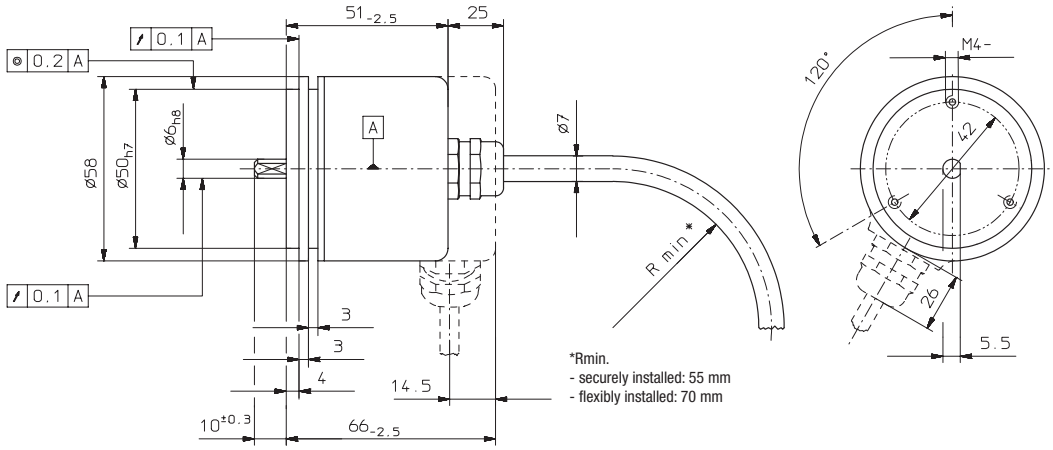

Synchronous flange ø 63.5 (2.5”)

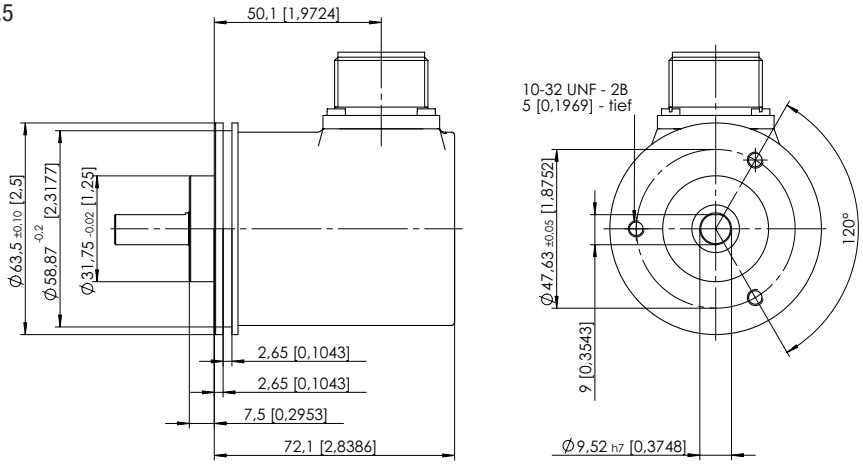

Mounting advice:
Do not connect rotary position sensor and drive rigidly to one another at shafts and flanges! Always use couplings to prevent shaft overload (see accessories chapter).

Incremental rotary position sensor shaft version
High temperature Type 5803

Rectangular flange 63.5 (2.5“)

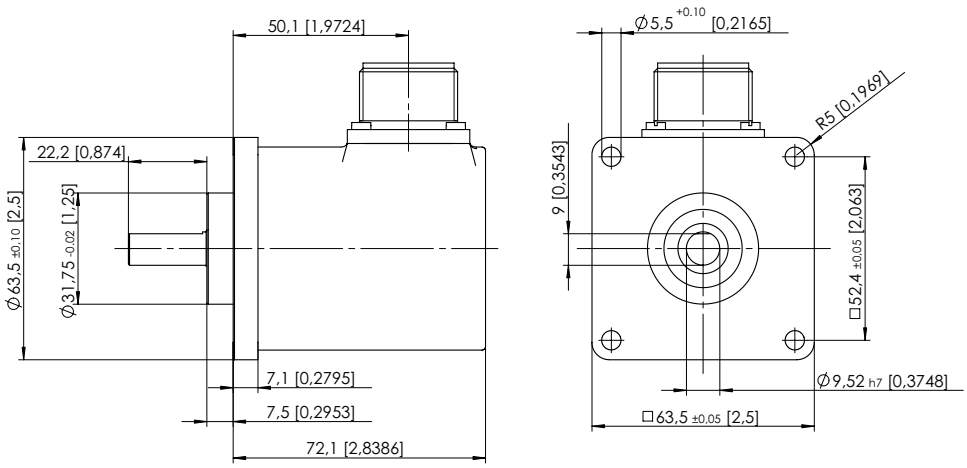

Top view of mating side, male contact base::

12 pin plug

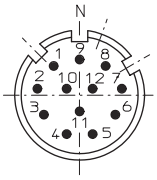

7 pin plug

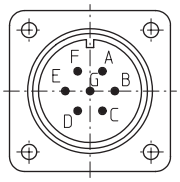

10 pin plug

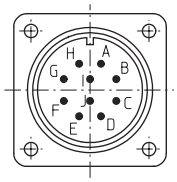

Order code:

T8.5803.XXXX.XXXX

Range

Flange
- 1 = Clamping flange ø 58
- 2 = Synchronous flange ø 58
- M = Rectangular flange □ 63.5 (2.5”)
- P = Synchronous flange ø 63.5 (2.5”)

Shaft
- 1 = ø 6 mm x 10 mm
- 2 = ø 10 mm x 20 mm
- P* = ø 9.52 mm x 22.2 mm (3/8” x 7/8”)

*only with flange M or P

Type of connection and supply voltage
- 4 = RS 422 (with inverted signal) 5 V supply voltage
- 5 = RS 422 (with inverted signal) 10 ... 30 V supply voltage
- 6 = Push-pull (with inverted signal) 10 ... 30 V supply voltage
- 7 = Push-pull (without inverted signal) 10 ... 30 V Supply voltage

Pulse rate
(e.g. 250 pulses=> 0250)

Type of connection
- 1 = Cable axial (1 m TPE-Cable)
- 2 = Cable radial (1 m TPE-Cable)
- 3 = axial 12 pin plug without mating connector
- 5 = radial 12 pim plug without mating connector
- W[1)] = 7-pin plug, "MIL"-specified without mating connector, radial
- Y = 10 pin plug, "MIL"-specified without mating connector, radial

[1)]only with output 7

Accessories:

Corresponding mating connector to
Type of connection 3 or 5
Art.-no. T8.0000.5012.0000

Corresponding mating connector to
Type of connection W:
Art.-no. T8.0000.5052.0000

Corresponding mating connector to
Type of connection Y:
Art.-no. T8.0000.5062.0000

Further accessories see accessories chapter

Incremental rotary position sensor shaft version
Sine wave output Type 5804

- Sturdy model to industry standard, Ø58 mm housing
- Many variations, also customized versions
- IP65
- Temperature and ageing compensation
- Short-circuit proof outputs
- Reverse connection protection (at U_B= 10 ... 30 VDC)
- Resolution up to 5000 ppr
- Voltage sine wave outputs (1Vpp

Mechanical characteristics:

Speed:	max. 12000 min^{-1}
Rotor moment of inertia:	appr. 1,8 x 10^{-6} kgm^2
Starting torque:	< 0.01 Nm
Radial load capacity of shaft*:	80 N
Axial load capacity of shaft:*:	40 N
Weight:	appr. 0.4 kg
Protection acc. to EN 60 529:	IP65
Working temperature:	-20 °C ... +85 °C[1)]
Operating temperature:	-20 °C ... +90 °C[1)]
Shaft:	stainless steel
Shock resistance acc. to DIN-IEC 68-2-27	1000 m/s^2, 6 ms
Vibration resistance acc. to DIN-IEC 68-2-6:	100 m/s^2, 10 ... 2000 Hz

[1)]Constant trailing: -20 ... +70 °C

Pulse rates available at short notice:
500, 512, 600, 625, 720, 745, 750, 762, 800, 900, 927, 1000, 1024, 1250, 1270, 1400, 1500, 1800, 2000, 2048, 2250, 2400, 2500, 3000, 3600, 4000, 4096, 5000

Other pulse rates on request

Electrical characteristics:

Output circuit:	Sine wave U = 1 Vpp	Sine wave U = 1 Vpp
Supply voltage:	5 V (±5%)	10 ... 30 VDC
Current consumption (no load) with inverted signals:	typ. 65 mA / max. 110 mA	typ. 65 mA / max. 110 mA
-3 dB frequency:	≥ 180 kHz	≥ 180 kHz
Signal level channels A/B:	1 Vpp (±20%)	1 Vpp (±20%)
Signal level channel 0:	0.1 ... 1.2 V	0.1 ... 1.2 V
Short circuit proof outputs:[1)]:	yes	yes
Reverse connection protection at UB:	no	yes
Conforms to CE requirements acc. to EN 50082-2, EN 50081-2 and EN 55011 Class B		

[1)]When supply voltage correctly applied

Incremental rotary position sensor shaft version
Sine wave output Type 5804

Terminal assignment voltage sine wave output:

Signal:	0V	0V Sensor[2)]	+UB	+UB Sensor[2)]	A	$\overline{A}$	B	$\overline{B}$	0	$\overline{0}$	Shield
12 pin plug, Pin:	10	11	12	2	5	6	8	1	3	4	PH[1)]
Cable colour:	WH 0,5 mm²	WH or GY PK	BN 0,5 mm²	BN or RD BU	GN	YE	GY	PK	BU	RD	

[1)] PH = Shield is attached to connector housing

[2)] The sensor cables are connected to the supply voltage internally if long feeder cables are involved they can be used to adjust or controll the voltage at the rotary position sensor

- If the sensor cables are not in use, they have to be insulated or V_{Sensor} has to be connected to 0 V and $U_{BSensor}$ has to be connected to U_B

Insulate unused outputs before initial startup.

Dimensions:

Clamping flange ø 58

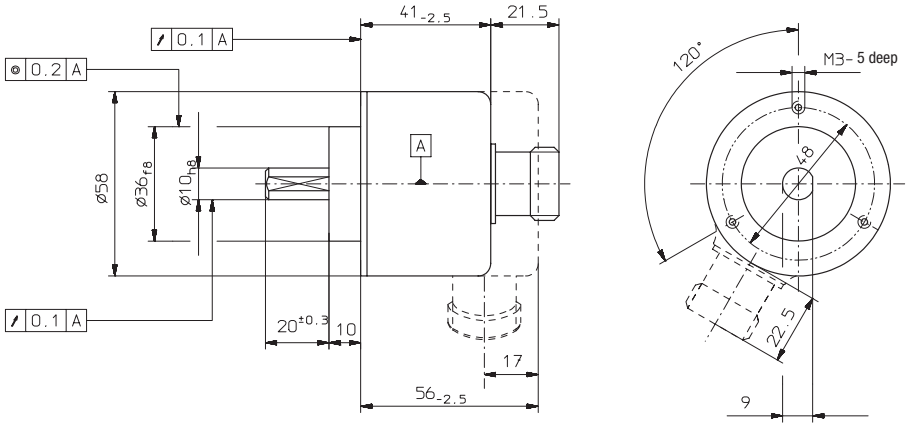

Synchronous flange ø 58

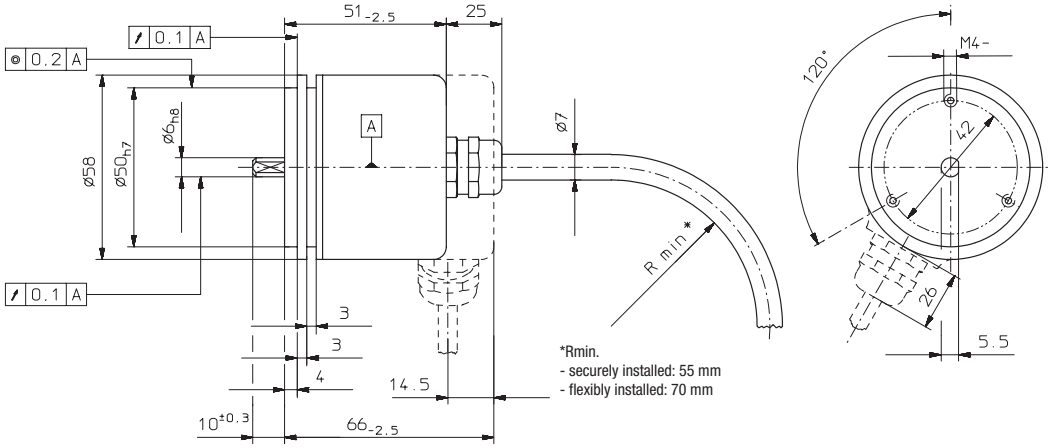

Mounting advice:

Do not connect rotary position sensor and drive rigidly to one another at shafts and flanges!
Always use couplings to prevent shaft overload (see accessories chapter).

Incremental rotary position sensor shaft version
Sine wave output Type 5804

Top view of mating side, male contact base:

12 pin plug

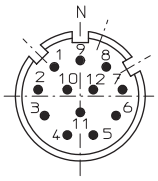

Order code:

T8.5804.XXXX.XXXX

Range

Flange
- 1 = Clamping flange ø 58
- 2 = Synchronous flange ø 58

Shaft
- 1 = ø 6 mm x 10 mm
- 2 = ø 10 mm x 20 mm

Type of connection and supply voltage
- 1 = Sinus, 1 Vpp (with inverted signal) 5 V supply voltage
- 2 = Sinus, 1 Vpp (with inverted signal) 10 ... 30 V Supply voltage

Pulse rate
(e.g. 250 pulses=> 0250)

Type of connection
- 1 = Cable axial (1 m TPE-Cable)
- 2 = Cable radial (1 m TPE-Cable)
- 3 = axial 12 pin plug without mating connector
- 5 = radial 12 pin plug without mating connector

Accessories:

Corresponding mating connector of connection type 3 or 5: Art.-no. T8.0000.5012.0000

Further accessories see accessories chapter

Incremental rotary position sensor shaft version
High resolution Type 5805

- Sturdy model to industry standard, Ø58 mm housing
- Resolution up to 36000 ppr (internally interpolated)
- Pulse frequency up to 800 kHz
- IP65
- Temperature and ageing compensation
- Short-circuit proof outputs
- Reverse connection protection (at U_B= 10 ... 30 VDC)
- Highly flexible PUR-cable
- High shaft load
- Many variations, also customized versions
- Alarm output (optional)

Mechanical characteristics:

Speed:	max. 12000 min^{-1}
Rotor moment of inertia:	appr. 1,8 x 10^{-6} kgm^2
Starting torque:	< 0.01 Nm
Radial load capacity of shaft*:	80 N
Axial load capacity of shaft:*:	40 N
Weight:	appr. 0.4 kg
Protection acc. to EN 60 529:	IP65
Working temperature:	-20 °C ... +85 °C[1)]
Operating temperature:	-20 °C ... +90 °C[1)]
Shaft:	stainless steel
Shock resistance acc. to DIN-IEC 68-2-27	1000 m/s^2, 6 ms
Vibration resistance acc. to IEC 68-2-6:	100 m/s^2, 10 ... 2000 Hz

[1)]Constant trailing: -20 ... +70 °C

Pulse rates available at short notice:
6000, 7200, 8000, 8192, 9000, 10000, 18000, 25000, 36000

Other pulse rates on request

Electrical characteristics:

Output circuit:	RS 422 (TTL-compatible)	Push-pull
Supply voltage:	5 V (±5%) or 10 ... 30 VDC 10 ... 30 VDC	
Power consumption (no load) without inverted signal:	not available	typ. 90 mA / max. 135 mA
Power consumption (no load) with inverted signals:	typ. 70 mA / max. 100 mA	typ. 115 mA/ max.160 mA
Permissible load/channel:	max. ±20 mA	max. ±30 mA
Pulse frequency:	max. 800 kHz	max. 600 kHz
Signal level high:	min. 2.5 V	min. U_B – 3 V
Signal level low:	max. 0.5 V	max. 2.5 V
Rise time t_r	max. 200 ns	max. 1 µs
Fall time t_f	max. 200 ns	max. 1 µs
Short circuit proof outputs:[1)]	yes[2)]	yes
Reverse connection protection at UB:	no; 10 ... 30 V: yes	yes
Conforms to CE requirements acc. to EN 50082-2, EN 50081-2 and EN 55011 Class B		

[1)]When supply voltage correctly applied
[2)]Only one channel at a time: (when U_B = 5 V, short-circuit to channel, 0 V, or +U_B is permitted.)
(when U_B = 10 ... 30 V short-circuit to channel or 0 V is permitted.)

Terminal assignment

Signal:	0V	0V Sensor2)	+U_B	+U_B Sensor2)	A	$\overline{A}$	B	$\overline{B}$	0	$\overline{0}$	Shield
12 pin plug, Pin:	10	11	12	2	5	6	8	1	3	4	PH[1)]
Cable colour:	WH 0,5 mm^2	WH or GY PK	BN 0,5 mm^2	BN or RD BU	GN	YE	GY	PK	BU	RD	

[1)]PH = Shield is attached to connector housing
[2)]The sensor cables are connected to the supply voltage internally if long feeder cables are involved they can be used to adjust or controll the voltage at the rotary position sensor

- If the sensor cables are not in use, they have to be insulated or 0 V_{Sensor} has to be connected to 0 V and $U_{BSensor}$ has to be connected to U_B
- Using RS 422 outputs and long cable distances, a wave impedance has to be applied at each cable end.

Insulate unused outputs before initial startup.

Incremental rotary position sensor shaft version
High resolution Type 5805

Dimensions:

Clamping flange ø 58

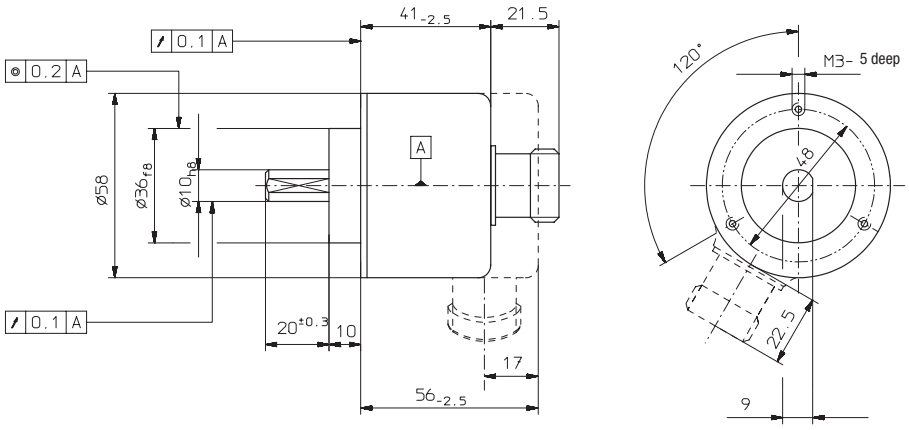

Synchronous flange
ø 58

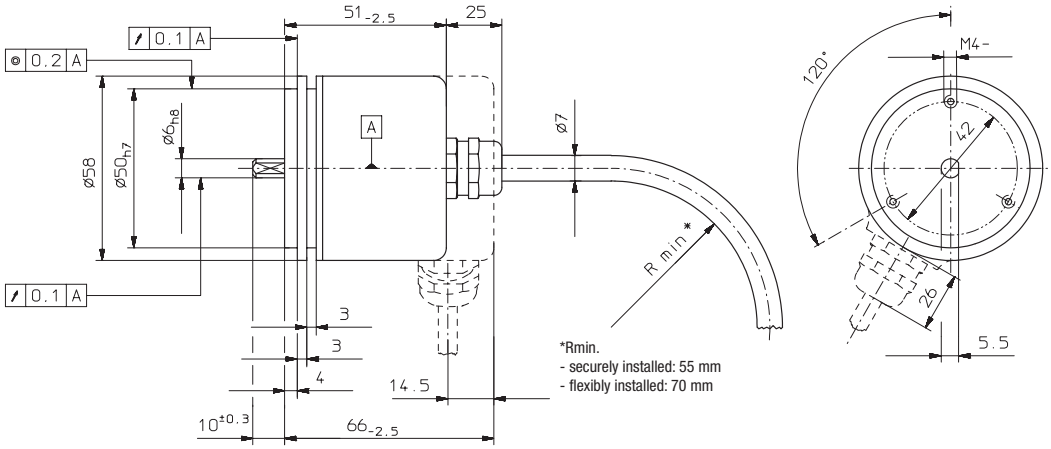

Mounting advice:
Do not connect rotary position sensor and drive rigidly to one another at shafts and flanges!
Always use couplings to prevent shaft overload (see accessories chapter).

Top view of mating side,
male contact base: 12 pin plug

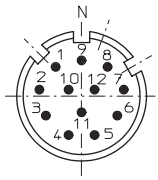

Order code:

T8.5805.XXXX.XXXXX

Range

Flange
- 1 = Clamping flange ø 58
- 2 = Synchronous flange ø 58

Shaft
- 1 = ø 6 mm x 10 mm
- 2 = ø 10 mm x 20 mm

Type of connection and supply voltage
- 4 = RS 422 (with inverted signal) 5 V supply voltage
- 5 = RS 422 (with inverted signal) 10 ... 30 V supply voltage
- 6 = Push-pull (with inverted signal) 10 ... 30 V supply voltage
- 7 = Push-pull (without inverted signal) 10 ... 30 V Supply voltage

Pulse rate
(e.g. 18000 pulses=> 18000)

Type of connection
- 1 = Cable axial (1 m PUR-Cable)
- 2 = Cable radial (1 m PUR-Cable)
- 3 = axial 12 pin plug without mating
- 5 = radial 12 pin plug without mating

Accessories:

Corresponding mating connector of connection type 3 or 5: Art.-no. T8.0000.5012.0000

Further accessories see accessories chapter

Incremental rotary position sensor shaft version
Low-Cost Type 5810

- Economical up to 512 ppr
- Ø58 mm housing
- Short-circuit proof outputs
- High mechanical protection
- Push-pull output (10 ... 30 V supply voltage)

Mechanical characteristics:

Speed:	max. 6000 min^{-1}
Rotor moment of inertia:	appr. 0,6 x 10^{-6} kgm^2
Starting torque:	< 0.01 Nm
Radial load capacity of shaft:	40 N
Axial load capacity of shaft::	20 N
Weight:	appr. 0.4 kg
Protection acc. to EN 60 529:	IP64
Working temperature:	0° C ... +65 °C
Operating temperature:	-10° C ... +75 °C
Shaft:	stainless steel
Shock resistance acc. to DIN-IEC 68-2-27	1000 m/s^2, 6 ms
Vibration resistance acc. to DIN-IEC 68-2-6:	100 m/s^2, 10...2000 Hz

Pulse rates available at short notice:
10, 20, 25, 30, 36, 50, 60, 64, 96, 100, 125, 200, 250, 300, 360, 400, 500, 512

Other pulse rates on request

Electrical characteristics:

Output circuit:	Push-pull
Supply voltage:	10 ... 30 VDC
Power consumption (no load) without inverted signal:	max. 80 mA
Permissible load/channel:	max. ±30 mA
Pulse frequency:	max. 20 kHz
Signal level high:	min. U_B – 2.5 V
Signal level low:	max. 1.5 V
Rise time t_r	max. 1 µs
Fall time t_f	max. 1 µs
Short circuit proof outputs:[1)]	yes
Reverse connection protection at UB:	yes
Conforms to CE requirements acc. to EN 50082-2, EN 50081-2 and EN 55011 Class B	

1)When supply voltage correctly applied

Anschlussbelegung:

Signal:	0 V	$+U_B$	A	B	0 or. $\overline{0}$	Shield
5 pin plug, Pin:	1	2	3	4	5	PH[1)]
Cable colour:	WH	BN	GN	YE	GY	

1)PH = Shield is attached to connector housing

Insulate unused outputs before initial startup.

Top view of mating side, male contact base::

5 pin plug

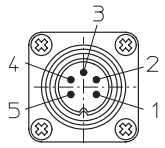

Incremental rotary position sensor shaft version
Low-Cost Type 5810

Dimensions:
Clamping flange ø 58

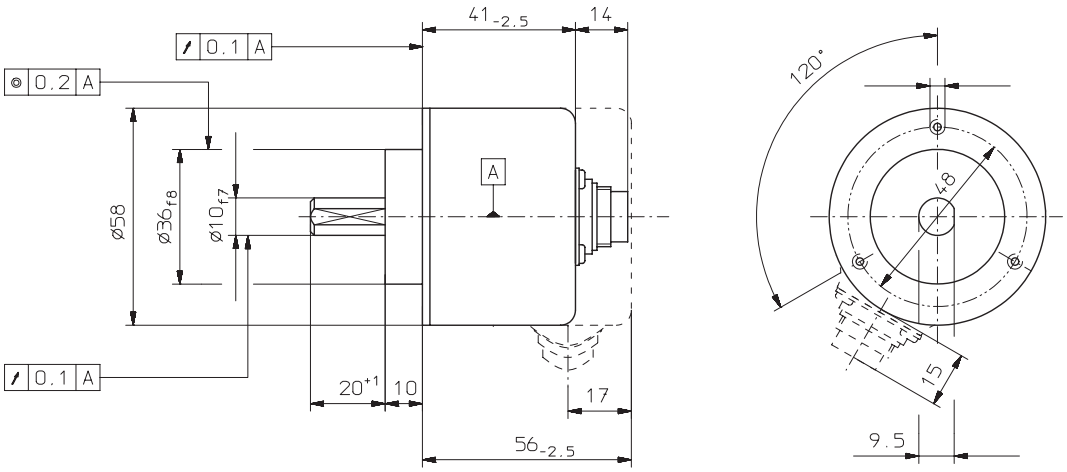

Synchronous flange
ø 58

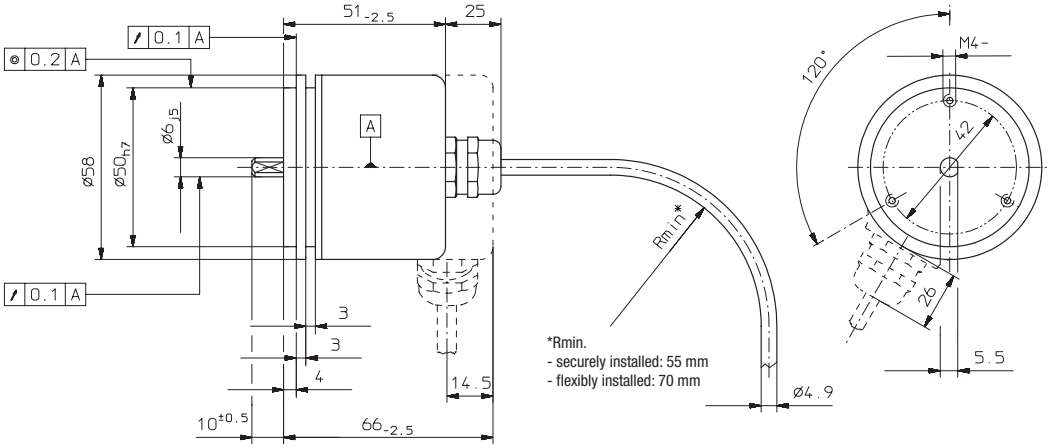

Mounting advice:
Do not connect rotary position sensor and drive rigidly to one another at shafts and flanges! Always use couplings to prevent shaft overload (see accessories chapter).

Order code: **T8.5810.XXXX.XXXX**

Range

Flange
- 1 = Clamping flange ø 58
- 2 = Synchronous flange ø 58

Shaft
- 1 = ø 6 mm x 10 mm
- 2 = ø 10 mm x 20 mm

Output circuit
- 1 = Push-pull, Channel A
- 3 = Push-pull, Channel A and B
- 4 = Push-pull, Channels A and B and 0

Pulse rate
(e.g. 250 pulses=> 0250)

Type of connection
- 1 = Cable axial (1 m PVC-Cable)
- 2 = Cable radial (1 m PVC-Cable)
- 3 = axial 5 pin plug without mating connector
- 5 = radial 5 pin plug without mating connector

Accessories:
Corresponding mating connector of connection type 3 or 5: Art.-no. T8.0000.5022.0000
Further accessories see accessories chapter

Incremental rotary position sensor hollow shaft version
Universal Type 5820

- Only 42 mm clearance needed
- Very easy mounting. The rotary position sensor is mounted directly on the drive shaft without couplings. This saves up to 30 % cost and 60 % clearance compared to shaft versions.
- Many variations
- Temperature and ageing compensation
- Short-circuit proof outputs
- Reverse connection protection for voltage supply
- RS 422 or push-pull output
- Resolution up to 5000 ppr
- Protection up to IP66

Mechanical characteristics:

Speed without sealing:	max. 12000 min^{-1}
Speed with sealing[1]:	max. 6000 min^{-1}
Rotor moment of inertia:	appr. 6 x 10^{-6} kgm^2
Starting torque without sealing:	< 0.01 Nm
Starting torque with sealing:	< 0.05 Nm
Weight:	appr. 0.4 kg
Protection acc. to EN 60 529 without sealing:	IP40
Protection acc. to EN 60 529 sealing:	IP66
Working temperature without sealing:	-20° C up to +85 °C[2][3]
Working temperature with sealing:	-20° C up to +80 °C[2][3]
Operating temperature without sealing:	-20° C up to +90 °C[2][4]
Operating temperature with sealing:	-20° C up to +85 °C[2][4]
Shaft:	stainless steel
Shock resistance acc. to DIN-IEC 68-2-27	2000 m/s^2, 6 ms
Vibration resistance acc. to DIN-IEC 68-2-6:	100 m/s^2, 10...2000 Hz

[1] for continuous operation max. 1500 min^{-1}
[2] non-condensing
[3] 70 °C with Cable
[4] 80 °C with Cable

Pulse rates available at short notice:
10, 20, 25, 30, 50, 60, 100, 120, 125, 127, 150, 180, 200, 216, 240, 250, 254, 256, 300, 314, 360, 375, 400, 500, 512, 600, 625, 720, 745, 750, 762, 800, 900, 927, 1000, 1024, 1250, 1270, 1400, 1500, 1800, 2000, 2048, 2250, 2400, 2500, 3000, 3600, 4000, 4096, 5000

Other pulse rates on request

Electrical characteristics:

Output circuit:	RS 422 (TTL-compatible)	RS 422 (TTL-compatible)	Push-pull	Push-pull
Supply voltage:	5 V (±5%) or 10 ... 30 VDC	5 ... 30 VDC	10 ... 30 VDC	5 ... 30 VDC
Power consumption (no load) without inverted signal:	not available	not available	typ. 55 mA / max. 125 mA	typ. 55 mA / max. 125 mA
Power consumption (no load) with inverted signals:	typ. 70 mA / max. 100 mA	typ. 70 mA / max. 100 mA	typ. 80 mA/ max.150 mA	typ. 80 mA/ max.150 mA
Permissible load/channel:	max. ±20 mA	max. ±20 mA	max. ±30 mA	max. ±30 mA
Pulse frequency:	max. 300 kHz	max. 300 kHz	max. 300 kHz	max. 300 kHz
Signal level high:	min. 2.5 V	min. 2.5 V	min. U_B–3 V	min. U_B–1.5 V
Signal level low:	max. 0.5 V	max. 0.5 V	max. 2.5 V	max. 1.5 V
Rise time t_r	max. 200 ns	max. 200 ns	max. 1 µs	max. 1 µs
Fall time t_f	max. 200 ns	max. 200 ns	max. 1 µs	max. 1 µs
Short circuit proof outputs:[1]:	yes[2]	yes[2]	yes	yes
Reverse connection protection at U_B:	5 V: no 10 ... 30 V: yes	yes	yes	no
Conforms to CE requirements acc. to EN 50082-2, EN 50081-2 and EN 55011 Class B				

[1] When supply voltage correctly applied
[2] Only one channel at a time: When U_B=5 V, short-circuit to channel, 0 V, or +U_B is permitted.
When U_B=10 ... 30 V short-circuit to channel or 0 V is permitted

Incremental rotary position sensor hollow shaft version
Universal Type 5820

Terminal assignment

Signal:	0 V	0 V	$+U_B$	$+U_B$	A	$\overline{A}$	B	$\overline{B}$	0	$\overline{0}$	⏚
		Sens[2]		Sens[2]							
12 pin plug, Pin:	10	11	12	2	5	6	8	1	3	4	PH[1]
Cable colour.:	WH	GY	BN	BU	GN	YE	GY	PK	BU	RD	
		PK		RD							

[1] PH = Shield is attached to connector housing

[2] The sensor cables are connected to the supply voltage internally if long feeder cables are involved they can be used to adjust or controll the voltage at the rotary position sensor

- If the sensor cables are not in use, they have to be insulated or $0\,V_{Sensor}$ has to be connected to 0 V and $U_{BSensor}$ has to be connected to U_B
- Using RS 422 outputs and long cable distances, a wave impedance has to be applied at each cable end.

Insulate unused outputs before initial startup.

Dimensions:

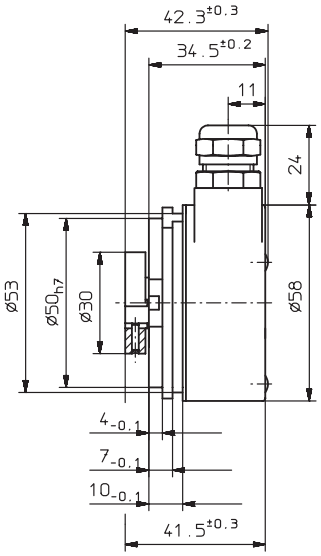

Flange Type 1

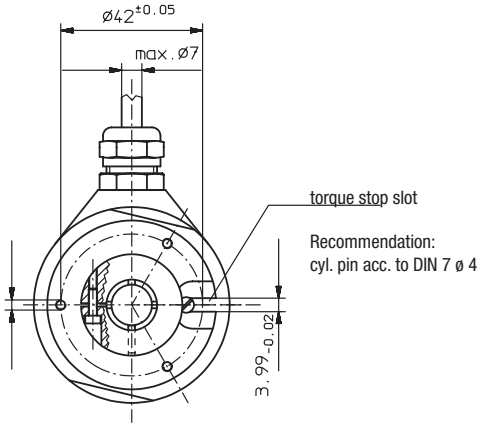

Flange Type 3 with stator coupling

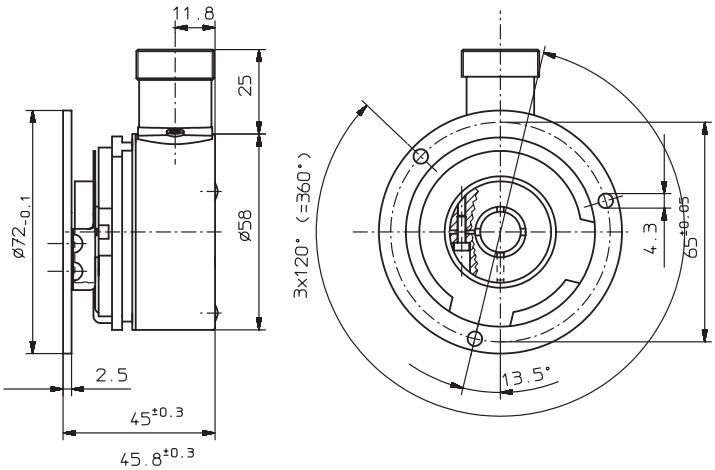

Cyl. pin acc. to DIN 7 ø 4

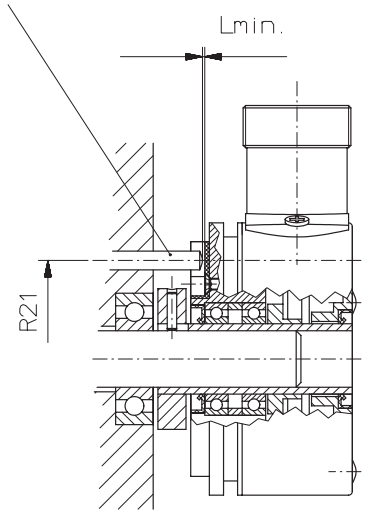

Mounting advice:

1) Do not connect rotary position sensor and drive rigidly to one another at shafts and flanges!

2) To mount a hollow shaft rotary position sensor, we recommend to use a torque stop pin that fits into the torque stop slot or a stator coupling.

3) When mounting the rotary position sensor ensure that Lmin. is gr

Incremental rotary position sensor hollow shaft version
Universal Type 5820

Max. permissible drive shaft impact:
(measuring error ≤ ±0.5 bit)

	Mounting with stator coupling		Mounting with torque stop pin
Pulses:	Permissible axial impact	Permissible radial impact	Permissible radial impact
up to 1000:	±0.4 mm	±0.09 mm	±0.075 mm
up to 2500:	±0.16 mm	±0.036 mm	±0.028 mm
up to 5000:	±0.08 mm	±0.018 mm	±0.014 mm

Top view of mating side, male contact base:
12 pin plug

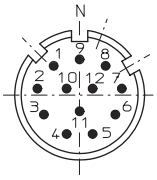

Order code: **T8.5820.XXXX.XXXX**

Range

Flange
- 1 = Flange for through shaft
- 2 = Flange for blind hole shaft*
- 3 = Flange for through shaft and stator coupling
- 4 = Flange for blind hole shaft* and stator coupling

*length of drive shaft ≤ 30 mm

Shaft
- 1 = ø 6 mm without sealing
- 2 = ø 6 mm with sealing
- 3 = ø 8 mm without sealing
- 4 = ø 8 mm with sealing
- 5 = ø 10 mm without sealing
- 6 = ø 10 mm with sealing
- 7 = ø 12 mm without sealing
- 8 = ø 12 mm with sealing
- N* = ø 14 mm with sealing
- P* = ø 15 mm with sealing

*not for blind hole shaft

Pulse rate
(e.g. 250 pulses=> 0250)

Type of connection
- 1 = Cable radial (1 m PVC-cable)
- 2 = radial 12pin plug without mating connector

Type of connection and supply voltage
- 1 = RS 422 (with inverted signal) 5 V supply voltage
- 2 = Push-pull (without inverted signal) 10 ... 30V supply voltage
- 3 = Push-pull (with inverted signal) 10 ... 30V supply voltage
- 4 = RS 422 (with inverted signal) 10 ... 30 V supply voltage
- 5 = Push-pull (without inverted signal) 5 ... 30 V supply voltage
- 6 = Push-pull (with inverted signal) 5 ... 30 V supply voltage
- 7 = RS 422 (with inverted signal) 5 ... 30 V supply voltage

Accessories:

Mounting aids, e.g. mounting kit see accessories chapter

Corresponding mating connector to connection typ 2
Art.-no. T8.0000.5012.0000

Further accessories see accessories chapter

If there is strong axial play, we recommend the use of a extended torque stop support.

Incremental rotary position sensor hollow shaft version
Preferred Type 5822

- Only 42 mm clearance needed
- Very easy mounting. The rotary position sensor is mounted directly on the drive shaft without couplings. This saves up to 30 % cost and 60 % clearance compared to shaft versions.
- Prefered model features; limited variations at economic pricing
- Temperature and ageing compensation
- Short-circuit proof outputs
- Resolution up to 5000 ppr
- Protection up to IP66

Mechanical characteristics:

Speed[1]:	max. 6000 min^{-1}
Rotor moment of inertia:	appr. 6 x 10^{-6} kgm^2
Starting torque:	< 0.05 Nm
Weight:	appr. 0.4 kg
Protection acc. to EN 60 529:	IP66
Working temperature:[2]	-20° C ... +70 °C
Operating temperature:[2]	-20° C ... +70 °C
Shaft:	stainless steel
Shock resistance acc. to DIN-IEC 68-2-27	2000 m/s^2, 6 ms
Vibration resistance acc. to DIN-IEC 68-2-6:	100 m/s^2, 10 ... 2000 Hz

[1] for continuous operation max. 1500 min^{-1}
[2] non-condensing

Pulse rates available at short notice:
10, 20, 25, 30, 50, 60, 100, 120, 125, 127, 150, 180, 200, 216, 240, 250, 254, 256, 300, 314, 360, 375, 400, 500, 512, 600, 625, 720, 745, 750, 762, 800, 900, 927, 1000, 1024, 1250, 1270, 1400, 1500, 1800, 2000, 2048, 2250, 2400, 2500, 3000, 3600, 4000, 4096, 5000

Other pulse rates on request

Electrical characteristics:

Output circuit:	RS 422 (TTL-compatible)	Push-pull	Push-pull
Supply voltage:	5 V (±5%)	10 ... 30 VDC	5 ... 30 VDC
Power consumption (no load) without inverted signal:	not available	typ. 55 mA / max. 125 mA	typ. 55 mA / max. 125 mA
Power consumption (no load) with inverted signals:	typ. 70 mA / max. 100 mA	—	—
Permissible load/channel:	max. ±20 mA	max. ±30 mA	max. ±30 mA
Pulse frequency:	max. 300 kHz	max. 300 kHz	max. 300 kHz
Signal level high:	min. 2.5 V	min. U_B–3 V	min. U_B–1.5 V
Signal level low:	max. 0.5 V	max. 2.5 V	max. 1.5 V
Rise time t_r	max. 200 ns	max. 1 µs	max. 1 µs
Fall time t_f	max. 200 ns	max. 1 µs	max. 1 µs
Short circuit proof outputs:[1]:	yes[2]	yes	yes
Reverse connection protection at UB:	no	yes	no
Conforms to CE requirements acc. to EN 50082-2, EN 50081-2 and EN 55011 Class B			

[1] When supply voltage correctly applied
[2] Only one channel at a time: When U_B = 5 V, short-circuit to channel, 0 V, or +U_B is permitted.

Incremental rotary position sensor hollow shaft version
Preferred Type 5822

Terminal assignment

Signal:	0 V	0 V Sens[2)]	$+U_B$	$+U_B$ Sens[2)]	A	$\overline{A}$	B	$\overline{B}$	0	$\overline{0}$	⏚
Cable colour:	WH	GY PK	BN	BU RD	GN	YE	GY	PK	BU	RD	

[1)] PH = Shield is attached to connector housing

[2)] The sensor cables are connected to the supply voltage internally and if long feeder cables are involved can be used for adjusting or controlling the voltage at the rotary position sensor

If the sensor cables are not in use, they have to be insulated or 0 VSensor has to be connected to 0 V and $U_{BSensor}$ has to be connected to U_B.

Using RS 422 outputs and long cable distances, a wave impedance has to be applied at each cable end.

Insulate unused outputs before initial startup.

Dimensions:

Flange Type 1

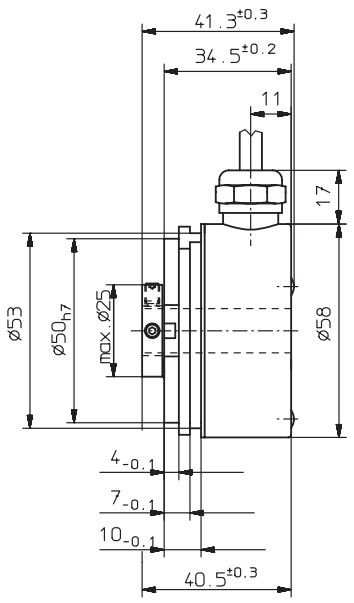

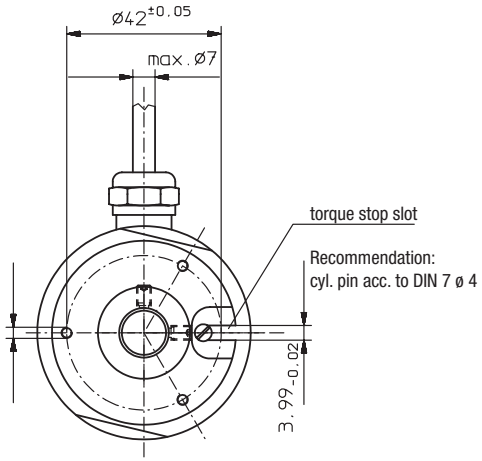

Flange Type 3 with stator coupling

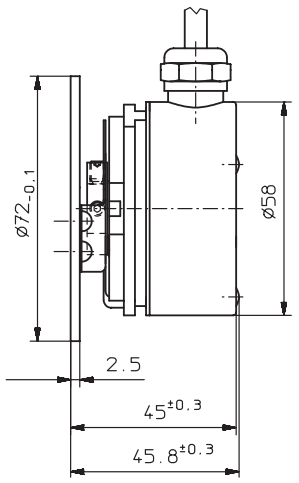

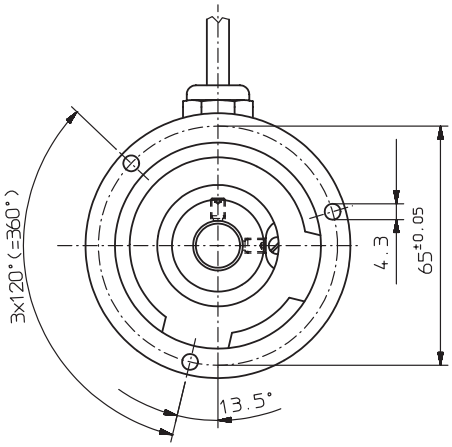

Cyl. pin acc. to DIN 7 ø 4

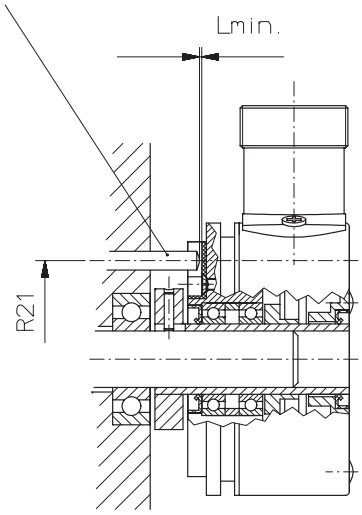

Mounting advice:

1) Do not connect rotary position sensor and drive rigidly to one another at shafts and flanges!

2) To mount a hollow shaft rotary position sensor, we recommend to use a torque stop pin that fits into the torque stop slot or a stator coupling.

3) When mounting the rotary position sensor ensure that Lmin. is larger than the axial play of the drive.

Incremental rotary position sensor hollow shaft version
Preferred Type 5822

Max. permissible drive shaft impact:
(measuring error ≤ ±0.5 bit)

	Mounting with stator coupling		Mounting with torque support
Pulses:	Permissible axial impact	Permissible radial impact	Permissible radial impact
up to 1000:	±0.4 mm	±0.09 mm	±0.075 mm
up to 2500:	±0.16	±0.036 mm	±0.028 mm
up to 5000:	±0.08 mm	±0.018 mm	±0.014 mm

Order code:

T8.5822.XXXX.XXXX

Range

Flange
- 1 = Flange for through shaft
- 2 = Flange for blind hole shaft*
- 3 = Flange for through shaft and stator coupling
- 4 = Flange for blind hole shaft* and stator coupling

*length of drive shaft ≤ 30 mm

Shaft
- 6 = ø 10 mm
- 8 = ø 12 mm

Pulse rate
(e.g. 250 pulses=> 0250)

Type of connection
- 1 = Cable radial (1 m PVC-cable)

Type of connection and supply voltage
- 1 = RS 422 (with inverted signal) 5 V supply voltage
- 2 = Push-pull (without inverted signal) 10 ... 30V supply voltage
- 5 = Push-pull (without inverted signal) 5 ... 30 V supply voltage

Types in stock:

T8.5822.1611.0512
T8.5822.1611.1024
T8.5822.1651.1000
T8.5822.1651.2500
T8.5822.1811.2048
T8.5822.1811.5000
T8.5822.1851.0500
T8.5822.1851.3600

Accessories:

Mounting aids, e.g. mounting kit see accessories chapter

Further accessories see accessories chapter

For larger axial play, we recommend the use of the extended torque support.

Incremental rotary position sensor hollow shaft version
High temperature Typ 5823

- High temperature model up to 110 °C. Application at high temperatures, e.g. in drive technology
- Only 42 mm clearance needed
- Very easy mounting. The rotary position sensor is mounted directly on the drive shaft without couplings. This saves up to 30 % cost and 60 % clearance compared to shaft versions
- Many variations
- Temperature and ageing compensation
- Short-circuit proof outputs
- Reverse connection protection for voltage supply
- Resolution up to 5000 ppr
- IP66

Mechanical characteristics:

Speed without sealing:	max. 12000 min^{-1}
Speed with sealing[1]:	max. 6000 min^{-1}
Rotor moment of inertia:	appr. 6 x 10^{-6} kgm^2
Starting torque without sealing:	< 0.01 Nm
Starting torque with sealing:	< 0.05 Nm
Weight:	appr. 0.4 kg
Protection acc. to EN 60 529 without sealing:	IP40
Protection acc. to EN 60 529 with sealing:	IP66
Working temperature without sealing:	-20 °C ... +105 °C[2)3)]
Working temperature with sealing:	-20 °C ... +90 °C[2)3)]
Operating temperature without sealing:	-20 °C ... +110 °C[2)3)]
Operating temperature with sealing:	-20 °C ... +95 °C[2)3)]
Shaft:	stainless steel
Shock resistance acc. to DIN-IEC 68-2-27	2000 m/s^2, 6 ms
Vibration resistance acc. to DIN-IEC 68-2-6:	100 m/s^2, 10...2000Hz

[1)] for continuous operation max. 1500 min^{-1}
[2)] non-condensing
[3)] depending on speed

Pulse rates available at short notice:
10, 20, 25, 30, 50, 60, 100, 120, 125, 127, 150, 180, 200, 216, 240, 250, 254, 256, 300, 314, 360, 375, 400, 500, 512, 600, 625, 720, 745, 750, 762, 800, 900, 927, 1000, 1024, 1250, 1270, 1400, 1500, 1800, 2000, 2048, 2250, 2400, 2500, 3000, 3600, 4000, 4096, 5000

Other pulse rates on request

Electrical characteristics:

Output circuit:	RS 422 (TTL-compatible)	Push-pull
Supply voltage:	5 V (±5 %) or 10 ... 30 VDC	10 ... 30 VDC
Power consumption (no load) without inverted signal:	–	typ. 55 mA / max. 125 mA
Power consumption (no load) with inverted signals:	typ. 70 mA / max. 100 mA	typ. 80 mA/ max.150 mA
Permissible load/channel:	max. ±20 mA	max. ±30 mA
Pulse frequency:	max. 300 kHz	max. 300 kHz
Signal level high:	min. 2.5 V	min. U_B–3 V
Signal level low:	max. 0.5 V	max. 2.5 V
Rise time t_r	max. 200 ns	max. 1 µs
Fall time t_f	max. 200 ns	max. 1 µs
Short circuit proof outputs:[1)]	yes[2)]	yes
Reverse connection protection at UB:	5 V: no; 10 ... 30 V: yes	yes
Conforms to CE requirements acc. to EN 50082-2, EN 50081-2 and EN 55011 Class B		

[1)] When supply voltage correctly applied
[2)] Only one channel at a time: (when U_B = 5 V, short-circuit to channel, 0 V, or +U_B is permitted.)
(when U_B=10 ... 30 V short-circuit to channel or 0 V is permitted.)

Incremental rotary position sensor hollow shaft version
High temperature Typ 5823

Terminal assignment

Signal:	0 V	0 V	$+U_B$	$+U_B$	A	$\overline{A}$	B	$\overline{B}$	0	$\overline{0}$	Shield
		Sensor[2)]		Sensor[2)]							
12 pin plug; Pin:	10	11	12	2	5	6	8	1	3	4	PH[1)]
Cable colour:	WH 0,5 mm²	WH or GY PK	BN 0,5 mm²	BN or. RD BU	GN	YE	GY	PK	BU	RD	

1) PH = Shield is attached to connector housing

2) The sensor cables are connected to the supply voltage internally and if long feeder cables are involved can be used for adjusting or controlling the voltage at the rotary position sensor

- If the sensor cables are not in use, they have to be insulated or $0_{VSensor}$ has to be connected to 0 V and $U_{BSensor}$ has to be connected to U_B

- Using RS 422 outputs and long cable distances, a wave impedance has to be applied at each cable end.

Dimensions

Flange Type 1

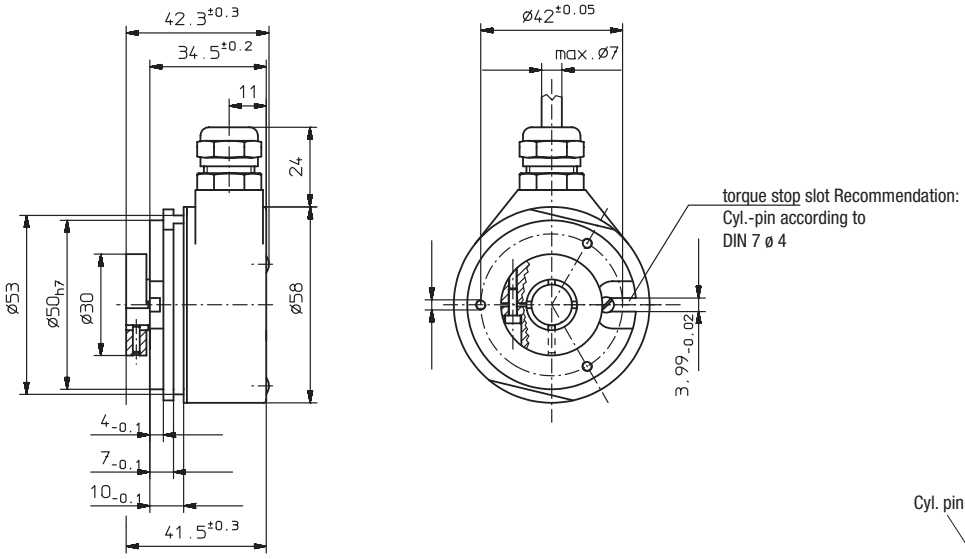

Flange Type 3 with stator coupling

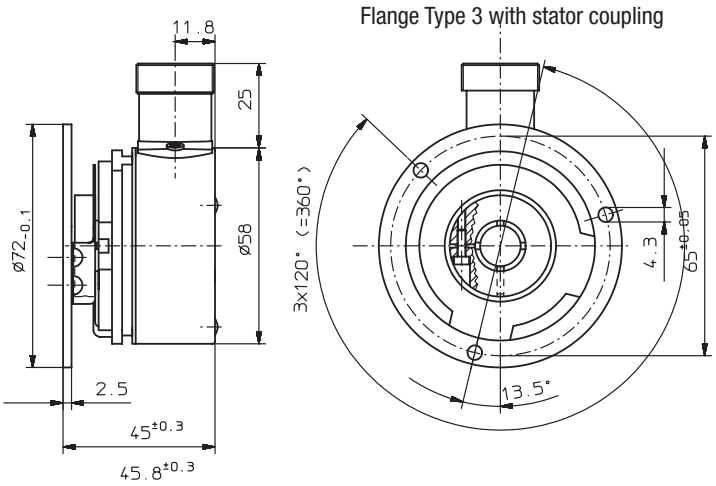

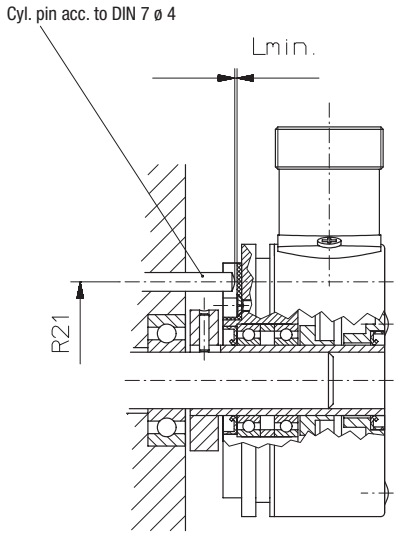

Mounting advice:

1) Do not connect rotary position sensor and drive rigidly to one another at shafts and flanges!

2) To mount a hollow shaft rotary position sensor, we recommend to use a torque stop pin that fits into the torque stop slot or a stator coupling.

3) When mounting the rotary position sensor ensure that Lmin. is larger than the axial play of the drive.

Incremental rotary position sensor hollow shaft version
High temperature Typ 5823

Max. permissible drive shaft impact:
(measuring error ≤ ±0.5 bit)

	Mounting with stator coupling		Mounting with torque support
Pulses impact	permissible axial impact	permissible radial impact	permissible radial
up to 1000	±0.40 mm	±0.09 mm	±0.075 mm
up to 2500	±0.16 mm	±0.036 mm	±0.028 mm
up to 5000	±0.08 mm	±0.018 mm	±0.014 mm

Top view of mating side, male contact base:
12 pin plug

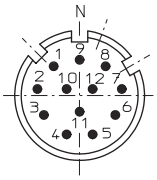

Order code:

T8.5823.XXXX.XXXX

Range

Flange
- 1 = Flange for through shaft
- 2 = Flange for blind hole shaft*
- 3 = Flange for through shaft and stator coupling
- 4 = Flange for blind hole shaft* and stator coupling

*length of drive shaft ≤ 30 mm

Shaft
- 1 = ø 6 mm without sealing
- 2 = ø 6 mm with sealing
- 3 = ø 8 mm without sealing
- 4 = ø 8 mm with sealing
- 5 = ø 10 mm without sealing
- 6 = ø 10 mm with sealing
- 7 = ø 12 mm without sealing
- 8 = ø 12 mm with sealing

Pulse rate
(e.g. 250 pulses=> 0250)

Type of connection
- 1 = Cable radial (1 m TPE-cable)
- 2 = 12 pin plug without mating connector, radial

Output circuit and voltage supply
- 1 = RS 422 (with inverted signal) 5 V supply voltage
- 2 = Push-pull (without inverted signal) 10 ... 30V supply voltage
- 3 = Push-pull (with inverted signal) 10 ... 30V supply voltage
- 4 = RS 422 (with inverted signal) 10 ... 30 V supply voltage

Accessories:

Mounting aids, e.g. mounting kit see accessories chapter

Corresponding mating connector to connection type 2
Art.No T8.0000.5012.0000

Further accessories see accessories chapter

For larger axial play, we recommend the use of the extended torque support.

Incremental rotary position sensor hollow shaft version
Sine wave output Type 5824

- Only 42 mm clearance needed
- Very easy mounting. The rotary position sensor is mounted directly on the drive shaft without couplings. This saves up to 30 % cost and 60 % clearance compared to shaft versions
- Many variations
- Temperature and ageing compensation
- Short-circuit proof outputs
- Reverse connection protection for voltage supply
- Sine wave output 1 Vpp
- Resolution up to 5000 ppr
- IP66

Mechanical characteristics:

Speed without sealing:	max. 12000 min^{-1}
Speed with sealing:[1]:	max. 6000 min^{-1}
Rotor moment of inertia:	appr. 6 x 10^{-6} kgm^2
Starting torque without sealing:	< 0.01 Nm
Starting torque with sealing:	< 0.05 Nm
Weight:	appr. 0.4 kg
Protection acc. to EN 60 529 without sealing:	IP40
Protection acc. to EN 60 529 with sealing:	IP66
Working temperature without sealing:	-20 °C ... +85 °C[2][3]
Working temperature with sealing:	-20 °C ... +80 °C[2][3]
Operating temperature without sealing:	-20 °C ... +90 °C [2][4])
Operating temperature with sealing:	-20 °C ... +85 °C [2][4]
Shaft:	stainless steel
Shock resistance acc. to DIN-IEC 68-2-27	2000 m/s^2, 6 ms
Vibration resistance acc. to DIN-IEC 68-2-6:	100 m/s^2, 10...2000Hz

[1] for continuous operation max. 1500 min^{-1}
[2] non-condensing
[3] 70 °C with Cable
[4] 80 °C with Cable

Electrical characteristics:

Output circuit:	Sine wave U = 1 Vpp	Sine wave U = 1 Vpp
Supply voltage:	5 V (±5%)	10 ... 30 VDC
Current consumption	type. 65 mA /	type. 65 mA /
(no load) with inverted signals:	max. 110 mA	max. 110 mA
-3 dB frequency:	≥ 180 kHz	≥ 180 kHz
Signal level channels A/B:	1 Vpp (±20 %)	1 Vpp (±20 %)
Signal level channel 0:	0.1 ... 1.2 V	0.1 ... 1.2 V
Short circuit proof outputs:[1]	yes	yes
Reverse connection protection at U_B:	no	yes
Conforms to CE requirements acc. to EN 50082-2, EN 50081-2 and EN 55011 Class B		

[1] When supply voltage correctly applied

Pulse rates available at short notice:
bei Spannungsinusversion
500, 512, 600, 625, 720, 745, 750, 762, 800, 900, 927, 1000, 1024, 1250, 1270, 1400, 1500, 1800, 2000, 2048, 2250, 2400, 2500, 3000, 3600, 4000, 4096, 5000

Other pulse rates on request

Incremental rotary position sensor hollow shaft version
Sine wave output Type 5824

Terminal assignment Spannungssinusversion:

Signal:	0 V	0 V Sensor[2)]	$+U_B$	$+U_B$ Sensor[2)]	A	$\overline{A}$	B	$\overline{B}$	0	$\overline{0}$	Shield
12 pin plug; Pin:	10	11	12	2	5	6	8	1	3	4	PH[1)]
Cable colour:	WH 0.5 mm^2	WH or GY PK	BN 0,5 mm^2	BN or RD BU	GN	YE	GY	PK	BU	RD	

1)PH = Shield is attached to connector housing
2)The sensor cables are connected to the supply voltage internally if long feeder cables are involved they can be used to adjust or controll the voltage at the rotary position sensor

- If the sensor cables are not in use, they have to be insulated or $0\,V_{Sensor}$ has to be connected to 0 V and $U_{BSensor}$ has to be connected to U_B

Insulate unused outputs before initial startup.

Dimensions:

Flange Type 1

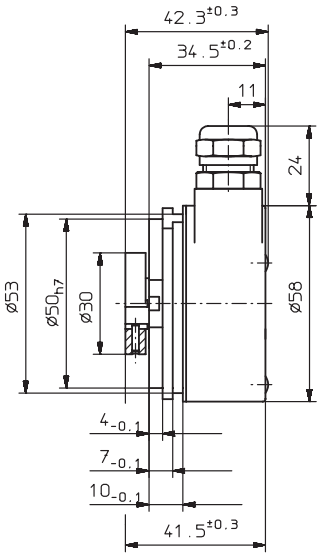

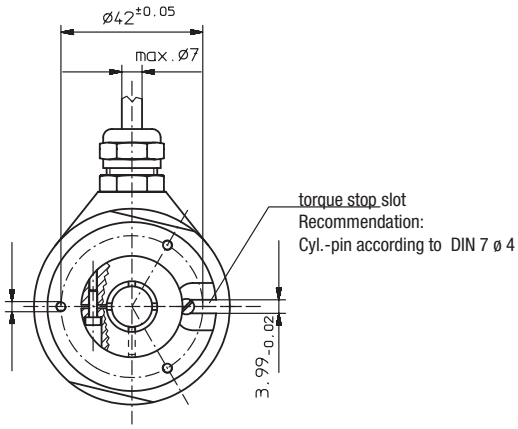

Flange Type 3 with stator coupling

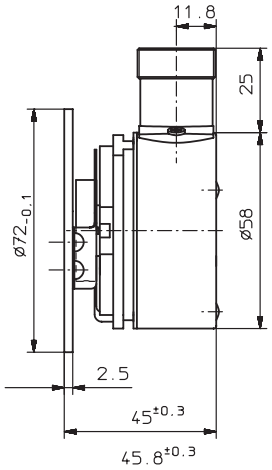

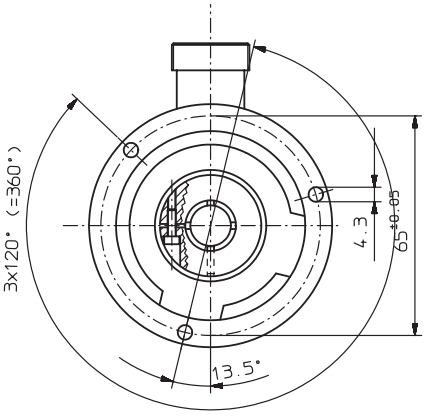

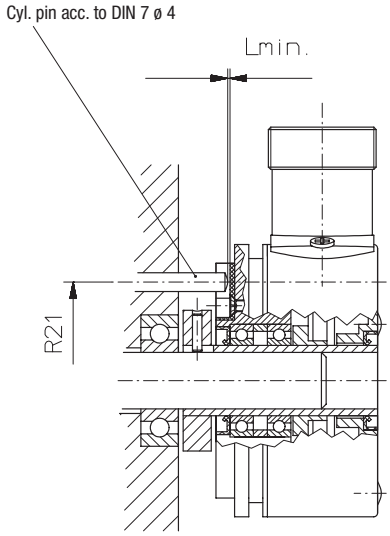

Mounting advice:

1) Do not connect rotary position sensor and drive rigidly to one another at shafts and flanges!

2) To mount a hollow shaft rotary position sensor, we recommend to use a torque stop pin that fits into the torque stop slot or a stator coupling.

3) When mounting the rotary position sensor ensure that Lmin. is larger than the axial play of the drive.

Incremental rotary position sensor hollow shaft version
Sine wave output Type 5824

Max. permissible drive shaft impact:
(measuring error ≤ ±0.5 bit)

	Mounting with stator coupling		Mounting with torque
support			
Pulses	permissible axial impact	permissible radial impact	permissible radial impact
up to 1000	±0.40 mm	±0.09 mm	±0.075 mm
up to 2500	±0.16 mm	±0.036 mm	±0.028 mm
up to 5000	±0.08 mm	±0.018 mm	±0.014 mm

Top view of mating side, male contact base:
12 pin plug

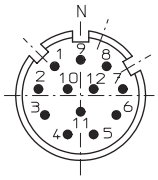

Order code:

T8.5824.XXXX.XXXX

Range

Flange
- 1 = Flange for through shaft
- 2 = Flange for blind hole shaft*
- 3 = Flange for through shaft and stator coupling
- 4 = Flange for blind hole shaft* and stator coupling

*length of drive shaft ≤ 30 mm

Shaft
- 1 = ø 6 mm without sealing
- 2 = ø 6 mm with sealing
- 3 = ø 8 mm without sealing
- 4 = ø 8 mm with sealing
- 5 = ø 10 mm without sealing
- 6 = ø 10 mm with sealing
- 7 = ø 12 mm without sealing
- 8 = ø 12 mm with sealing
- N = ø 14 mm with sealing
- P = ø 15 mm with sealing

Pulse rate
(e.g. 250 pulses=> 0250)

Type of connection
- 1 = Cable radial (1 m PUR-cable)
- 2 = radial 12 pin plug

Output circuit and supply voltage
- 1 = Sinus, 1 Vpp (with inverted signal) 5 V supply voltage
- 2 = Sinus, 1 Vpp (with inverted signal) 10 ... 30 V supply voltage

Accessories:

Mounting aids, e.g. mounting kit see accessories chapter

Corresponding mating connector to connection type 2
Art.No T8.0000.5012.0000

Further accessories see accessories chapter

Incremental rotary position sensor hollow shaft version
High resolution Type 5825

- Only 42 mm clearance needed
- Very easy mounting. The rotary position sensor is mounted directly on the drive shaft without couplings. This saves up to 30 % cost and 60 % clearance compared to shaft versions
- Resolution up to 36000 ppr (internally interpolated)
- Many variations
- Temperature and ageing compensation
- Short-circuit proof outputs
- Reverse connection protection for voltage supply
- RS 422 or push-pull output
- IP66
- Alarm output (optional)

Mechanical characteristics:

Speed without sealing:	max. 12000 min^{-1}
Speed with sealing[1]:	max. 6000 min^{-1}
Rotor moment of inertia:	appr. 6 x 10^{-6} kg m^2
Starting torque without sealing:	< 0.01 Nm
Starting torque with sealing:	< 0.05 Nm
Weight:	appr. 0.4 kg
Protection acc. to EN 60 529 without sealing:	IP40
Protection acc. to EN 60 529 with sealing:	IP66
Working temperature without sealing:	-20 °C ... +85 °C[2)3)]
Working temperature with sealing:	-20 °C ... +80 °C[2)3)]
Operating temperature without sealing:	-20 °C ... +90 °C [2)4)]
Operating temperature with sealing:	-20 °C ... +85 °C [2)4)]
Shaft:	stainless steel
Shock resistance acc. to DIN-IEC 68-2-27	2000 m/s^2, 6 ms
Vibration resistance acc. to DIN-IEC 68-2-6:	100 m/s^2, 10...2000 Hz

[1)] for continuous operation max. 1500 min^{-1}
[2)] non-condensing
[3)] 70 °C with Cable
[4)] 80 °C with Cable

Pulse rates available at short notice:
6000, 7200, 8000, 8192, 9000, 10000, 18000, 25000, 36000

Other pulse rates on request

Electrical characteristics:

Output circuit:	RS 422 (TTL-compatible)	Push-pull
Supply voltage:	5 V (±5 %) or 10 ... 30 VDC	10 ... 30 VDC
Power consumption (no load) without inverted signal:	not available	typ. 90 mA / max. 135 mA
Power consumption (no load) with inverted signals:	typ. 70 mA / max. 100 mA	typ. 115 mA/ max.160 mA
Permissible load/channel:	max. ±20 mA	max. ±30 mA
Pulse frequency:	max. 800 kHz	max. 600 kHz
Signal level high:	min. 2.5 V	min. U_B – 3 V
Signal level low:	max. 0.5 V	max. 2.5 V
Rise time tr	max. 200 ns	max. 1 µs
Fall time tf	max. 200 ns	max. 1 µs
Short circuit proof outputs:[1)]	yes[2)]	yes
Reverse connection protection at U_B:	5 V:no; 10 ... 30 V: yes	yes
Conforms to CE requirements acc. to EN 50082-2, EN 50081-2 and EN 55011 Class B		

[1)] When supply voltage correctly applied
[2)] Only one channel at a time: (when U_B = 5 V, short-circuit to channel, 0 V, or +U_B is permitted.)
(when U_B = 10 ... 30 V short-circuit to channel or 0 V is permitted.)

Incremental rotary position sensor hollow shaft version
High resolution Type 5825

Terminal assignment

Signal:	0 V	0 V Sensor[2)]	$+U_B$	$+U_B$ Sensor[2)]	A	$\overline{A}$	B	$\overline{B}$	0	$\overline{0}$	Shield
12 pin plug; Pin:	10	11	12	2	5	6	8	1	3	4	PH[1)]
Cable colour:	WH 0.5 mm^2	WH bzw. GY PK	BN 0,5 mm^2	BN bzw. RD BU	GN	YE	GY	PK	BU	RD	

[1)] PH = Shield is attached to connector housing

[2)] The sensor cables are connected to the supply voltage internally if long feeder cables are involved they can be used to adjust or controll the voltage at the rotary position sensor

- If the sensor cables are not in use, they have to be insulated or 0 V_{Sensor} has to be connected to 0 V and $U_{BSensor}$ has to be connected to U_B
- Using RS 422 outputs and long cable distances, a wave impedance has to be applied at each cable end.

Insulate unused outputs before initial startup.

Dimensions:

Flange Type 1

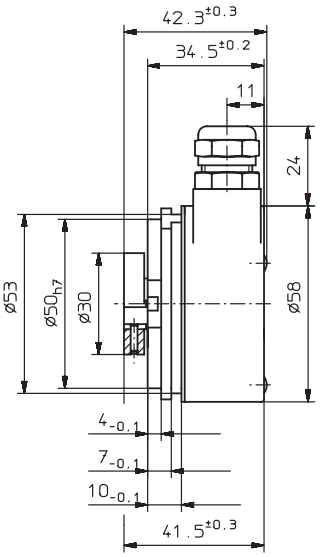

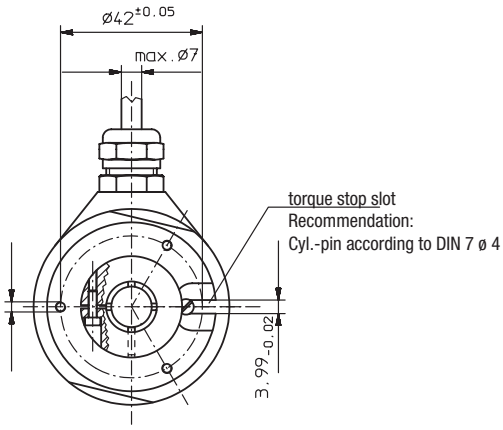

Flange Type 3 with stator coupling

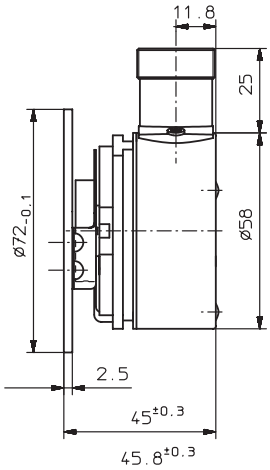

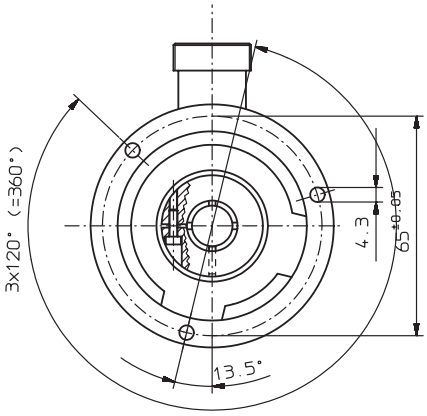

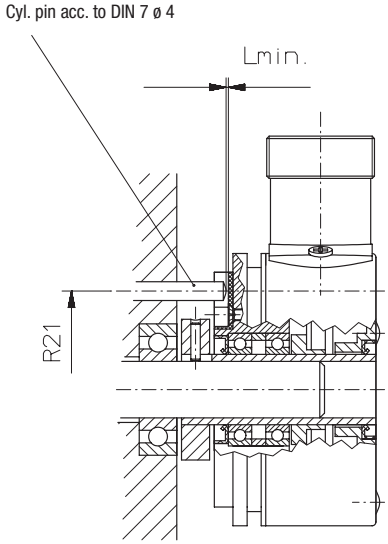

Mounting advice:

1) Do not connect rotary position sensor and drive rigidly to one another at shafts and flanges!

2) To mount a hollow shaft rotary position sensor, we recommend to use a torque stop pin that fits into the torque stop slot or a stator coupling.

3) When mounting the rotary position sensor ensure that Lmin. is larger than the axial play of the drive.

Incremental rotary position sensor hollow shaft version
High resolution Type 5825

Max. permissible drive shaft impact: (measuring error ≤ ±0.5 bit)

	Mounting with stator coupling	
Pulses	permissible axial impact	permissible radial impact
up to 10000	±0.16 mm	±0.001 mm
up to 20000	±0.08 mm	±0.004 mm
up to 30000	±0.01	±0.002

Top view of mating side, male contact base:

12 pin plug

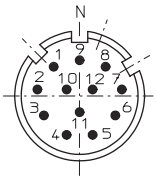

Order code: **T8.5825.XXXX.XXXX**

Range

Flange
- 1 = Flange for through shaft
- 2 = Flange for blind hole shaft*
- 3 = Flange for through shaft and stator coupling
- 4 = Flange for blind hole shaft* and stator coupling

*length of drive shaft ≤ 30 mm

Shaft
- 1 = ø 6 mm without sealing
- 2 = ø 6 mm with sealing
- 3 = ø 8 mm without sealing
- 4 = ø 8 mm with sealing
- 5 = ø 10 mm without sealing
- 6 = ø 10 mm with sealing
- 7 = ø 12 mm without sealing
- 8 = ø 12 mm with sealing
- N = ø 14 mm with sealing
- P = ø 15 mm with sealing

Pulse rate
(e.g. 36000 pulses=> 36000)

Type of connection
- 1 = Cable radial (1 m PVC-cable)
- 2 = radial 12 pin plug without mating connector

Output circuit and voltage display
- 1 = RS 422 (with inverted signal) 5 V supply voltage
- 2 = Push-pull (without inverted signal) 10 ... 30 V supply voltage
- 3 = Push-pull (with inverted signal) 10 ... 30 V supply voltage
- 4 = RS 422 (with inverted signal) 10 ... 30 V supply voltage

Accessories:
Mounting aids, e.g. mounting kit see accessories chapter

Corresponding mating connector to connection type 2
Art.No T8.0000.5012.0000

Further accessories see accessories chapter
We recommend to use the stator coupling.

Incremental rotary position sensor hollow shaft version
NIRO Type 5826

- Only 42 mm clearance needed
- Stainless steel housing
- Very easy mounting. The rotary position sensor is mounted directly on the drive shaft without couplings. This saves up to 30 % cost and 60 % clearance compared to shaft versions.
- Many variations
- Temperature and ageing compensation
- Short-circuit proof outputs
- Reverse connection protection for voltage supply
- RS 422 or push-pull output
- Resolution up to 5000 ppr
- Protection up to IP66

Mechanical characteristics:

Speed without sealing:	max. 12000 min^{-1}
Speed with sealing[1]:	max. 6000 min^{-1}
Rotor moment of inertia:	appr. 6 x 10^{-6} k gm^2
Starting torque without sealing:	< 0.01 Nm
Starting torque with sealing:	< 0.05 Nm
Weight:	appr. 0.4 kg
Protection acc. to EN 60 529 without sealing:	IP40
Protection acc. to EN 60 529 with sealing:	IP66
Working temperature without sealing:	-20° C ...+85 °C[2][3]
Working temperature with sealing:	-20° C ... +80 °C[2][3]
Operating temperature without sealing:	-20° C ... +90 °C[2][4]
Operating temperature with sealing:	-20° C ... +85 °C[2][4]
Shaft:	stainless steel
Shock resistance acc. to DIN-IEC 68-2-27	2000 m/s^2, 6 ms
Vibration resistance acc. to DIN-IEC 68-2-6:	100 m/s^2, 10 ... 2000 Hz

[1] for continuous operation max. 1500 min^{-1}
[2] non-condensing
[3] 70 °C with Cable
[4] 80 °C with Cable

Pulse rates available at short notice:
10, 20, 25, 30, 50, 60, 100, 120, 125, 127, 150, 180, 200, 216, 240, 250, 254, 256, 300, 314, 360, 375, 400, 500, 512, 600, 625, 720, 745, 750, 762, 800, 900, 927, 1000, 1024, 1250, 1270, 1400, 1500, 1800, 2000, 2048, 2250, 2400, 2500, 3000, 3600, 4000, 4096, 5000

Other pulse rates on request

Electrical characteristics:

Output circuit:	RS 422 (TTL-compatible)	RS 422 (TTL-compatible)	Push-pull	Push-pull
Supply voltage:	5 V (±5 %) or 10 ... 30 VDC	5 ... 30 VDC	10 ... 30 VDC	5 ... 30 VDC
Power consumption (no load) without inverted signal:	not available	not available	typ. 55 mA / max. 125 mA	typ. 55 mA / max. 125 mA
Power consumption (no load) with inverted signals:	typ. 70 mA / max. 100 mA	typ. 70 mA / max. 100 mA	typ. 80 mA/ max.150 mA	typ. 80 mA/ max.150 mA
Permissible load/channel:	max. ±20 mA	max. ±20 mA	max. ±30 mA	max. ±30 mA
Pulse frequency:	max. 300 kHz	max. 300 kHz	max. 300 kHz	max. 300 kHz
Signal level high:	min. 2.5 V	min. 2.5 V	min. U_B–3 V	min. U_B–1.5 V
Signal level low:	max. 0.5 V	max. 0.5 V	max. 2.5 V	max. 1.5 V
Rise time t_r	max. 200 ns	max. 200 ns	max. 1 µs	max. 1 µs
Fall time t_f	max. 200 ns	max. 200 ns	max. 1 µs	max. 1 µs
Short circuit proof outputs:[1]:	yes[2]	yes[2]	yes	yes
Reverse connection protection at U_B:	5 V: no; 10 ... 30 V: yes	yes yes	yes yes	no no
Conforms to CE requirements acc. to EN 50082-2, EN 50081-2 and EN 55011 Class B				

[1] When supply voltage correctly applied
[2] Only one channel at a time: When U_B = 5 V, short-circuit to channel, 0 V, or +U_B is permitted.
When U_B = 10 ... 30 V short-circuit to channel or 0 V is permitted

Incremental rotary position sensor hollow shaft version
NIRO Type 5826

Terminal assignment

Signal:	0 V	0 V Sens[2)]	$+U_B$	$+U_B$ Sens[2)]	A	$\overline{A}$	B	$\overline{B}$	0	$\overline{0}$	⏚
Cable colour:	WH	GY PK	BN	BU RD	GN	YE	GY	PK	BU	RD	

[1)] PH = Shield is attached to connector housing

[2)] The sensor cables are connected to the supply voltage internally if long feeder cables are involved they can be used to adjust or controll the voltage at the rotary position sensor

If the sensor cables are not in use, they have to be insulated or 0 V_{Sensor} has to be connected to 0 V and $U_{BSensor}$ has to be connected to U_B.

Using RS 422 outputs and long cable distances, a wave impedance has to be applied at each cable end.

Insulate unused outputs before initial startup.

Dimensions:

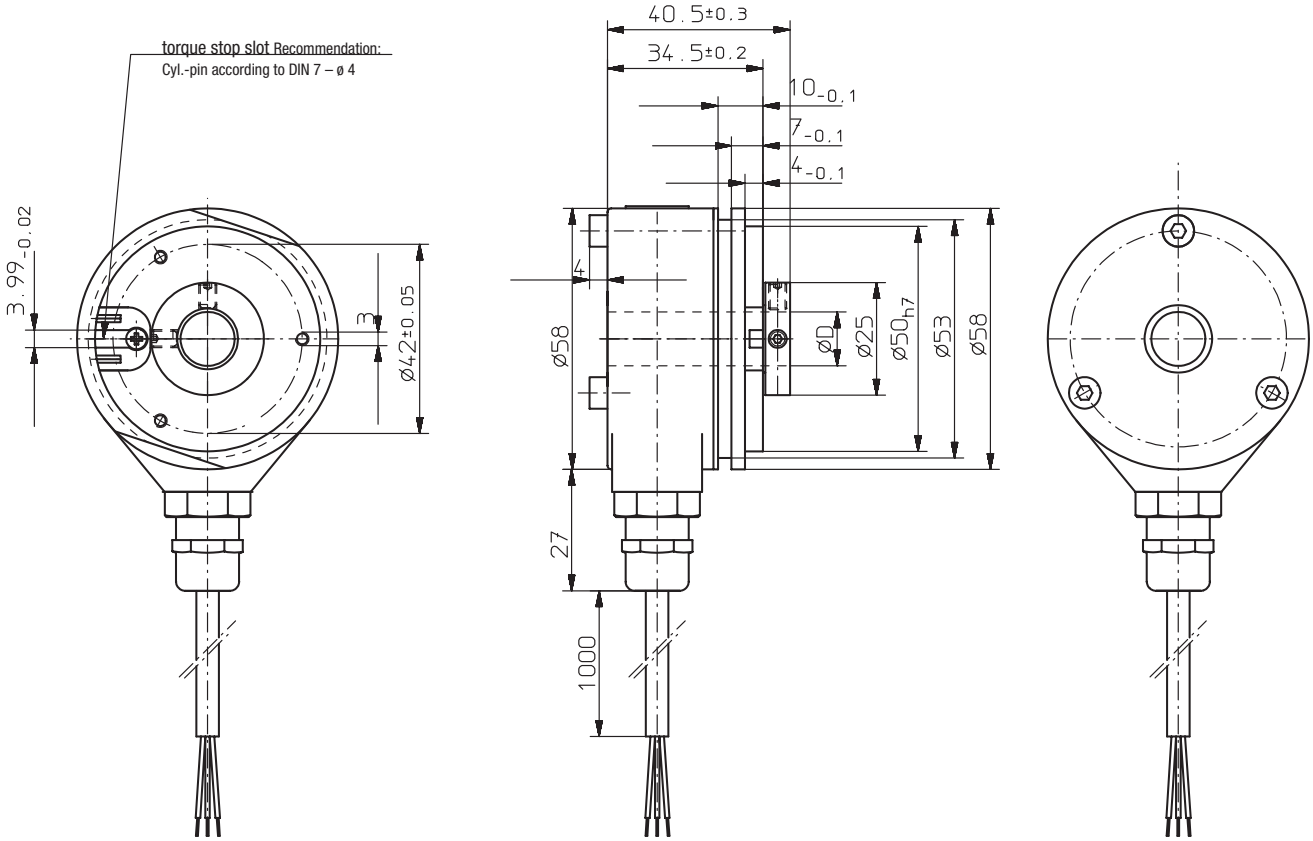

Mounting advice:

1) Do not connect rotary position sensor and drive rigidly to one another at shafts and flanges!

2) To mount a hollow shaft rotary position sensor, we recommend to use a torque stop pin that fits into the torque stop slot or a stator coupling.

3) When mounting the rotary position sensor ensure that Lmin. is larger than the axial play of the drive.

Incremental rotary position sensor hollow shaft version
NIRO Type 5826

Max. permissible drive shaft impact:
(measuring error ≤ ±0.5 bit)

	Mounting with stator coupling		Mounting with torque
Pulses:	permissible axial impact	permissible radial impact	permissible radial impact
up to 1000:	±0.4 mm	±0.09 mm	±0.075 mm
up to 2500:	±0.16	±0.036 mm	±0.028 mm
up to 5000:	±0.08 mm	±0.018 mm	±0.014 mm

Order code: **T8.5826.1XXX.XXXX**

Range

Flange with trough shaft

Shaft
- 6 = ø 10 mm
- 8 = ø 12 mm

Pulse rate
(e.g. 250 pulses=> 0250)

Type of connection
- 1 = Cable radial (1 m PVC-cable)

Output circuit and voltage supply
- 1 = RS 422 (with inverted signal) 5 V supply voltage
- 2 = Push-pull (without inverted signal) 10 ... 30 V supply voltage
- 3 = Push-pull (with inverted signal) 10 ... 30 V supply voltage
- 4 = RS 422 (with inverted signal) 10 ... 30 V supply voltage
- 5 = Push-pull (without inverted signal) 5 ... 30V supply voltage
- 6 = Push-pull (with inverted signal) 5 ... 30V supply voltage
- 7 = RS 422 (with inverted signal) 5 ... 30 V Supply voltage

Incremental rotary position sensor hollow shaft version
Large diameter Type A020

- Only 43 mm clearance needed
- Hollow shaft diameter up to 42 mm
- Very easy mounting. The rotary position sensor is mounted directly on the drive shaft without couplings. This saves up to 30 % cost and 60 % clearance compared to shaft versions.
- Temperature and ageing compensation
- Short-circuit proof outputs
- RS 422, push-pull or sine wave output
- Resolution up to 5000 ppr
- High scanning rate

Mechanical characteristics:

Speed with sealing[1]):	max. 6000 min^{-1}
Rotor moment of inertia:	appr. 65 x 10^{-6} kgm^2
Starting torque with sealing:	< 0.2 Nm
Weight:	appr. 0.7 kg
Protection acc. to EN 60 529 with sealing:	IP65
Working temperature with sealing:	-20° C ... +70 °C
Operating temperature with sealing:	-20° C ... +75 °C
Shaft:	stainless steel
Shock resistance acc. to DIN-IEC 68-2-27	2000 m/s^2, 6 ms
Vibration resistance acc. to DIN-IEC 68-2-6:	100 m/s^2, 10...2000 Hz

[1])for continuous operation max. 3000 min^{-1}

Pulse rates available at short notice:
360*, 512, 600, 1000, 1024, 1024, 1500, 2048, 2500, 4096, 5000

*not with sine wave output
Other pulse rates on request

Electrical characteristics RS 422 or push-pull output:

Output circuit:	RS 422 (TTL-compatible)	Push-pull
Supply voltage:	5 V (±5 %) or 10 ... 30 VDC	10 ... 30 VDC
Power consumption (no load) without inverted signal:	not available	typ. 55 mA / max. 125 mA
Power consumption (no load) with inverted signals:	typ. 70 mA / max. 100 mA	typ. 80 mA/ max.150 mA
Permissible load/channel:	max. ±20 mA	max. ±30 mA
Pulse frequency:	max. 300 kHz	max. 300 kHz
Signal level high:	min. 2.5 V	min. U_B–3 V
Signal level low:	max. 0.5 V	max. 2.5 V
Rise time tr	max. 200 ns	max. 1 µs
Fall time tf	max. 200 ns	max. 1 µs
Short circuit proof outputs:[1]):	yes[2])	yes
Reverse connection protection at U_B:	5 V:no 10 ... 30 V: yes	yes
Conforms to CE requirements acc. to EN 50082-2, EN 50081-2 and EN 55011 Class B		

[1])When supply voltage correctly applied
[2])Only one channel at a time: (when U_B = 5 V, short-circuit to channel, 0 V, or +U_B is permitted.)
(when U_B = 10 ... 30 V short-circuit to channel or 0 V is permitted.)

Electrical characteristics sine wave output:

Output circuit:	Sinus U = 1 Vpp	Sinus U = 1 Vpp
Supply voltage:	5 V (±5 %)	10 ... 30 VDC
Current consumption (no load) with inverted signals:	typ. 65 mA / max. 110 mA	typ. 65 mA / max. 110 mA
-3 dB frequency:	≥180 kHz	≥180 kHz
Signal level channels A/B:	1 Vpp (±20%)	1 Vpp (±20 %)
Signal level channel 0:	0.1 ... 1.2 V	0.1 .... 1.2 V
Short circuit proof outputs:[1]):	yes	yes
Reverse connection protection at UB:	no	yes
Conforms to CE requirements acc. to EN 50082-2, EN 50081-2 and EN 55011 Class B		

[1])When supply voltage correctly applied

Incremental rotary position sensor hollow shaft version
Large diameter Type A020

Terminal assignment

Signal:	0 V	0 V Sens[2)]	$+U_B$	$+U_B$ Sens[2)]	A	$\overline{A}$	B	$\overline{B}$	0	$\overline{0}$	⏚
Pin:	10	11	12	2	5	6	8	1	3	4	PH[1)]
Cable colour.:	WH	WH/ GY PK	BN	BN/ RD BU	GN	YE	GY	PK	BU	RD	

[1)] PH = Shield is attached to connector housing

[2)] The sensor cables are connected to the supply voltage internally if long feeder cables are involved they can be used to adjust or controll the voltage at the rotary position sensor

If the sensor cables are not in use, they have to be insulated or $0\ V_{Sensor}$ has to be connected to 0 V and $U_{BSENSOR}$ has to be connected to U_B.

Using RS 422 outputs and long cable distances, a wave impedance has to be applied at each cable end.

Insulate unused outputs before initial startup.

Dimensions:
plug verrsion

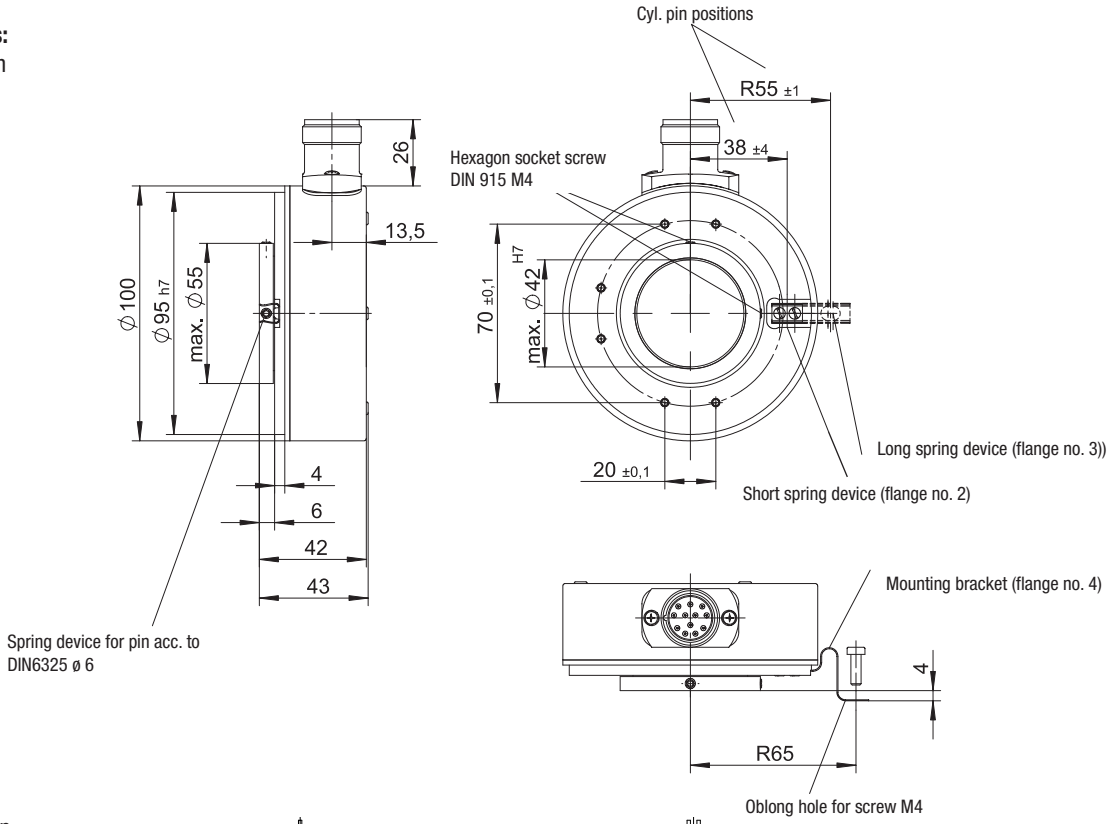

Cable version

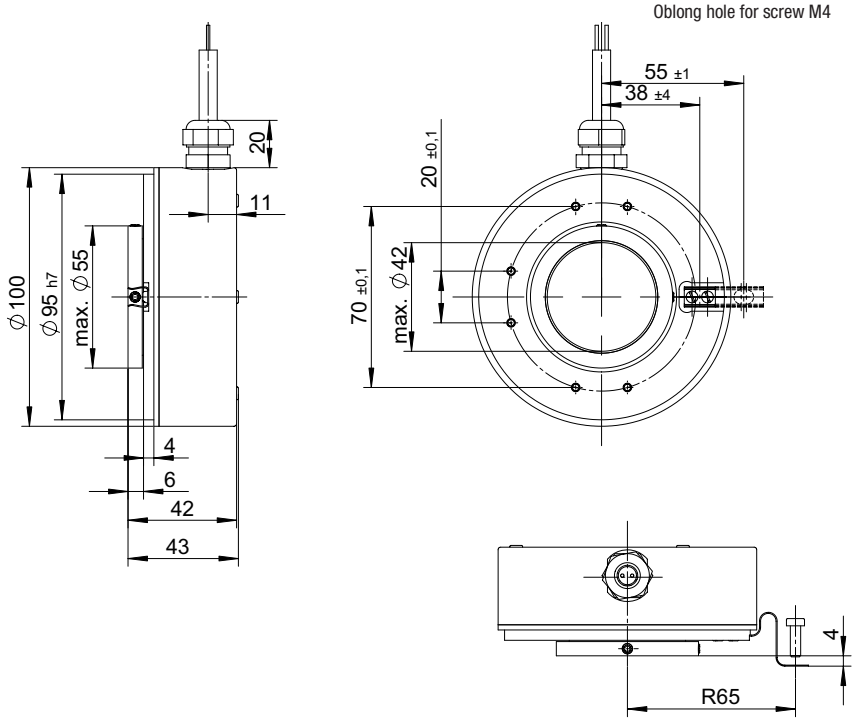

Incremental rotary position sensor hollow shaft version
Large diameter Type A020

Max. permissible drive shaft impact:
(measuring error ≤ ±0,5 bit)

Type of flange:	Permissible axial play	Permissible radial play	Permissible angular play
Flange type 2 (short spring device):	max. ±1 mm[1)]	max. ±0.3 mm	max. ±2°
Flange type 3 (long spring device):	∝[2)]	max. ±0.3 mm	max. ±2°
Flange type 4 (mounting bracket):	max. ±0.5 mm	max. ±0.3 mm	max. ±2°

[1)] When mounting the rotary position sensor ensure that Lmin. is larger than the axial play of the drive.

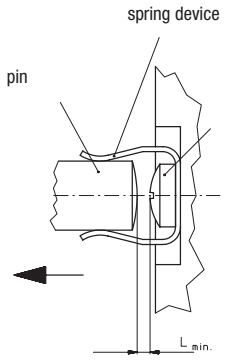

[2)] If mounted as shown. Otherwise as per flange type 2

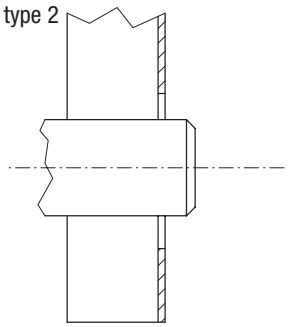

Top view of mating side, male contact base:
12 pin plug

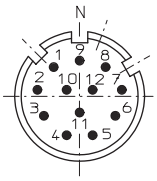

Order code:

T8.A020.XXXX.XXXX

Range

Flange
- 1 = without mounting aid
- 2 = with short spring device
- 3 = with long spring device
- 4 = with mounting bracket

Hollow shaft
- 1 = ø 42 mm
- 2 = ø 38 mm
- 3 = ø 28 mm
- 4 = ø 25.4 mm (1”)
- 5 = ø 25 mm
- 6 = ø 24 mm
- A = ø 30 mm
- B = ø 40 mm

Pulse rate
(e.g. 360 pulses=> 0360)

Type of connection
- 1 = Cable radial (1 m PVC-cable)
- 2 = radial 12 pin plug without mating connector

Output circuit and voltage display
- 1 = RS 422 (with inverted signal) 5 V supply voltage
- 2 = Push-pull (without inverted signal) 10 ... 30 V supply voltage
- 3 = Push-pull (with inverted signal) 10 ... 30 V supply voltage
- 4 = RS 422 (with inverted signal) 10 ... 30 V supply voltage
- 8 = SIN/COS 1 Vpp (mit Invertierungen) 5 V supply voltage
- 9 = SIN/COS 1 Vpp (with inverted signal 10 .. 30 V Supply voltage

Accessories:

Corresponding mating connector to connection type 2
Art.No T8.0000.5012.0000
Further accessories see accessories chapter.

Incremental rotary position sensor hollow shaft version
Large diameter Type 0320

- Sturdy incremental hollow shaft rotary position sensor
- Assembled directly to drive shaft without couplings
- Hollow shaft diameter 12 ... 25.4 mm (1”)
- This rotary position sensor combines the advantage of low profile and high mechanical requirements

Mechanical characteristics:

Speed:	max. 6000 min^{-1}
Rotor moment of inertia:	appr. 1,8 x 10^{-6} kgm^2
Starting torque:	< 0.15 Nm
Weight:	appr. 0.6 kg
Protection acc. to EN 60 529:	IP65
Working temperature:	-20° C ... +60 °C
Operating temperature:	-20° C ... +70 °C
Shaft:	stainless steel
Shock resistance acc. to DIN-IEC 68-2-27	1000 m/s^2, 6 ms
Vibration resistance acc. to DIN-IEC 68-2-6:	100 m/s2, 10...2000 Hz

Pulse rates available at short notice:

up to 3600

Higher pulse rates on request

Electrical characteristics:

Output circuit:	RS 422 (TTL-compatible)	Push-pull
Supply voltage:	5 V (±5 %)	11 ... 24 VDC (+20 %)
Power consumption (no load) without inverted signal:	-	typ. 55 mA / max. 80 mA
Power consumption (no load) with inverted signals:	typ. 70 mA / max. 100 mA	typ. 80 mA/ max.150 mA
Permissible load/channel:	max. ±50 mA	max. ±30 mA
Pulse frequency:	max. 50 kHz	max. 50 kHz
Signal level high:	min. 2.5 V	min. U_B–3 V
Signal level low:	max. 0.5 V	max. 2.5 V
Rise time tr	max. 200 ns	max. 1 µs
Fall time tf	max. 200 ns	max. 1 µs
Short circuit proof outputs:[1)]	yes[2)]	yes
Reverse connection protection at U_B:	no	yes
Conforms to CE requirements acc. to EN 50082-2, EN 50081-2 and EN 55011 Class B		

[1)] When supply voltage correctly applied

[2)] Only one channel at a time: (when U_B = 5 V, short-circuit to channel, 0 V, or +U_B is permitted.)
(when U_B = 10 ... 30 V short-circuit to channel or 0 V is permitted.)

Incremental rotary position sensor hollow shaft version
Large diameter Type 0320

Terminal assignment

Signal	0 V	$+U_B$	A	$\overline{A}$	B	$\overline{B}$	0	$\overline{0}$	Shield
12 pin plug; Pin:	1	2	3	5	4	6	7	8	PH[1)]
Cable colour:	BK 0,5 mm²	BU GY PK	BN 0,5 mm²	YE RD BU	BG	GN	PK	VI	

[1)]PH = Shield is attached to connector housing
- Using RS 422 outputs and long cable distances, a wave impedance has to be applied at each cable end.

Insulate unused outputs before initial startup.

Dimensions:

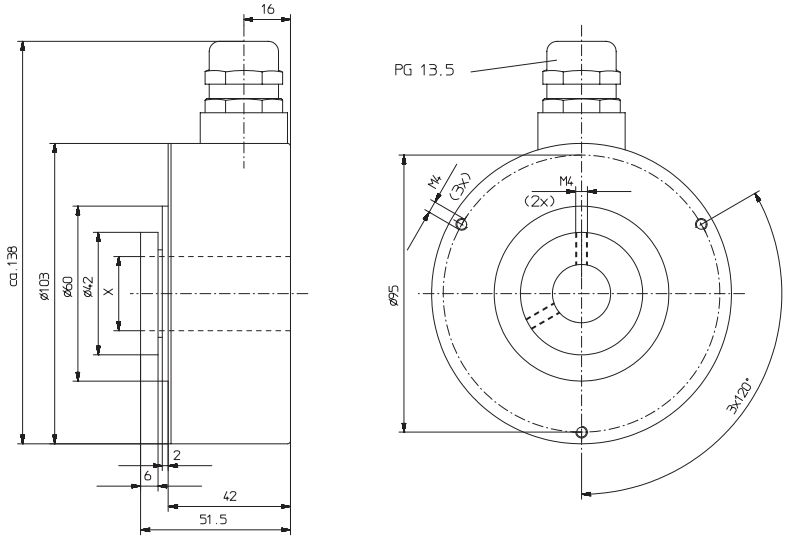

Mounting advice:

Do not connect rotary position sensor and drive rigidly to one another at shafts and flanges!

Top view of mating side, male contact base:

12 pin plug

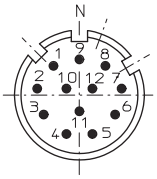

Order code:

T05.0320.XXXX.XXXX

Description of order code:

Range

Hollow shaft diameter

12 =	12 mm
14 =	14 mm
15 =	15 mm
16 =	16 mm
18 =	18 mm
20 =	20 mm
22 =	22 mm
24 =	24 mm
25 =	25 mm
75 =	25,4 mm (1”)

Pulse rate
(e.g. 360 pulses=> 0360)

Type of connection
- 1 = Cable radial (1 m PVC-cable)
- 2 = radial 12 pin plug without mating connector

Output circuit and supply voltage
- 1 = RS 422 (with inverted signal) 5 V supply voltage
- 2 = Push-pull (without inverted signal) 11 ... 24 V supply voltage
- 3 = Push-pull (with inverted signal) 11 ... 24 V supply voltage
- 4 = RS 422 (with inverted signal) 11 ... 24 V supply voltage

Incremental rotary position sensor shaft version
Heavy duty Type 9000

- Especially designed for heavy-duty applications
- IP66
- Impermeable connectors (IP67 even when not connected)
- High-flex PUR cable with chemical resistance (long term drag-resistance at –20 °C ... + 70 °C)
- Electronic temperature and ageing compensation
- Large temperature range
- Short-circuit protected outputs

Areas of application:
machine engineering, steel industry, forestry road construction and wood industry

Mechanical characteristics:

Drehzahl:	max. 6000 min^{-1}
Trägheitsmoment des Rotors:	ca. 15 x 10^{-6} kgm^2
Anlaufdrehmoment:	< 0.05 Nm
Wellenbelastbarkeit radial:	140 N
Wellenbelastbarkeit axial:	70 N
Gewicht:	ca. 1.2 kg
Schutzart nach EN 60 529:	IP66
Arbeitstemperaturbereich:	-20° C ... +85 °C[1)]
Betriebstemperaturbereich:	-20° C ... +90 °C[1)]
Welle:	nichtrostender Stahl
Schockfestigkeit nach DIN-IEC 68-2-27:	1000 m/s^2, 6 ms
Vibrationsfestigkeit nach DIN-IEC 68-2-6:	100 m/s^2, 10...2000 Hz

[1)] 80 °C bei Kabelausführung

Pulse rates available at short notice:
10, 20, 25, 30, 50, 60, 100, 120, 125, 127, 150, 180, 200, 216, 240, 250, 254, 256, 300, 314, 360, 375, 400, 500, 512, 600, 625, 720, 745, 750, 762, 800, 900, 927, 1000, 1024, 1250, 1270, 1400, 1500, 1800, 2000, 2048, 2250, 2400, 2500, 3000, 3600, 4000, 4096, 5000

Other pulse rates on request

Electrical characteristics:

Ausgangsschaltung:	RS 422 (TTL-kompatibel)	Gegentakt
Versorgungsspannung:	5 V (±5 %) oder 10 ... 30 VDC	10 ... 30 VDC
Stromaufnahme (ohne Last) ohne Invertierung:	-	typ. 55 mA / max. 125 mA
Stromaufnahme (ohne Last) mit Invertierung:	typ. 70 mA / max. 100 mA	typ. 80 mA/ max.150 mA
Zul. Last/Kanal:	max. ±20 mA	max. ±30 mA
Impulsfrequenz:	max. 300 kHz	max. 300 kHz
Signalpegel high:	min. 2.5 V	min. U_B–3 V
Signalpegel low:	max. 0.5 V	max. 2.5 V
Anstiegszeit t_r	max. 200 ns	max. 1 µs
Abfallzeit t_f	max. 200 ns	max. 1 µs
Kurzschlussfeste Ausgänge[1)]	ja[2)]	ja
Verpolschutz der Versorgungsspannung:	nein, 10 ... 30 V: ja	ja
CE-konform gemäß EN 50082-2, EN 50081-2 und EN 55011 Klasse B		

[1)] Bei korrekt angelegter Versorgungsspannung

[2)] Nur max. ein Kanal darf kurzgeschlossen sein:
(bei U_B = 5 V ist Kurzschluss gegenüber einem anderen Kanal, 0 V, oder +U_B zulässig.)
(bei U_B = 10 ... 30 V ist Kurzschluss gegenüber einem anderen Kanal oder 0 V zulässig.)

Incremental rotary position sensor shaft version
Heavy duty Type 9000

Terminal assignment

Signal:	0 V	0 V Sensor[2)]	$+U_B$	$+U_B$ Sensor[2)]	A	$\overline{A}$	B	$\overline{B}$	0	$\overline{0}$	Shield
12 pin plug, Pin:	10	11	12	2	5	6	8	1	3	4	PH[1)]
Cable colour:	WH 0.5 mm²	WH or GY PK	BN 0,5 mm²	BN or RD BU	GN	YE	GY	PK	BU	RD	

[1)] PH = Shield is attached to connector housing

[2)] The sensor cables are connected to the supply voltage internally if long feeder cables are involved they can be used to adjust or controll the voltage at the rotary position sensor

- If the sensor cables are not in use, they have to be insulated or 0 VSensor has to be connected to 0 V and $U_{BSensor}$ has to be connected to U_B

- Using RS 422 outputs and long cable distances, a wave impedance has to be applied at each cable end.
Insulate unused outputs before initial startup.

Dimensions:

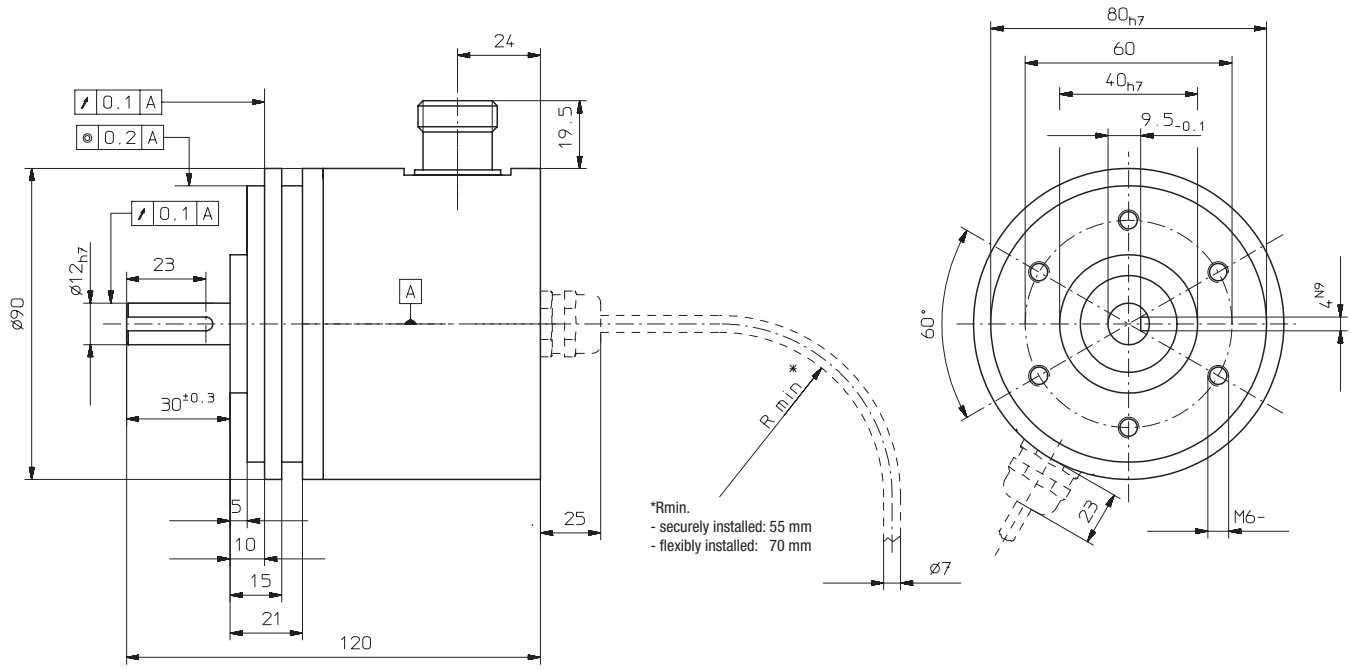

Top view of mating side, male contact base:

12 PIN PLUG

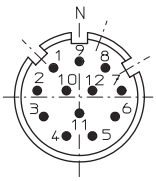

Mounting advice:

Do not connect rotary position sensor and drive rigidly to one another at shafts and flanges!
Always use couplings to prevent shaft overload (see accessories chapter).

Order code:

T8.9000.11XX.XXXX

Range

Type of connection and supply voltage
- 4 = RS 422 (with inverted signal) 5 V supply voltage
- 5 = RS 422 (with inverted signal) 10 ... 30 V supply voltage
- 6 = Push-pull (with inverted signal) 10 ...30 V supply voltage
- 7 = Push-pull (without inverted signal) 10 ... 30 V supply voltage

Pulse rate
(e.g. 250 pulses=> 0250)

Type of connection
- 1 = Cable axial (1 m PUR-cable)
- 2 = Cable radial (1 m PUR-cable)
- 3 = axial 12 pin plug axial without mating connector
- 5 = radial 12 pin plug without mating connector

Accessories:

Corresponding mating connector to connection type of 3 or 5
Art.-no. T8.0000.5012.0000

Incremental rotary position sensor shaft version
Heavy duty Type 9000 stainless steel

- Stainless steel housing and shaft
- IP66
- Highly flexible, chemical resistant PUR-cable (stands up under constant trailing at -20 °C up to 70 °C)
- Temperature and ageing compensation
- Precision graduation at high resolution
- Large temperature range
- Short-circuit proof outputs

Applications:

Food- and pharmaceutical industry, automatic packaging machines, bottling plants, chemical process technology

Mechanical characteristics:

Speed:	max. 6000 min^{-1}
Rotor moment of inertia:	appr. 15 x 10^{-6} kgm^2
Starting torque:	< 0.05 Nm
Radial load capacity of shaft*:	140 N
Axial load capacity of shaft:*:	70 N
Weight:	appr. 2.8 kg
Protection acc. to EN 60 529:	IP66
Working temperature:	-20° C ... +80 °C
Operating temperature:	-20° C ... +85 °C
Shaft:	stainless steel
Shock resistance acc. to DIN-IEC 68-2-27	1000 m/s^2, 6 ms
Vibration resistance acc. to DIN-IEC 68-2-6:	100 m/s^2, 10...2000 Hz

Pulse rates available at short notice:

10, 20, 25, 30, 50, 60, 100, 120, 125, 127, 150, 180, 200, 216, 240, 250, 254, 256, 300, 314, 360, 375, 400, 500, 512, 600, 625, 720, 745, 750, 762, 800, 900, 927, 1000, 1024, 1250, 1270, 1400, 1500, 1800, 2000, 2048, 2250, 2400, 2500, 3000, 3600, 4000, 4096, 5000

Other pulse rates on request

Electrical characteristics:

Output circuit:	RS 422 (TTL-compatible)	Push-pull
Supply voltage:	5 V (±5 %) or 10 ... 30 VDC	10 ... 30 VDC
Power consumption (no load) without inverted signal:	-	typ. 55 mA / max. 125 mA
Power consumption (no load) with inverted signals:	typ. 70 mA / max. 100 mA	typ. 80 mA/ max.150mA
Permissible load/channel:	max. ±20 mA	max. ±30 mA
Pulse frequency:	max. 300 kHz	max. 300 kHz
Signal level high:	min. 2.5 V	min. U_B–3 V
Signal level low:	max. 0.5 V	max. 2.5 V
Rise time t_r	max. 200 ns	max. 1 µs
Fall time t_f	max. 200 ns	max. 1 µs
Short circuit proof outputs:[1)]	yes[2)]	yes
Reverse connection protection at UB:	no; 10 ... 30 V: yes	yes
Conforms to CE requirements acc. to EN 50082-2, EN 50081-2 and EN 55011 Class B		

[1)] When supply voltage correctly applied

[2)] Only one channel at a time: (when U_B = 5 V, short-circuit to channel, 0 V, or +U_B is permitted.)
(when U_B = 10 ... 30 V short-circuit to channel or 0 V is permitted.)

Incremental rotary position sensor shaft version
Heavy duty Type 9000 stainless steel

Terminal assignment

Signal:	0V	0V Sensor[2)]	$+U_B$	$+U_B$ Sensor[2)]	A	$\overline{A}$	B	$\overline{B}$	0	$\overline{0}$	Shield
Cable colour:	WH 0.5 mm²	WH or. GY PK	BN 0,5 mm²	BN or RD BU	GN	YE	GY	PK	BU	RD	

1)PH = Shield is attached to connector housing

2)The sensor cables are connected to the supply voltage internally if long feeder cables are involved they can be used to adjust or controll the voltage at the rotary position sensor

- If the sensor cables are not in use, they have to be insulated or 0 VSensor has to be connected to 0 V and $U_{BSensor}$ has to be connected to U_B

- Using RS 422 outputs and long cable distances, a wave impedance has to be applied at each cable end.
Insulate unused outputs before initial startup.

Dimensions:

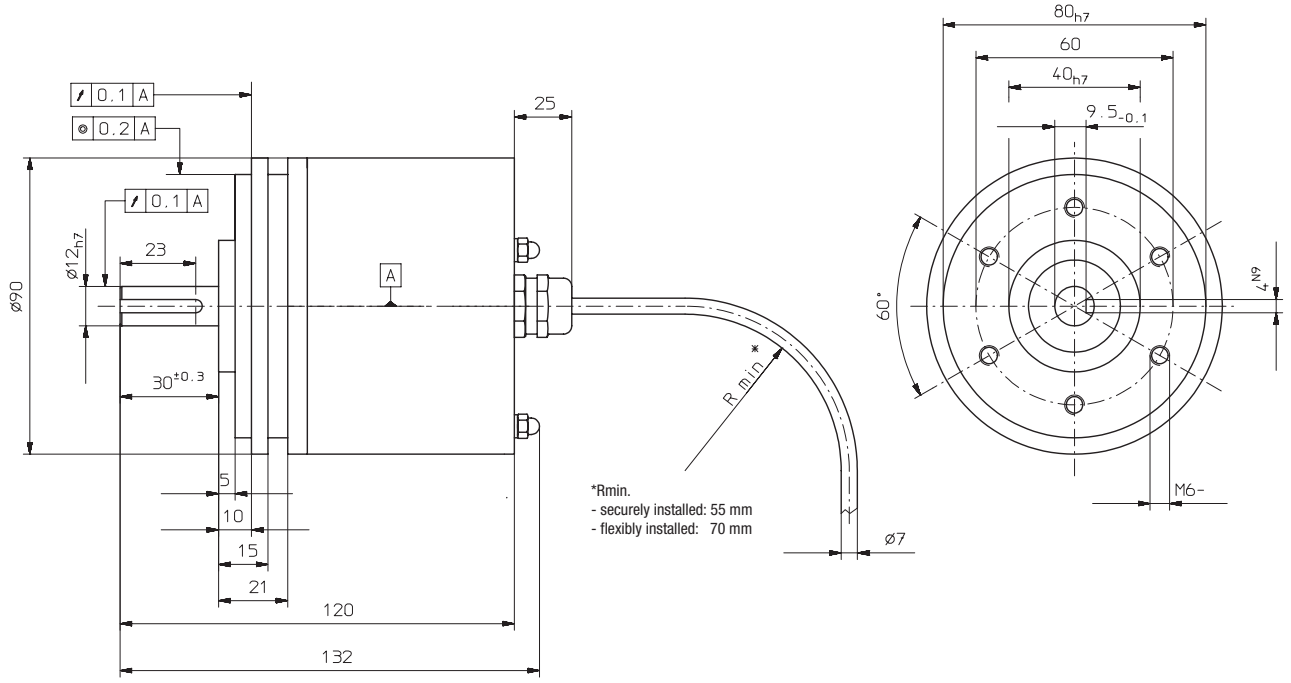

Mounting advice:

Do not connect rotary position sensor and drive rigidly to one another at shafts and flanges!
Always use couplings to prevent shaft overload (see accessories chapter)

Order code:

T8.9000.11X1.XXXX.5007

Range

Output circuit and voltage display
- 4 = RS 422 (with inverted signal), 5 V supply voltage
- 5 = RS 422 (with inverted signal), 10 ... 30 V supply voltage
- 6 = Push-pull (with inverted signal), 10 .. 30 V supply voltage
- 7 = Push-pull (without inverted signal), 10 ... 30 V supply voltage

Stainless steel housing

Pulse rate
(e.g. 250 pulses=> 0250)

Type of connection
1 = cable axial (1 m PUR-cable)

Accessories:

See accessories chapter

Incremental rotary position sensor
EX proof Type 7030

- Very compact design, housing Ø 70 mm with EEx d IIC T6 approval
- Hollow shaft or shaft Ø 12 mm
- Very easy mounting. The hollow shaft rotary position sensor is mounted directly on the drive shaft without couplings. This saves up to 30 % cost and 60 % clearance compared to shaft versions
- Resolution up to 5000 ppr
- Temperature and ageing compensation
- Short-circuit proof outputs
- Reverse connection protection for voltage supply

Mechanical characteristics:

Speed:	max. 6000 min^{-1}
Rotor moment of inertia:	appr. 15 x 10^{-6} kgm^2
Starting torque:	< 0.05 Nm
Radial load capacity of shaft:	20 N (shaft version)
Axial load capacity of shaft::	10 N (shaft version)
Weight:	appr. 1.2 kg
Protection acc. to EN 60 529:	IP64
Working temperature:	-20° C ... +60 °C
Shaft:	stainless steel
Shock resistance acc. to DIN-IEC 68-2-27	1000 m/s^2, 6 ms
Vibration resistance acc. to DIN-IEC 68-2-6:	100 m/s^2, 10 ... 2000 Hz

Pulse rates available at short notice:
10, 20, 25, 30, 50, 60, 100, 120, 125, 127, 150, 180, 200, 216, 240, 250, 254, 256, 300, 314, 360, 375, 400, 500, 512, 600, 625, 720, 745, 750, 762, 800, 900, 927, 1000, 1024, 1250, 1270, 1400, 1500, 1800, 2000, 2048, 2250, 2400, 2500, 3000, 3600, 4000, 4096, 5000

Other pulse rates on request

Electrical characteristics:

Output circuit:	RS 422 (TTL-compatible)	Push-pull
Supply voltage:	5 V (±5 %) or 10 ... 30 VDC	10 ... 30 VDC
Power consumption (no load) without inverted signal:	-	typ. 55 mA / max. 125 mA
Power consumption (no load) with inverted signals:	typ. 70 mA / max. 100 mA	typ. 80 mA/ max.150 mA
Permissible load/channel:	max. ±20 mA	max. ±30 mA
Pulse frequency:	max. 300 kHz	max. 300 kHz
Signal level high:	min. 2.5 V	min. U_B –3 V
Signal level low:	max. 0.5 V	max. 2.5 V
Rise time tr	max. 200 ns	max. 1 µs
Fall time tf	max. 200 ns	max. 1 µs
Short circuit proof outputs:[1)]	yes[2)]	yes
Reverse connection protection at UB:	no	yes
Conforms to CE requirements acc. to EN 50082-2, EN 50081-2 and EN 55011 Class B		

[1)] When supply voltage correctly applied
[2)] Only one channel at a time: (when U_B = 5 V, short-circuit to channel, 0 V, or +U_B is permitted.)
(when U_B = 10 ... 30 V short-circuit to channel or 0 V is permitted.)

Please note!
– All standards for installation of electrical systems in hazardous environment have to be observed.
– Manipulations (opening, mechanical treatment etc.) cause the loss of the EX–license, warranty claims will not be accepted and the installer will be responsible for any consequential damages.

Incremental rotary position sensor
EX proof Type 7030

Terminal assignment

Signal:	0V	0V Sensor[2)]	$+U_B$	$+U_B$ Sensor[2)]	A	$\overline{A}$	B	$\overline{B}$	0	$\overline{0}$	Shield
Cable colour:	WH	GY PK	BN	RD BU	GN	YE	GY	PK	BU	RD	PH[1)]

[1)] PH = Shield is attached to connector housing

[2)] The sensor cables are connected to the supply voltage internally if long feeder cables are involved they can be used to adjust or controll the voltage at the rotary position sensor

- If the sensor cables are not in use, they have to be insulated or $0\,V_{Sensor}$ has to be connected to 0 V and $U_{BSensor}$ has to be connected to U_B

- Using RS 422 outputs and long cable distances, a wave impedance has to be applied at each cable end.

Insulate unused outputs before initial startup.

Dimensions:

7030.14xx

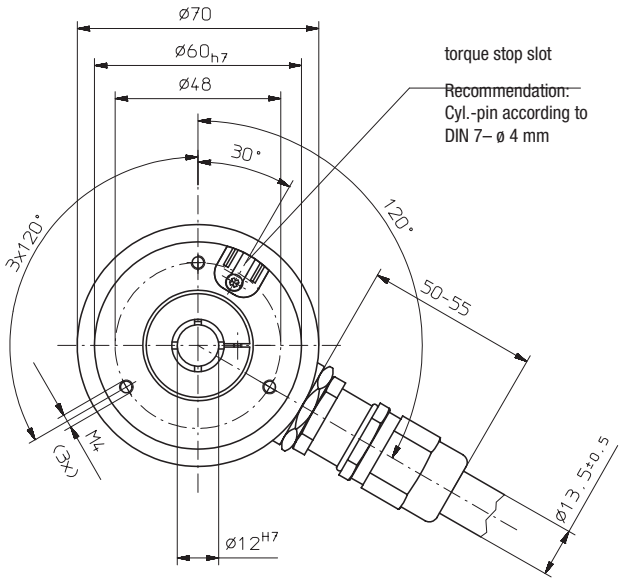

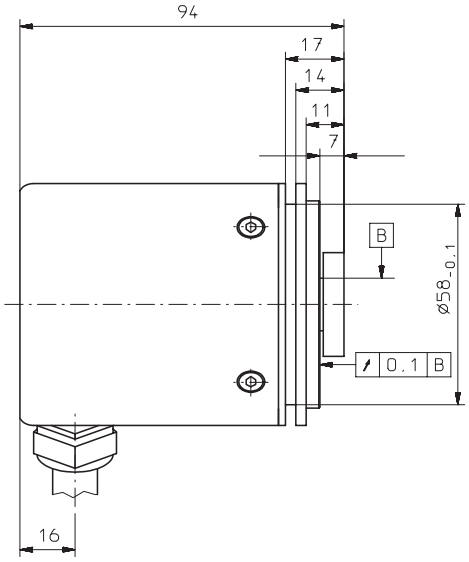

7030.25xx

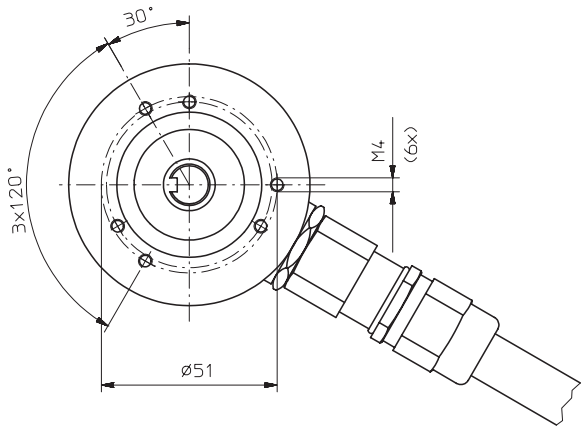

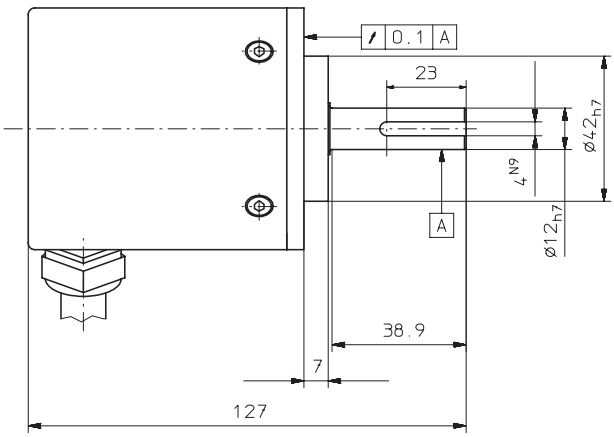

Incremental rotary position sensor
EX proof Type 7030

7030.26xx

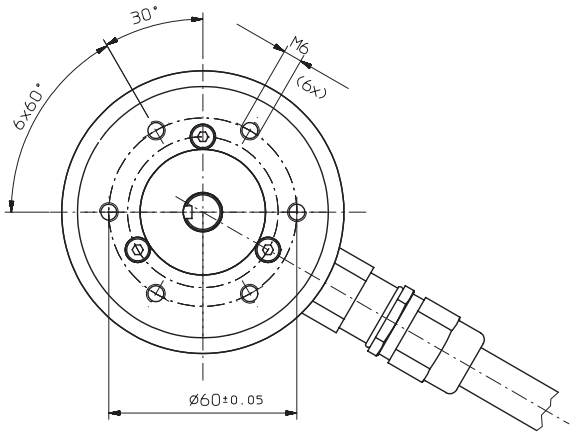

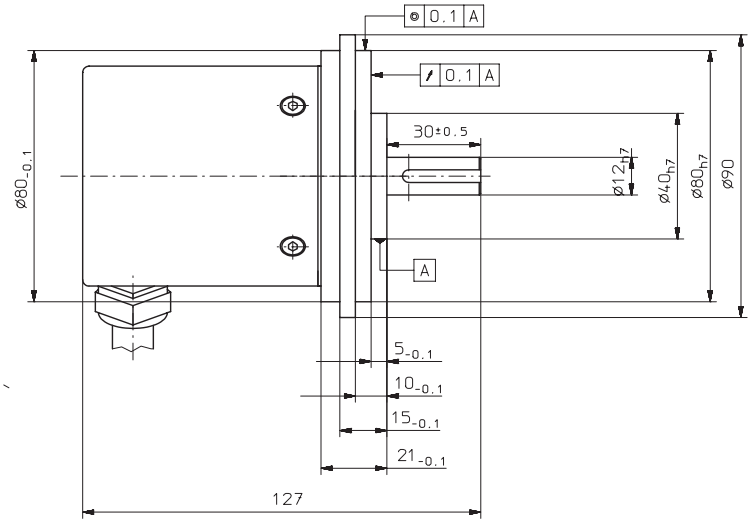

Max. permissible drive shaft impact:

(measuring error ≤ ±0.5 bit)

Pulses	Mounting with torque support permissible radial impact
up to 1000	± 0.08 mm
up to 2500	±0.035 mm
up to 5000	±0.017 mm

Order code:

T8.7030.XXXX.XXXX

Range

Flange and hollow shaft or shaft
- 14 = Synchronous flange with hollow shaft ø 12 mm
- 25 = Clamping flange with shaft ø 12 mm
- 26 = Clamping flange with shaft ø 12 mm and mounted flange adapter
- 27 = hollow Shaft ø 12 mm with stator coupling

Pulse rate
(e.g. 250 pulses=> 0250)

Type of connection
- 2 = Cable radial (2 m PVC-cable) other cable lengths on request

Output circuit and voltage supply
- 1 = RS 422 (with inverted signal) 5 V supply voltage
- 2 = Push-pull (without inverted signal) 10 ... 30 V supply voltage
- 3 = Push-pull (with inverted signal) 10 ... 30 V supply voltage
- 4 = RS 422 (with inverted signal) 10 ... 30 V supply voltage

Accessories:

See accessories chapter

Absolute singleturn rotary position sensor shaft version Universal Type 5850

- Highest shock resistance on the market (≥2500 m/s^2, 6 ms acc. to DIN IEC 68-2-27)
- SSI, parallel or current (4 ... 20 mA) interface
- Divisions: up to 16384 (14 bits), singleturn
- Housing Ø 58 mm
- IP65
- Various options (e.g. LATCH, SET...)
- Gray, Binary or BCD code

- Temperature and ageing compensation

- Short-circuit proof outputs
- Patented new type of construction integrates all components; use of an opto-asic and 6-layer multilayer technology now on just a single PCB with resolution of up to 14 bits.

- **New:** 4 ... 20 mA output

Mechanical characteristics:

Speed:	max. 12000 min^{-1}
Rotor moment of inertia:	appr. 1,8 x 10^{-6} kgm^2
Starting torque:	< 0.01 Nm
Radial load capacity of shaft:	80 N
Axial load capacity of shaft::	40 N
Weight:	appr. 0.4 kg
Protection acc. to EN 60 529:	IP65
Working temperature:	-20° C ... +85 °C[1)]
Operating temperature:	-20° C ... +90 °C[1)]
Shaft:	stainless steel
Shock resistance acc. to DIN-IEC 68-2-27	2500 m/s^2, 6 ms
Vibration resistance acc. to DIN-IEC 68-2-6:	100 m/s^2, 10...2000 Hz

[1)] 80 °C with cable

Divisions and code types available at short notice

Gray/Binary
250, 360[1)], 500, 720[1)], 900, 1000[1)], 1024 (10 Bit)[1)], 1250, 1440, 1800, 2000, 2500, 2880, 3600[1)], 4000, 4096 (12 Bit)[1)], 5000, 7200, 8192 (13 Bit)[1)], 16384 (14 Bit)[1)]

BCD
250, 360[1)], 500, 720[1)], 900, 1000[1)], 1024 (10 Bit)[1)], 1250, 1440, 1800, 2000
Other on request

Preferred divisions are bold
(reduced delivery time).

Electrical characteristics SSI or parallel interface:

Interface type:	Synchronous-Serial (SSI)	Synchronous-Serial (SSI)	Parallel	Parallel
Supply voltage (U_B):	5 VDC (± 5 %)	10 ... 30 VDC	5 VDC (± 5 %)	10 ... 30 VDC
Output driver:	RS 485	RS 485	Push-pull	Push-pull
Current consumption typ.:	89 mA	89 mA	109 mA	109 mA
(no load) max.:	138 mA	138 mA	169 mA	169 mA
Permissible load/channel:	max. +/- 20 mA	max. +/- 20 mA	max. +/- 10 mA	max. +/- 10 mA
Word change frequency	max. 15.000/s	max.15.000/s	40.000/s	40.000/s
SSI pulse rate min./max.:	100 kHz/500 kHz	100 kHz/500 kHz	-	-
Signal level high:	typ. 3.8 V	typ. 3.8 V	min.3,4 V	min. U_B – 2.8 V
Signal level low (I_{Load} = 20 mA):	typ. 1.3 V	typ. 1.3 V	-	-
(I_{Load} = 10 mA):	-	-	max. 1.5 V	max. 1.8 V
(I_{Load} = 1 mA):	-	-	max. 0.3 V	-
Rise time t_r (without cable):	max. 100 ns	max. 100 ns	max. 0.2 µs	max. 1 µs
Fall time t_f (without cable):	max. 100 ns	max. 100 ns	max. 0.2 µs	max. 1 µs
Short circuit proof outputs:[1)]:	yes	yes[2)]	yes	yes
Reverse connection protection at U_B:	no	yes	no	yes
Conforms to CE requirements acc. to EN 50082-2, EN 50081-2 and EN 55011 Class B				

[1)] When supply voltage correctly applied
[2)] Only one channel at a time: when U_B = 5 VDC, short-circuit to channel, 0 V or U_B is permitted.
When U_B = 10 ... 30 VDC short-circuit to channel or 0 V is permitted.

Absolute singleturn rotary position sensor shaft version
Universal Type 5850

Electrical characteristics current interface 4 ... 20 mA

Sensor part		
Interface type:	4 ... 20 mA	4 ... 20 mA
Supply voltage (U_B):	10 ... 30 VDC	5 VDC
Current consumption typ.:	70 mA	70 mA
(no load) max.:	84 mA	84 mA
Word change frequency	max. 15.000/s	max. 15.000/s

Current loop		
Supply voltage:	10 ... 30 VDC	10 ... 30 VDC
Analogue signal	4 ... 20 mA	4 ... 20 mA
max. input resistance of the input circuit	200 Ω	200 Ω
Measuring rage:	0 ... 360 °	0 ... 360 °
Max. Failure (25 °C):	0.2 °	0.2 °
Resolution	13 Bit	13 Bit
Building up time	max. 2 ms	max. 2 ms
Temperature coefficient:	0.1°/10 K	0.1°/10 K
Current if detector error:	≤ 3.5 mA	≤ 3.5 mA
Sensor and current loop are galvanically insulated		
Conforms to CE requirements acc. to EN 50082-2, EN 50081-2 and EN 55011 Class B		

Control inputs:

Up/down input to switch the counting direction

As a standard, absolute rotary position sensors deliver increasing code values when the shaft rotates clockwise (cw), when looking from the shaft side. When the shaft rotates counter-clockwise (ccw), the output delivers accordingly decreasing code values. The same applies to models with current interfaces. When the shaft rotates clockwise, the output delivers increasing current values, and decreasing values when it rotates counter-clockwise.

As long as the Up/down input receives the corresponding signal (high), this feature is reversed. Clockwise rotation will deliver decreasing code/current values while counter-clockwise rotation will deliver increasing code/current values.

The response time is : for 5 VDC supply voltage, 0.4 ms
for 10-30 VDC supply voltage, 2 ms.

SET input

This input is used to reset (to zero) the rotary position sensor. A control pulse (high) sent to this input allows storing the current position value as new zero position in the rotary position sensor.
For models equipped with a current interface, the analogue output (4 ... 20 mA) will be set accordingly to the value 4 mA.
Note : before activating the SET input after supplying the rotary position sensor with the supply voltage, a counting direction (cw or ccw) must be defined univocally on the Up/down input!

The response time is : for 5 VDC supply voltage, 0.4 ms
for 10 ... 30 VDC supply voltage, 2 ms.

LATCH input

This input is used to „freeze“ the current position value. The position value will be statically available on the parallel output as long as this input will remain active (high).

The response time is : for 5 VDC supply voltage, 140 µs,
for 10 ... 30 VDC
supply voltage, 200 µs.

Switching level of the control inputs:

Supply voltage:	5 VDC	10 ... 30 VDC
low	≤1.7 V	≤ 4.5 V
high	≥3.4 V	≥8.7 V

Absolute singleturn rotary position sensor shaft version
Universal Type 5850

Terminal assignment (SSI interface with 12pin plug or cable):

Sig.:	0V	+UB	+T	-T	+D	-D	ST	VR					⏚
Cable colour:	WH	BN	GN	YE	GY	PK	BU	RD	BK	VT	GY PK	RD BU	
Pin:	1	2	3	4	5	6	7	8	9	10	11	12	PH

T: Clock signal
D: Data signal
ST: SET input. The current position value is stored as new zero position.
VR: Up/down input. As long as this input is active, decreasing code values are transmitted when shaft turning clockwise.
PH: Plug housing
Insulate unused outputs before initial start-up.

Terminal assignment (Parallel interface, up to 13 bits and max. 2 options, 17 pin plug):

Signal:	0V	+UB	1	2	3	4	5	6	7	8	9	10	11	12	13	ST/ VR	VR/ LH	⏚
colour:	WH	BN	GN	YE		GY	PK		BU		RD	BK		VT		GY	RD	
WH		BN		WH		YE	WH											
											PK	BU	GN	GN	YE	BN	GY	
Pin:	1	2	3	4	5	6	7	8	9	10	11	12	13	14	15	16	17	PH

Terminal assignment (Parallel interface, 14 bits and max. 2 options, cable version):

Signal:	0V	$+U_B$	1	2	3	4	5	6	7	8	9	10	11	12	13	ST/ VR	VR/ LH	14	⏚
Cable colour:	WH	BN	GN	YE	GY	PK	BU	RD	BK	VT	GY PK	RD BU	WH GN	BN GN	WH YE	YE BN	WH GY	GY BN	

Terminal assignment (Parallel interface, 14 bits, 1 option, 17 pin plug):

Signal.:	0 V	$+U_B$	1	2	3	4	5	6	7	8	9	10	11	12	13	ST/ VR/ LH	14	⏚
Pin:	1	2	3	4	5	6	7	8	9	10	11	12	13	14	15	16	17	PH

Sig.: 1 =MSB; 2 = MSB-1; 3 = MSB-2 etc.
ST: SET input. The current position value is stored as new zero position.
VR: Up/down input. As long as this input is active, decreasing code values are transmitted when shaft turning clockwise.
LH: LATCH input. High active. The current position is „frozen“. It is statically available at the parallel output.
PH: Plug housing
Insulate unused outputs before initial start-up.

Terminal assignment (Current interface 4 ... 20 mA, 12pin plug):

Signal.	0V	+UB	—	—	I+	I-	ST	VR					⏚
Cable colour:	WH	BN	GN	YE	GY	PK	BU	RD	BK	VT	GY PK	RD BU	
Pin:	1	2	3	4	5	6	7	8	9	10	11	12	PH

+I: Input of the current loop
-I: Output of the current loop
ST: SET input. The output current is set to 4 mA.
VR: Up/down input. As long as this input is active, decreasing current values are transmitted when shaft turning clockwise.
PH: Plug housing

Absolute singleturn rotary position sensor shaft version
Universal Type 5850

Dimensions:

Clamping flange mit Shaft ø 10

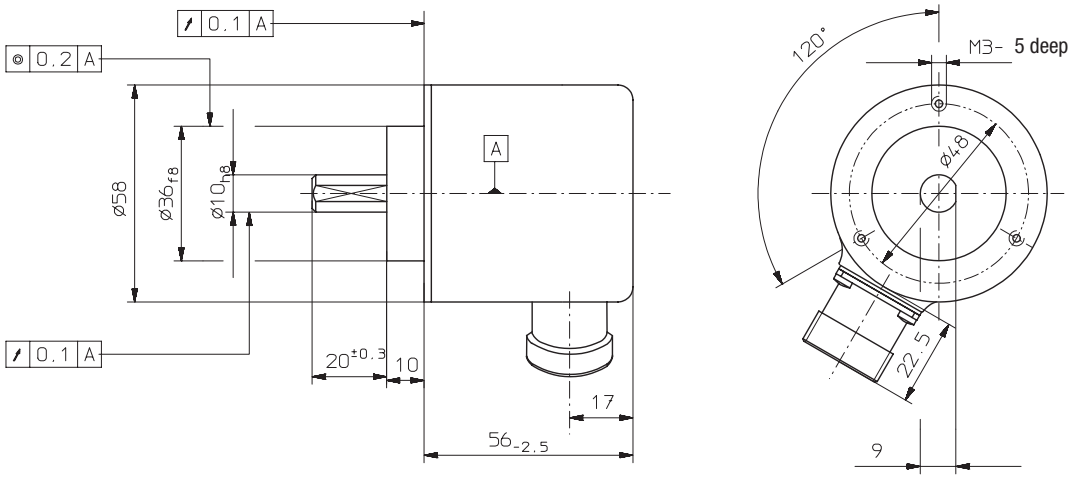

Synchronous flange with shaft ø 6 mm

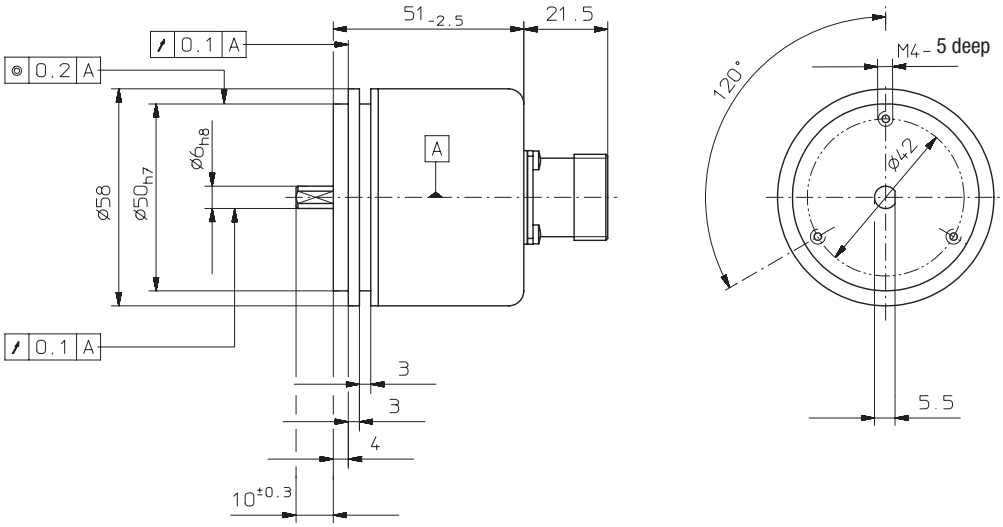

Top view of mating side, male contact base:

12 pin plug

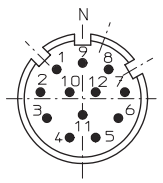

17 pin plug

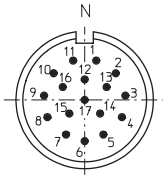

Absolute singleturn rotary position sensor shaft version
Universal Type 5850

Order code:

T8.5850.XXXX.XXXX

Range

Flange
- 1 = Clamping flange
- 2 = Synchronous flange

Shaft (ø x L)
- 1 = ø 6 mm x 10 mm
- 2 = ø 10 mm x 20 mm

Interface and supply voltage
- 1 = SSI mit 5 V supply voltage
- 2 = SSI mit 10 ... 30 V supply voltage
- 3 = Parallel mit 5 V supply voltage
- 4 = Parallel mit 10 ... 30 V supply voltage
- 7 = 4 ... 20 mA mit 5 V supply voltage
- 8 = 4 ... 20 mA mit 10 ... 30 V supply voltage

Options
- 2 = SET[1] and V/R
- 3[2] = SET and Latch[1]
- 4[2] = V/R[1] and Latch

ALARM output on request

[1] at 14 bits parallel output and 17pin plug

[2] Not with SSI or current interface

Code type and division
use corresponding table

Type of connection
- 1 = Cable axial (1 m PVC-cable)
- 2 = Cable radial(1 m PVC-cable)
- 3 = axial plug without mating connector
- 5 = radial plug without mating connector

Accessories:
Corresponding mating connector to connection type 3 and 5
- at SSI or current interface
  Art.No T8.0000.5012.0000
- at parallel interface
  Art.No T8.0000.5042.0000

Further accessories see rotary position sensor catalogue, accessories chapter

Code type and division for rotary position sensor with parallel output
(Interface and supply voltage, version 3 or 4)

Division	Order code Gray/Gray-Excess	Order code Binary	Order code BCD
250	E02	B02	D02
360	E03	B03	D03
500	E05	B05	D05
720	E07	B07	D07
900	E09	B09	D09
1000	E01	B01	D01
1024 (10 Bit)	G10	B10	D10
1250	E12	BA2	DA2
1440	E14	BA1	DA1
1800	E18	B18	D18
2000	E20	B20	D20
2500	E25	B25	
2880	E28	B28	
3600	E36	B36	
4000	E40	B40	
4096 (12 Bit)	G12	B12	
5000	E50	B50	
7200	E72	B72	
8192 (13 Bit)	G13	B13	
16384 (14 Bit)	G14	B14	

Preferred divisions are bold

Code type and division for rotary position sensor with SSI output
Interface and supply voltage, version 1 or 2

Division	Order code Gray	Order code Binary
1024 (10 Bit)	G10	B10
4096 (12 Bit)	G12	B12
8192 (13 Bit)	G13	B13
16384 (14 Bit)	G14	B14

Code type and division for rotary position sensor with analogue output
Interface and supply voltage, version 7 or 8
(4 ... 20 mA)

8192 (13 Bit)	G13

Absolute singleturn rotary position sensor shaft version
Preferred Type 5852

- Parallel interface
- Highest shock resistance on the market (>2500 m/s^2, 6 ms acc. to DIN IEC 68-2-27)
- Improved EMC characteristics
- Divisions: up to 2000 Gray-Excess or up to 16384 (14 bits) gray, singleturn
- Ø 58 mm shaft version
- IP65
- Count direction reversible
- Temperature and ageing compensation
- Short-circuit proof outputs
- Integrativ Technology®
  Patented new type of construction integrates all components; use of an opto-asic and 6-layer multilayer technology now on just a single PCB
- resolution up to 14 bits.

Mechanical characteristics:

Speed:	max. 12000 min^{-1}
Rotor moment of inertia:	appr. 1,8 x 10-6 kgm^2
Starting torque:	< 0.01 Nm
Radial load capacity of shaft*:	80 N
Axial load capacity of shaft:*:	40 N
Weight:	appr. 0.4 kg
Protection acc. to EN 60 529:	IP65
Working temperature:	-20° C ... +80 °C[1)]
Operating temperature:	-20° C ... +85 °C
Shaft:	stainless steel
Shock resistance acc. to DIN-IEC 68-2-27	2500 m/s^2, 6 ms
Vibration resistance acc. to DIN-IEC 68-2-6:	100 m/s2, 10...2000 Hz

1) 70 °C ati 14 bits version

Divisions and code types available at short notice

360 Gray-Excess
1000 Gray-Excess
1440 Gray-Excess
2000 Gray-Excess
1024 (10 Bit) Gray
4096 (12 Bit) Gray
8192 (13 Bit) Gray
16384 (14 Bit) Gray

Other divisions and code types on request.

Electrical characteristics:

Interface type:	Parallel	Parallel
Supply voltage (U_B):	5 VDC (± 5 %)	10 ... 30 VDC
Output driver:	CMOS-TTL	Push-pull
Current consumption type.:	40 mA	100 mA
(no load) max.:	75 mA	159 mA
Permissible load/channel:	max. +0.5/–2 mA	max. +/-10 mA
Word change frequency	40.000/s	40.000/s
Signal level high:	min.3.4 V	min. U_B – 2.8 V
Signal level low	max. 0.3 V	max. 1.8 V
Rise time t_r (without cable):	max. 0.2 µs	max.1 µs
Fall time t_f (without cable):	max. 0.2 µs	max. 1 µs
Short circuit proof outputs:[1)]:	yes	yes
Reverse connection protection at UB:	no	yes
Conforms to CE requirements acc. to EN 50082-2, EN 50081-2 and EN 55011 Class B		

1) When supply voltage correctly applied U_B

Reverse count direction:

(Only at output type 3 and up to 13 bits gray code available)

Normal operation:
Rising code values when shaft turning clockwise (cw). Falling code values when shaft turning counterclockwise (ccw)

Reverse operation:
Output MSB inverted (pin 16) instead of output MSB (pin 3) connected.
Falling code values when shaft turning clockwise (cw). Rising code values when shaft turning counterclockwise (ccw), top view of shaft.

Absolute singleturn rotary position sensor shaft version
Preferred Type 5852

Terminal assignment

Signal:	0V	$+U_B$	1	2	3	4	5	6	7	8	9	10	11	12	13	14/$\overline{1}$		⏚
Cable colour:	WH	BN	GN	YE	GY	PK	BU	RD	BK	VT	GY PK	RD BU	WH GN	BN GN	WH YE	YE BN		
Pin:	1	2	3	4	5	6	7	8	9	10	11	12	13	14	15	16	17	PH

- Signal: 1 =MSB; 2 = MSB-1; 3 = MSB-2 etc.
- $\overline{1}$: Only at output type 3 up to 13 bits. MSB to reverse the count direction
- PH: Plug housing
- Insulate unused outputs before initial start-up

Dimensions:

Clamping flange with shaft ø 10

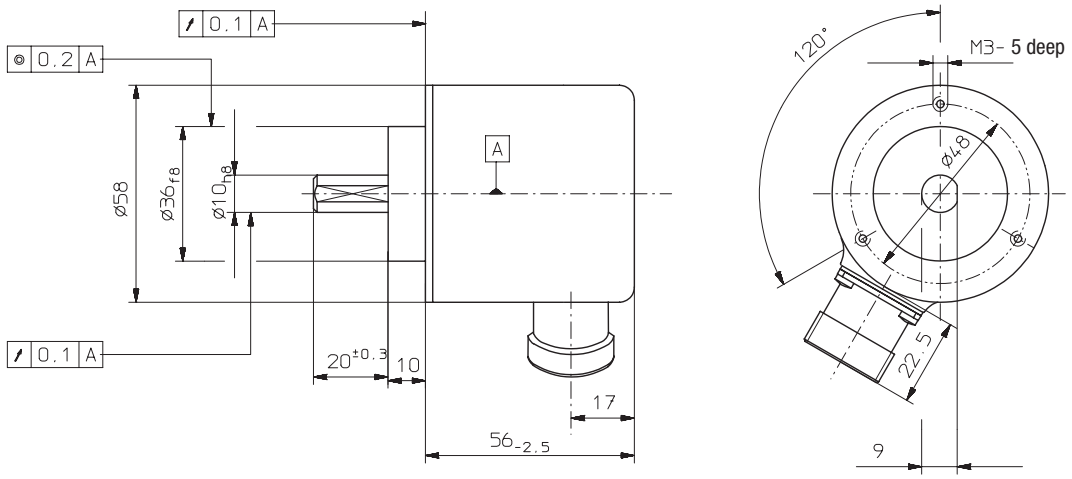

Synchronous flange with shaft ø 6 mm

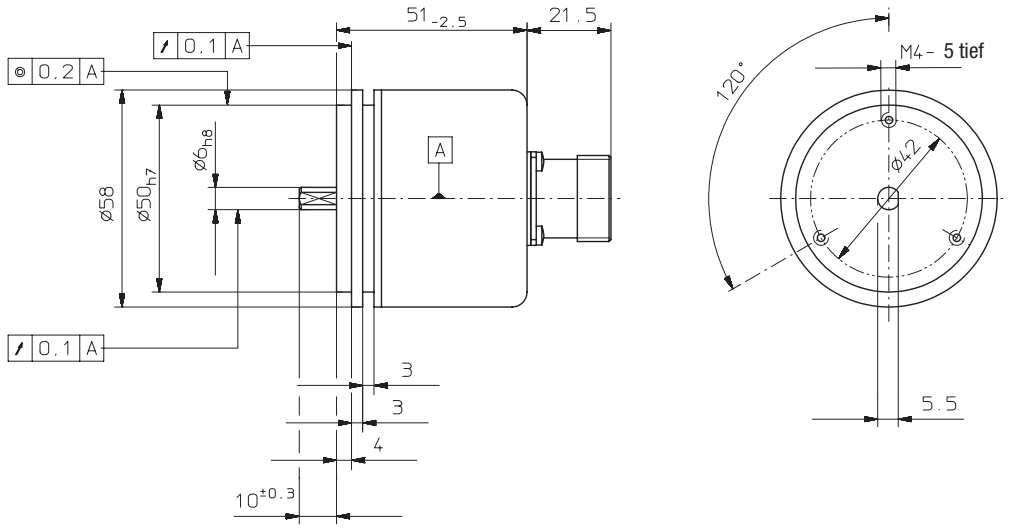

Mounting advice:

Do not connect rotary position sensor and drive rigidly to one another at shafts and flanges! Always use couplings to prevent shaft overload (see accessories chapter).

Absolute singleturn rotary position sensor shaft version
Preferred Type 5852

Top view of mating side, male contact base:

17 pin plug

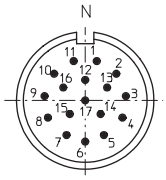

Order code: **T8.5852.XXXX.XXXX**

Range

Flange
- 12 = Clamping flange with shaft ø 10 x 20 mm
- 21 = Synchronous flange with shaft ø 6 x 10 mm

Interface and supply voltage
- 1 = Parallel (CMOS-TTL) with 5 V supply voltage
- 3 = Parallel with 10 ... 30 V supply voltage

Options
- 1 = no options
  Available options on request

Division and code type
- E03 = 360 Gray-Excess
- E01 = 1000 Gray-Excess
- E14 = 1440 Gray-Excess
- E20 = 2000 Gray-Excess
- G10 = 1024 (10 bits) Gray
- G12 = 4096 (12 bits) Gray
- G13 = 8192 (13 bits) Gray
- G14 = 16384 (14 bits) Gray

Type of connection
- 1 = axial cable (1 m PVC-cable)
- 2 = radial cable (1 m PVC-cable)
- 3 = axial plug without mating connector
- 5 = radial plug without mating connector

Accessories

Corresponding mating connector to connection type 3 and 5
Art.-no. T8.0000.5042.0000

Further accessories see accessories chapter

Absolute rotary position sensor hollow shaft version
Universal Type 5870

- SSI or parallel interface
- Highest shock resistance on the market (≥2500 m/s2, 6 ms acc. to DIN IEC 68-2-27)
- Divisions: up to 16384 (14 bits), singleturn
- Housing Ø 58 mm
- IP66
- Various options (e.g. LATCH, SET...)
- Gray, Binary or BCD code
- Temperature and ageing compensation
- Short-circuit proof outputs
- Integrativ Technology®
  Patented new type of construction integrates all components; use of an opto-asic and 6-layer multilayer technology now on just a single PCB
- resolution up to 14 bits.

Mechanical characteristics:

Speed without sealing:	max. 12000 min^{-1}
Speed with sealing[1]:	max. 6000 min^{-1}
Rotor moment of inertia:	appr. 6 x 10^{-6} kgm^2
Starting torque with sealing:	< 0,05 Nm
Weight:	appr. 0.4 kg
Protection acc. to EN 60 529 with sealing:	IP66
Working temperature without sealing:	-20° C ... +85 °C[2)3)]
Working temperature with sealing:	-20° C ... +80 °C[2)3)]
Operating temperature without sealing:	-20° C ... +90 °C[2)4)]
Operating temperature with sealing:	-20° C ... +85 °C[2)4)]
Shaft:	stainless steel
Shock resistance acc. to DIN-IEC 68-2-27	2500 m/s^2, 6 ms
Vibration resistance acc. to DIN-IEC 68-2-6:	100 m/s^2, 10...2000 Hz

[1)] for continuous operation max. 1500 min^{-1}
[2)] non-condensing
[3)] 70 °C with cable
[4)] 80 °C with cable

Divisions and code types available at short notice

Gray/Binär
250, 360[1)], 500, 720[1)], 900, 1000[1)], 1024 (10 Bit)[1)], 1250, 1440, 1800, 2000, 2500, 2880, 36001), 4000, 4096 (12 Bit)[1)], 5000, 7200, 8192 (13 Bit)[1)], 16384 (14 Bit)[1)]

BCD
250, 360[1)], 500, 720[1)], 900, 1000[1)], 1024 (10 Bit)[1)], 1250, 1440, 1800, 2000
Other pulse rates on request

Preferred divisions are bold
(reduced delivery time)

Electrical characteristics:

Interface type:	Synchronous-Serial (SSI)	Synchronous-Serial (SSI)	Parallel	Parallel
Supply voltage (U_B):	5 VDC (± 5 %)	10 ... 30 VDC	5 VDC (± 5 %)	10 ... 30 VDC
Output driver:	RS 485	RS 485	Push-pull	Push-pull
Current consumption typ.:	89 mA	89 mA	109 mA	109 mA
(no load) max.:	138 mA	138 mA	169 mA	169 mA
Permissible load/channel:	max. +/- 20 mA	max. +/- 20 mA	max. +/- 10 mA	max. +/- 10 mA
Word change frequency	max. 15.000/s	max. 15.000/s	40.000/s	40.000/s
SSI pulse rate min./max.:	100 kHz/500 kHz	100 kHz/500 kHz	-	-
Signal level high:	typ. 3.8 V	typ. 3.8 V	min. 3.4 V	min. U_B – 2.8 V
Signal level low (I_{Load} = 20 mA):	typ. 1.3 V	typ. 1.3 V	-	-
(I_{Load} = 10 mA):	-	-	max. 1.5 V	max. 1.8 V
(I_{Load} = 1 mA):	-	-	max. 0.3 V	-
Rise time tr (without cable):	max. 100 ns	max. 100 ns	max. 0.2 µs	max. 1 µs
Fall time tf (without cable):	max. 100 ns	max. 100 ns	max. 0.2 µs	max. 1 µs
Short circuit proof outputs:[1)]:	yes	yes[2)]	yes	yes
Reverse connection protection at U_B:	no	yes	no	yes
Conforms to CE requirements acc. to EN 50082-2, EN 50081-2 and EN 55011 Class B				

[1)] When supply voltage correctly applied U_B
[2)] Only one channel at a time: When U_B = 5 VDC, short-circuit to channel, 0 V or U_B is permitted.
When U_B = 10 ... 30 VDC short-circuit to channel or 0 V is permitted.

Control Inputs

Up/down input to switch the counting direction

As a standard, absolute rotary position sensors deliver increasing code values when the shaft rotates clockwise (cw), when looking from the shaft side. When the shaft rotates counter-clockwise (ccw), the output delivers accordingly decreasing code values.
As long as the Up/down input receives the corresponding signal (high), this feature is reversed. Clockwise rotation will deliver decreasing code values while counter-clockwise rotation will deliver increasing code values.

The response time is :	for 5 VDC supply voltage, 0.4 ms for 10 ... 30 VDC supply voltage, 2 ms.

SET input

This input is used to reset (to zero) the rotary position sensor. A control pulse (high) sent to this input allows storing the current position value as new zero position in the rotary position sensor.

Note :

before activating the SET input after supplying the rotary position sensor with the supply voltage, a counting direction (cw or ccw) must be defined univocally on the Up/down input!

Switching level of the control inputs:

Supply voltage	5 VDC	10 ... 30 VDC
low	≤1.7 V	≤ 4.5 V
high	≥3.4 V	≥8.7 V

The response time is :	for 5 VDC supply voltage, 0.4 ms for 10 ... 30 VDC supply voltage, 2 ms.

LATCH input

This input is used to „freeze“ the current position value. The position value will be statically available on the parallel output as long as this input will remain active (high).

The response time is :	for 5 VDC supply voltage, 140 µs, for 10 ... 30 VDC supply voltage, 200

Control Inputs

Up/down input to switch the counting direction

As a standard, absolute rotary position sensors deliver increasing code values when the shaft rotates clockwise (cw), when looking from the shaft side. When the shaft rotates counter-clockwise (ccw), the output delivers accordingly decreasing code values.
As long as the Up/down input receives the corresponding signal (high), this feature is reversed. Clockwise rotation will deliver decreasing code values while counter-clockwise rotation will deliver increasing code values.

The response time is :	for 5 VDC supply voltage, 0.4 ms for 10 ... 30 VDC supply voltage, 2 ms.

SET input

This input is used to reset (to zero) the rotary position sensor. A control pulse (high) sent to this input allows storing the current position value as new zero position in the rotary position sensor.

Note :

before activating the SET input after supplying the rotary position sensor with the supply voltage, a counting direction (cw or ccw) must be defined univocally on the Up/down input!

Switching level of the control inputs:

Supply voltage	5 VDC	10 ... 30 VDC
low	≤1.7 V	≤ 4.5 V
high	≥3.4 V	≥8.7 V

The response time is :	for 5 VDC supply voltage, 0.4 ms for 10 ... 30 VDC supply voltage, 2 ms.

LATCH input

This input is used to „freeze“ the current position value. The position value will be statically available on the parallel output as long as this input will remain active (high).

The response time is :	for 5 VDC supply voltage, 140 µs, for 10 ... 30 VDC supply voltage, 200

Absolute rotary position sensor hollow shaft version
Universal Type 5870

Terminal assignment (SSI interface with 12pin plug):

Signal:	0 V	$+U_B$	+T	-T	+D	-D	ST	VR					⏚
Cable colour:	WH	BN	GN	YE	GY	PK	BU	RD	BK	VT	GY PK	RD BU	
Pin:	1	2	3	4	5	6	7	8	9	10	11	12	PH

T: Clock signal
D: Data signal
ST: SET input. The current position value is stored as new zero position.
VR: Up/down input. As long as this input is active, decreasing code values are transmitted when shaft turning clockwise.
PH: Plug housing
Insulate unused outputs before initial start-up.

Terminal assignment (Parallel interface, 14 bits and max. 2 options, cable version):

Signal:	0V	$+U_B$	1	2	3	4	5	6	7	8	9	10	11	12	13	ST/ VR	VR/ LH		⏚
Cable colour:	WH	BN	GN	YE	GY	PK	BU	RD	BK	VT	GY PK	RD BU	WH GN	BN GN	WH YE	YE BN	WH GY		
Pin:	1	2	3	4	5	6	7	8	9	10	11	12	13	14	15	16	17		PH

Terminal assignment (Parallel interface, 13 bits and max. 2 options):

Signal:	0V	$+U_B$	1	2	3	4	5	6	7	8	9	10	11	12	13	ST/ VR	VR/ LH	14	⏚
Cable colour:	WH	BN	GN	YE	GY	PK	BU	RD	BK	VT	GY PK	RD BU	WH GN	BN GN	WH YE	YE BN	WH GY	GY BN	

Terminal assignment (Parallel interface, 14 bits, 1 option, 17 pin plug):

Signal:	0 V	$+U_B$	1	2	3	4	5	6	7	8	9	10	11	12	13	ST/ VR/ LH	14	⏚
Pin:	1	2	3	4	5	6	7	8	9	10	11	12	13	14	15	16	17	PH

Sig.: 1 =MSB; 2 = MSB-1; 3 = MSB-2 etc.
ST: SET input. The current position value is stored as new zero position.
VR: Up/down input. As long as this input is active, decreasing code values are transmitted when shaft turning clockwise.
LH: LATCH input. High active. The current position is „frozen". It is statically available at the parallel output.
PH: Plug housing

Insulate unused outputs before initial start-up.

Top view of mating side, male contact base:

12 pin plug

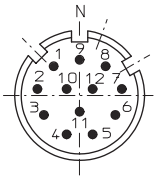

17 pin plug

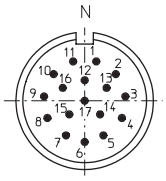

Absolute rotary position sensor hollow shaft version
Universal Type 5870

Dimensions:

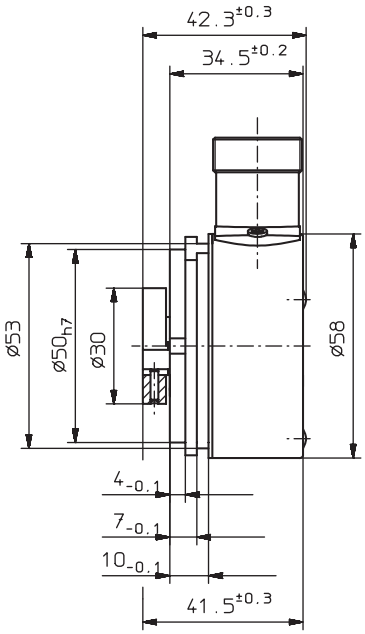

Flange type 1

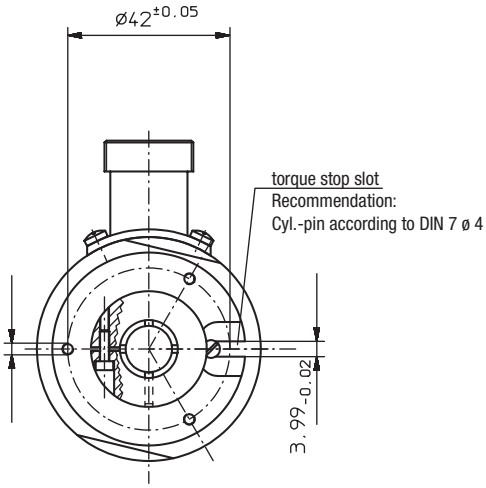

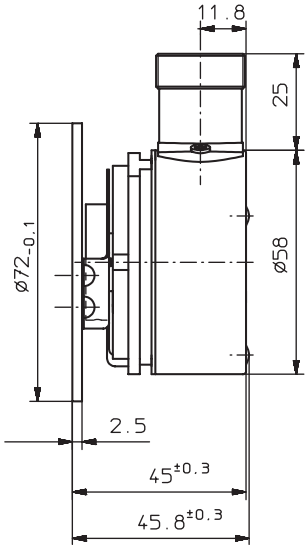

Flange type 3 with stator coupling

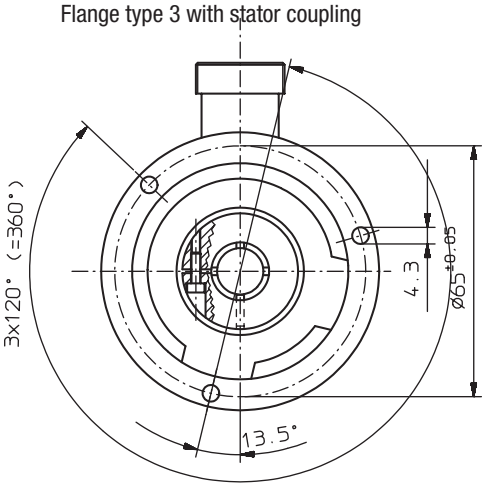

Cyl. pin acc. to DIN 7 ø 4

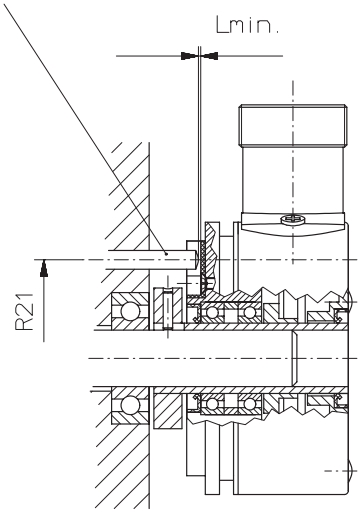

Mounting advice:

1) Do not connect rotary position sensor and drive rigidly to one another at shafts and flanges!

2) To mount a hollow shaft rotary position sensor, we recommend to use a torque stop pin that fits into the torque stop slot or a stator coupling.

3) When mounting the rotary position sensor ensure that Lmin. is larger than the axial play of the drive.

Max. permissible drive shaft impact:

(measuring error ≤ ±0,5 Bit)

	Mounting with stator coupling		Mounting with torque support
Divisions	permissible axial impact	permissible radial impact	permissible radial impact
up to 1024	±0.64 mm	±0.14 mm	±0.112 mm
up to 4096	±0.16 mm	±0.02 mm	±0.028 mm
up to 8192	±0.08 mm	±0.01 mm	±0.014 mm

Absolute rotary position sensor hollow shaft version
Universal Type 5870

Order code: **T8.5870.XXXX.XXXX**

Range

Flange
- 1 = Flange type 1 with through shaft
- 2 = Flange type 1with blind hole shaftt
- 3 = Flange type 3 mit stator coupling
- 4 = Flange type 2 with blind hole shaft

Hollow shaft
- 6 = ø 10 mm
- 8 = ø 12 mm

Interface and supply voltage
- 1 = SSI with 5 V supply voltage
- 2 = SSI with 10 ... 30 V supply voltage
- 3 = Parallel with 5 V supply voltage
- 4 = Parallel with 10 ... 30 V supply voltage

Options
- 2 = SET[1] and V/R
- 3[2] = SET and Latch[1]
- 4[2] = V/R[1] and Latch
- Alarm output on request

[1] with 14 bits parallel output and 17pin plug
[2] Not with SSI interface

Code type and division
- use corresponding table

Type of connection
- 1 = radial cable 1 m PVC-cable)
- 2 = radial plug without mating connector

Accessories:
Corresponding mating connector to connection type 2

- at SSI interface
  Art.No T8.0000.5012.0000
- at parallel interface
  Art.No T8.0000.5042.0000

Further accessories see rotary position sensor catalogue, accessories chapter

Code type and division with parllel output
Interface and supply voltage, version 3 or 4 (Parallel):

Division	Order code Gray/Gray-Excess	Order code Binary	Order code BCD
250	E02	B02	D02
360[1]	E03	B03	D03
500	E05	B05	D05
720[1]	E07	B07	D07
900	E09	B09	D09
1000[1]	E01	B01	D01
1024 (10 Bit)	G10	B10	D10
1250	E12	BA2	DA2
1440	E14	BA1	DA1
1800	E18	B18	D18
2000	E20	B20	D20
2500	E25	B25	
2880	E28	B28	
36001)	E36	B36	
4000	E40	B40	
4096 (12 Bit)	G12	B12	
5000	E50	B50	
7200	E72	B72	
8192 (13 Bit)	G13	B13	
16384 (14 Bit)	G14	B14	

Preferred divisions are bold

Code type and division for rotary position sensor with SSI-Output
Interface and supply voltage, version 1 or 2 (SSI):

Division	Order code Gray	Order code Binary
1024 (10 Bit)	G10	B10
4096 (12 Bit)	G12	B12
8192 (13 Bit)	G13	B13
16384 (14 Bit)	G14	B14

Absolute singleturn rotary position sensor hollow shaft version
Preferred Type 5872

- Parallel interface
- Highest shock resistance on the market (>2500 m/s^2, 6 ms acc. to DIN IEC 68-2-27)
- Improved EMC characteristics
- Very easy mounting. The rotary position sensor is mounted directly on the drive shaft without couplings. This saves up to 30 % cost and 60 % clearance compared to shaft versions
- Divisions: up to 2000 Gray-Excess or up to 16384 (14 bits) Gray, singleturn
- IP66
- Count direction reversible
- Temperature and ageing compensation
- Short-circuit proof outputs
- Integrativ Technology®
  Patented new type of construction integrates all components; use of an opto-asic and 6-layer multilayer technology now on just a single PCB
- resolution of up to 14 bits

Mechanical characteristics:

Speed without sealing:	max. 12000 min^{-1}
Speed with sealing[1]:	max. 6000 min^{-1}
Rotor moment of inertia:	appr. 6 x 10^{-6} kgm^2
Starting torque with sealing:	< 0.05 Nm
Weight:	appr. 0.4 kg
Protection acc. to EN 60 529 with sealing:	IP66
Working temperature without sealing:	-20 °C ... +85 °C[2][3]
Working temperature with sealing:	-20 °C ... +80 °C[2][3]
Operating temperature without sealing:	-20 °C ... +90 °C [2]
Operating temperature with sealing:	-20 °C ... +85 °C [2]
Shaft:	stainless steel
Shock resistance acc. to DIN-IEC 68-2-27	2500 m/s^2, 6 ms
Vibration resistance acc. to DIN-IEC 68-2-6:	100 m/s^2, 10...2000 Hz

[1] for continuous operation max. 1500 min^{-1}
[2] non-condensing
[3] 70 °C at 14 bits version

Divisions and code types available at short notice

360 Gray-Excess
1000 Gray-Excess
1440 Gray-Excess
2000 Gray-Excess
1024 (10 Bit) Gray
4096 (12 Bit) Gray
8192 (13 Bit) Gray
16384 (14 Bit) Gray

Other divisions and code types on request

Electrical characteristics::

Interface type:	Parallel	Parallel
Supply voltage (U_B):	5 VDC (± 5 %)	10 ... 30 VDC
Output driver:	CMOS-TTL	Push-pull
Current consumption type.:	40 mA	100 mA
(no load) max.:	75 mA	159 mA
Permissible load/channel:	max. +0.5 mA/–2.0 mA	max. +/-10 mA
Word change frequency	40.000/s	40.000/s
Signal level high:	min.3.4 V	min. U_B – 2.8 V
Signal level low	max. 0.3 V	max. 1.8 V
Rise time t_r (without cable):	max. 0.2 µs	max.1µs
Fall time t_f (without cable):	max. 0.2 µs	max. 1µs
Short circuit proof outputs:[1]:	yes	yes
Reverse connection protection at U_B:	no	yes
Conforms to CE requirements acc. to EN 50082-2, EN 50081-2 and EN 55011 Class B		

[1] When supply voltage correctly applied U_B

Reverse count direction:
(only at output type 3 and up to 13 bits available)

Normal operation:
Rising code values when shaft turning clockwise (cw). Falling code values when shaft turning counterclockwise (ccw)

Reverse operation:
Output MSB inverted (pin 16) instead of output MSB (pin 3) connected.
Falling code values when shaft turning clockwise (cw).
Rising code values when shaft turning counterclockwise (ccw), top view of shaft

Absolute singleturn rotary position sensor hollow shaft version
Preferred Type 5872

Terminal assignment

Signal:	0V	$+U_B$	1	2	3	4	5	6	7	8	9	10	11	12	13	14/$\overline{1}$		⏚
Colour:	WH	BN	GN	YE	GY	PK	BU	RD	BK	VT	GY PK	RD BU	WH GN	BN GN	WH YE	YE BN		
Pin:	1	2	3	4	5	6	7	8	9	10	11	12	13	14	15	16	17	PH

- Signal: 1 =MSB; 2 = MSB-1; 3 = MSB-2 etc.
- 1 : Only at output type 3 up to 13 bits. MSB to reverse the count direction
- PH: Plug housing
- Insulate unused outputs before initial start-up

Dimensions:

Flange type 1

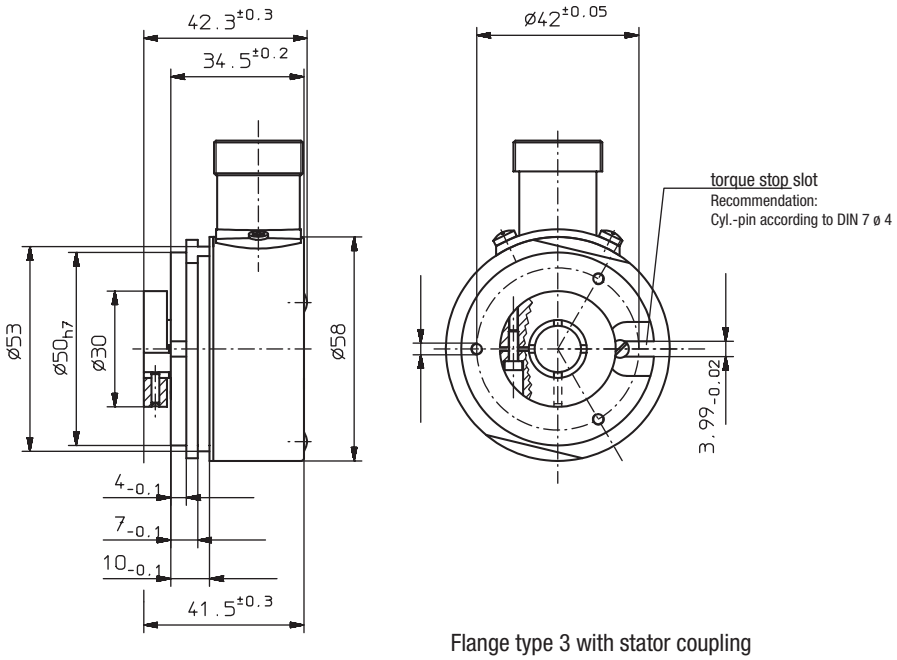

Flange type 3 with stator coupling

Cyl. pin acc. to DIN 7 ø 4

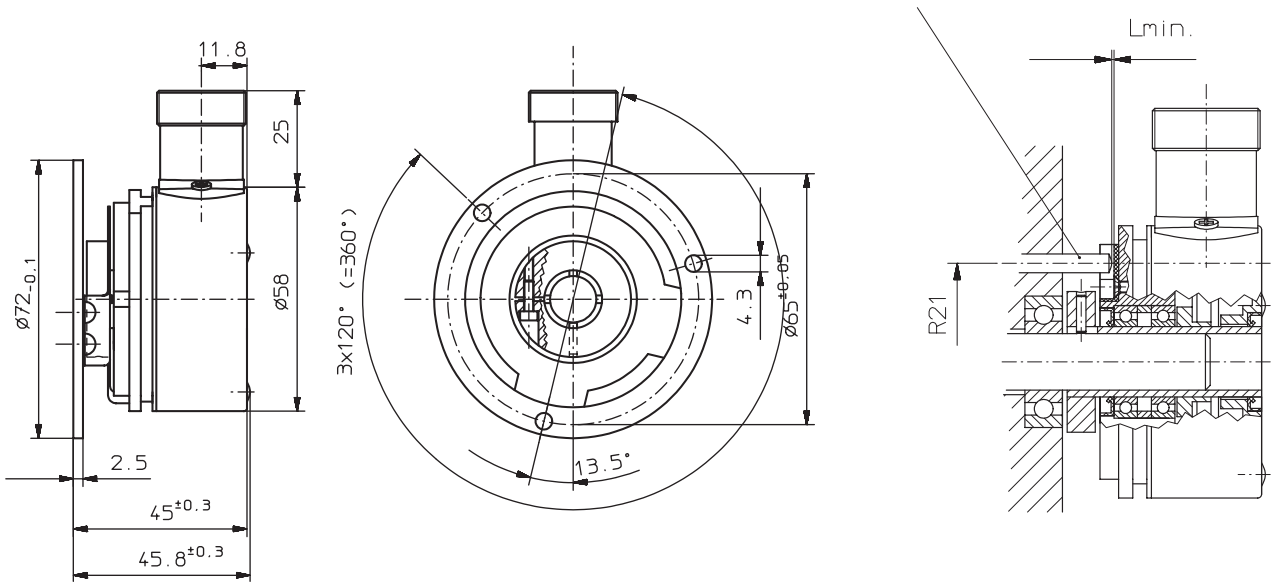

Mounting advice:

1) Do not connect rotary position sensor and drive rigidly to one another at shafts and flanges!

2) To mount a hollow shaft rotary position sensor, we recommend to use a torque stop pin that fits into the torque stop slot or a stator coupling.

3) When mounting the rotary position sensor ensure that Lmin. is larger than the axial play of the drive.

Absolute singleturn rotary position sensor hollow shaft version
Preferred Type 5872

Max. permissible drive shaft impact:

(measuring error ≤ ±0,5 Bit))

	Mounting with stator coupling		Mounting with torque support
Divisions	permissible axial impact	permissible radial impact	permissible radial impact
up to 1024 (10 bits)	±0.64 mm	±0.14 mm	±0.112 mm
up to 4096 (12 bits)	±0.16 mm	±0.02 mm	±0.028 mm
up to 8192 (13 bits)	±0.08 mm	±0.01 mm	±0.014 mm

Top view of mating side, male contact base:

17 pin plug

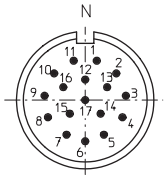

Order code: **T8.5872.XXXX.XXXX**

Range

Flange
- 1 = Flange type 1 with trough shaft
- 3 = Flange type 3 with stator coupling

Hollow shaft
- 6 = ø 10 mm
- 8 = ø 12 mm

Interface and supply voltage
- 1 = Parallel (CMOS-TTL) with 5 V supply voltage
- 3 = Parallel with 10 ... 30 V supply voltage

Options
- 1 = no options, available on request

Division and code type
- E03 = 360 Gray-Excess
- E01 = 1000 Gray-Excess
- E14 = 1440 Gray-Excess
- E20 = 2000 Gray-Excess
- G10 = 1024 (10 Bit) Gray
- G12 = 4096 (12 Bit) Gray
- G13 = 8192 (13 Bit) Gray
- G14 = 16384 (14 Bit) Gray

Type of connection
- 1 = radial cable (1 m PVC-cable)
- 2 = radial plug without mating connector

Accessories:

Corresponding mating connector to connection type 2
Art.No T8.0000.5042.0000

Further accessories see accessories chapter

Absolute multiturn rotary position sensor shaft version
Multiturn Type 5861

- Ø 58 mm
- IP66
- SSI or parallel interface
- Short-circuit proof outputs
- 4096 (12 bits) divisions, 4096 (12 bits) revolutions
- Gray or binary
- durably industry version
- mechanical multiturn gear

Mechanical characteristics:

Speed:	max. 10000 min^{-1}
Rotor moment of inertia:	appr. 14 x 10^{-6} kgm^2
Starting torque:	< 0.01 Nm
Radial load capacity of shaft:	60 N
Axial load capacity of shaft::	40 N
Weight:	appr. 0.35 kg
Protection acc. to EN 60 529:	IP65
Working temperature:	-20° C ... +60 °C
Operating temperature:	-20° C ... +65 °C
Shaft:	stainless steel
Shock resistance acc. to DIN-IEC 68-2-27	1000 m/s^2, 6 ms
Vibration resistance acc. to DIN-IEC 68-2-6:	100 m/s^2, 10...500 Hz

Divisions and code types available at short notice

12 / 12 bits Gray
12 / 12 bits Binary

Other divisions and code types on request

Elektrische Kennwerte:

Interface type:	Synchronous-Serial (SSI)	Parallel
Supply voltage (U_B):	10 ... 30 VDC	10 ... 30 VDC
Output driver:	RS 422	Push-pull
Power consumption (no load) max.:	66 mA	167 mA
Permissible load/channel:	max. +/-20 mA	max. +/-30 mA
Word change frequency	max. 10.000/s	10.000/s
SSI pulse rate min./max.:	100 kHz/400 kHz	–
Signal level high:	min. 2.5 V	min. U_B – 3 V
Signal level low (I_{Load} = 20 mA):	max. 0.5 V	max. 2 V
Rise time t_r(without cable):	max. 100 ns	max. 250 ns
Fall time t_f (without cable):	max. 100 ns	max. 250 ns
Short circuit proof outputs:[1]):	yes[2])	yes
Reverse connection protection at U_B:	yes	yes
Conforms to CE requirements acc. to EN 50082-2, EN 50081-2 and EN 55011 Class B		

[1]) When supply voltage correctly applied U_B

[2]) Only one channel at a time: (when U_B=10 ... 30 V short-circuit to channel or 0 V is permitted.)

Absolute multiturn rotary position sensor shaft version
Multiturn Type 5861

Terminal assignment (SSI-interface 24 bits with 12 pin plug or cable output):

Signal:	0V	+D	+T		Dir			+UB		-D	-T	S_0 1)	⏚
Pin:	1	2	3	4	5	6	7	8	9	10	11	12	PH
Col.:	BN	PK	YE		BU			WH		GY	GN	BK	

Terminal assignment (Parallel interface 24 bits with 37 pin Sub-D-plug or cable output):

Signal	Pin	Lol.
0 V	1	BU
S0 2)	2	BR
S2 2)	3	YE
S4 2)	4	PK
S6 2)	5	GY PK
S8 2)	6	WH GN
S10 2)	7	WH YE
M0 3)	8	WH GY
M2 3)	9	WH PK
Dir 4)	10	YE PK
---	11	---
Tristate 5)	12	YE BU

Signal	Pin	Lol.
10 ... 30 VDC	13	RD
M4 3)	14	WH BU
M6 3)	15	WH RD
M8 3)	16	WH BK
M10 3)	17	GY GN
Alarm 6)	18	PK GN
---	19	---
0 V	20	BK
S1 2)	21	GN
S3 2)	22	GY
S5 2)	23	VT
S7 2)	24	RD BU

Signal	Pin	Lol.
S9 2)	25	BN GN
S11 2)	26	YE BN
M1 3)	27	GY BN
M3 3)	28	PK BN
---	29	---
Latch 7)	30	GN BU
10 ... 30 VDC	31	WH
---	32	---
M5 3)	33	BN BU
M7 3)	34	BN RD
M9 3)	35	BN BK
M11 3)	36	YE GY
---	37	---

1) S0: 0 V Signal output

2) S0 ... S11: Data bits indicating the position within one revolution (S0 = LSB; S11 = MSB)

3) M0 .. M11: Data bits indicating the number of turns (M0 = LSB; M11 = MSB)

4) Dir: Programming input for count direction:
$+U_B$ or not connected = rising code values when shaft turning clockwise (cw)
0 V = falling code values when shaft turning clockwise (cw)

5) Tristate: Input to inactivate data outputs:
$+U_B$ or not connected = HIZ (high impedance) data outputs
0 V = data outputs activated

6) Alarm: Alarm output. Active if error occurs (NPN O.C. 10 mA)

7) Latch: Input for storing of position:
$+ U_B$ or not connected = position data permanently updated at output
0 V = position data are stored, stored value can be read out at output

- PH: Plug housing

Top view of mating side, male contact base:

12 pin plug

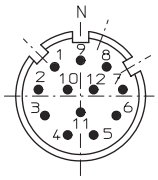

37 pin sub-D-plug

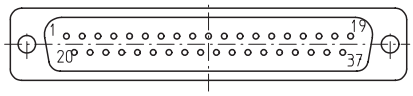

Absolute multiturn rotary position sensor shaft version
Multiturn Type 5861

Dimensions:

Clamping flange with shaft ø 10 mm and 12pin plug (SSI)

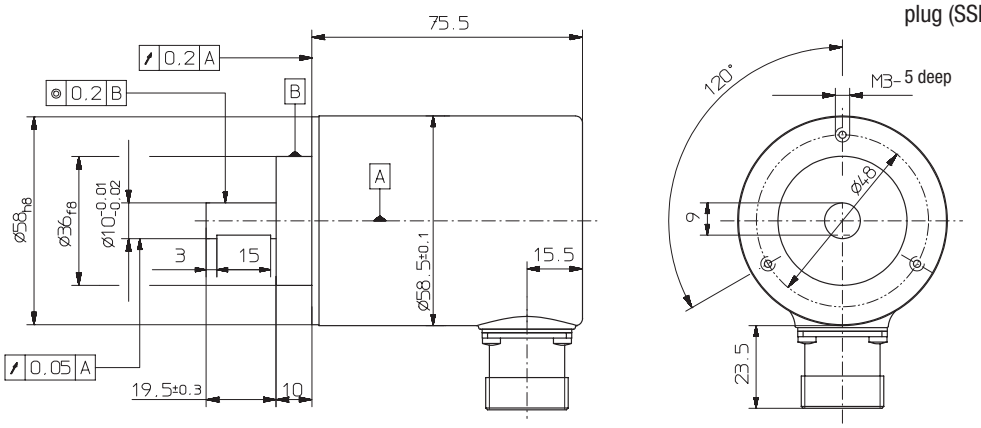

Clamping flange with shaft ø 10 mm and cable output (parallel)

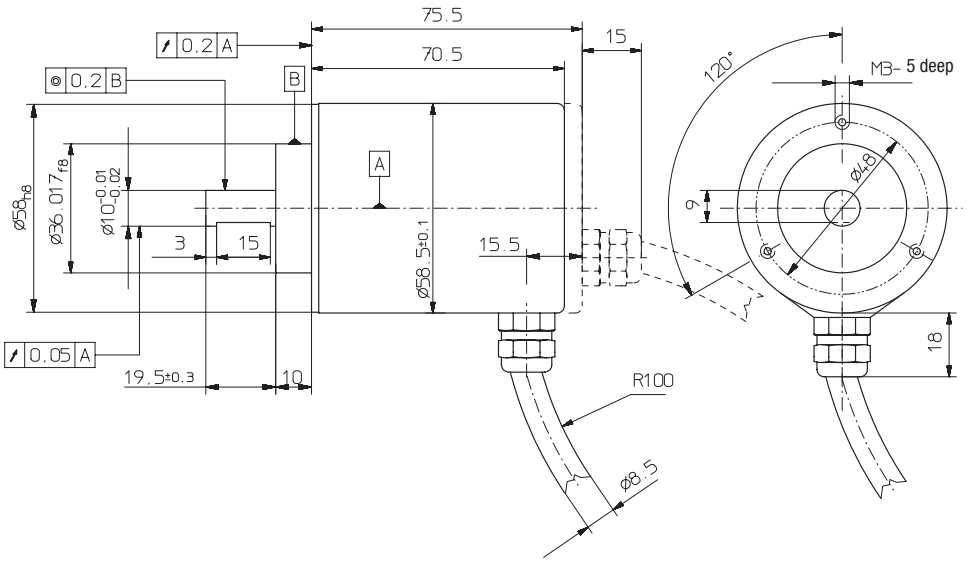

Clamping flange with shaft ø 6 mm and 12pin plug (SSI)

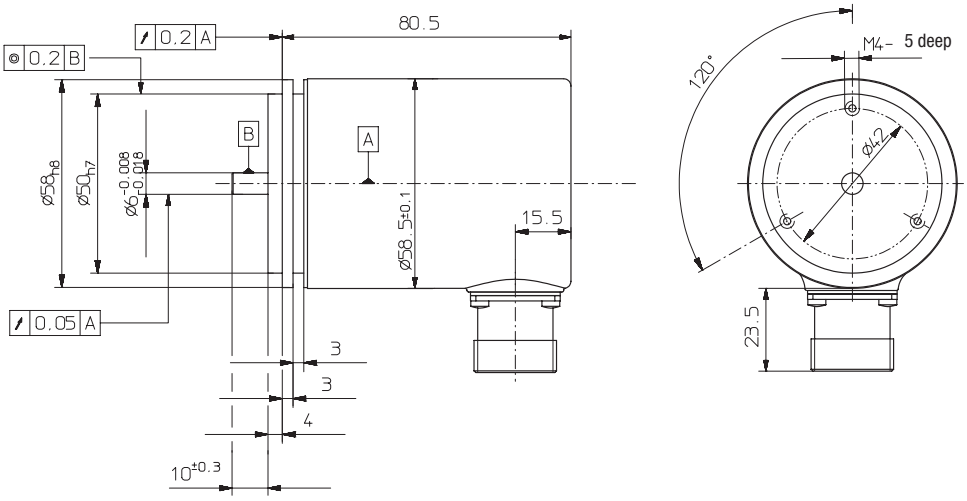

Absolute multiturn rotary position sensor shaft version
Multiturn Type 5861

Synchronous flange with shaft ø 6 mm

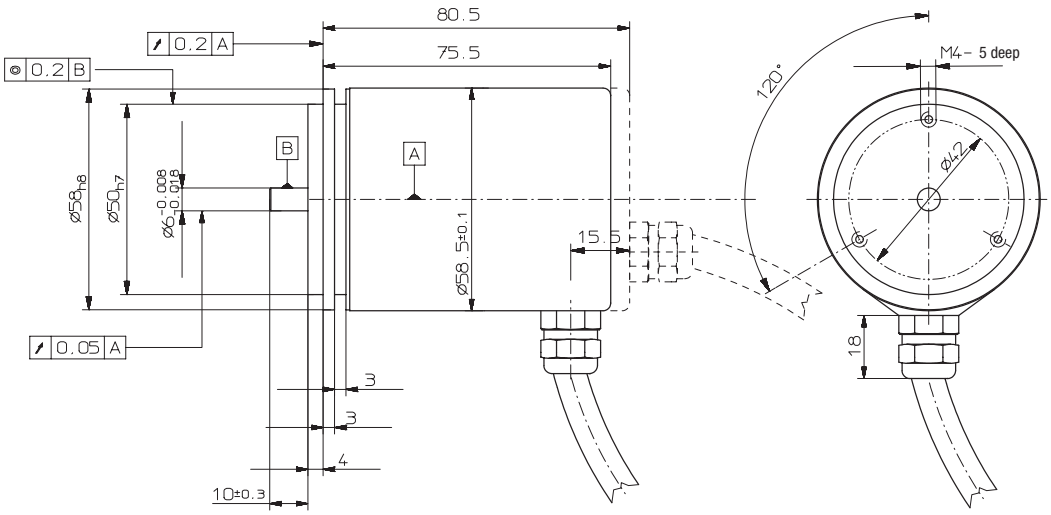

Order code: **T05.5861.XXXX.XXXX**

Range

Flange / Shaft
- 12 = Clamping flange with Shaft ø 10 mm
- 21 = Synchronous flange with Shaft ø 6 mm

Interface and supply voltage
- 2 = SSI with 10 ... 30 V supply voltage
- 3 = Parallel with 10 ... 30 V supply voltage

Options
- 1 = no options, available on request.

Division
- 22 = 24 Bit (4096 positions/rev.; 4096 revolution)

Type of code
- G = Gray
- B = Binary

Type of connection
- 5 = radial 12 pin plug
- 6 = radial cable (1.5 m)
- 7 = axial cable (1.5 m)
- 8 = 37 pin Sub-D plug with 0.1 m cable

Absolute multiturn rotary position sensor shaft version
Multiturn Type 5862 SSI, programmable

- Electronic multiturn gear with intelligent sensing technology (IST)
- Resolution: up to 8192 (13 bits) per revolution, 4096 (12 bits) revolutions
- Programmable parameters include*: code type, resolution per revolution, total resolution, direction of rotation (cw or ccw), zero point
- Only 66 mm clearance needed
- Housing ø 58 mm

*with optional programming kit see accesssories

- Shaft ø 6 or Ø 10 mm
- SSI interface, additional interfaces include RS 485 and OEM specific protocolls
- Protection IP65
- Shock resistant up to 250 g
- Contactless multiturn stage
- Four programmable outputs

Mechanical characteristics:

Speed:	max. 6 000 min^{-1}
Rotor moment of inertia:	appr. 1.8 x 10^{-6} kgm^2
Starting torque shaft version:	< 0,01 Nm
Radial load capacity of shaft:[2)]	80 N
Axial load capacity of shaft::[2)]	40 N
Weight:	appr. 0.4 kg
Protection acc. to EN 60 529:	IP65
Working temperature:	-20° C ... +70 °C
Operating temperature:	-20° C ... +80 °C
Shaft:	stainless steel
Shock resistance acc. to DIN-IEC 68-2-27	2500 m/s^2, 6 ms
Vibration resistance acc. to DIN-IEC 68-2-6:	100 m/s^2, 10 ... 2000 Hz

2) for shaft version only (at shaft end)

Electrical characteristics:

Interface type:	Synchronous-Serial (SSI)
Supply voltage (U_B):	5,0 ... 30 VDC[3)4)]
Output driver:	RS 485
Current consumption type.:	89 mA
(no load) max.:	138 mA
Permissible load/channel:	max. +/-20 mA
Update rate:	max. 1600/s
SSI pulse rate min./max.:	100 kHz/500 kHz
Signal level high:	type. 3.8 V
Signal level low (I_{Load} = 20 mA):	type. 1.3 V
Rise time t_r (without cable):	max. 100 ns
Fall time t_f (without cable):	max. 100 ns
Short circuit proof outputs:[1)]:	yes[2)]
Reverse connection protection at U_B:	yes
Conforms to CE requirements acc. to EN 50082-2, EN 50081-2 and EN 55011 Class B	
Performance against magnetic influence acc. to EN61000-4, 5	

1) when U_B supply voltage correctly applied U_B
2) Only one channel at a time: When UB = 5 VDC, short-circuit to output, 0 V and + U_B is permitted. When U_B < 5 VDC short-circuit to output and 0 V is permitted.
3) Optional status bit
4) Please note: the minimum voltage supply must be 5.0 VDC

Patended "Integrated Technology®" uses single board construction, deliberate assembly techniques, and two ASIC design:

- Shock up to 250gs
- Higher vibration specs and thermal shock performance
- Lower parts count, elimination of potentiometers
- Higher resistance to EMI

Electronic multiturn increases performance, eliminates gears

- Reliability - No backlash errors, resistant to EMI, lower parts count
- Higher life - No mechanical wear, lower internal temperature
- Higher performance - Higher operating speeds
- Lower profile - compact size, hollow shaft
- Economical - Lower cost

Patended "Intelligent Sensing Technology®"

- Multiturn design that protects rotary position sensor from EMI and increases battery life to10 years.
- The battery outlasts both application requirements and system components (LEDs & bearings)
- Redundant multiturn sensors and counters increase reliability & life
- Active system output monitoring using digital filters to compare data to logical & target bits.

Absolute multiturn rotary position sensor shaft version
Multiturn Type 5862 SSI, programmable

Control inputs:

Up/down input to switch counting direction

As a standard, absolute rotary position sensors deliver increasing code values when the shaft rotates clockwise (cw), when looking from the shaft side. When the shaft rotates counter-clockwise (ccw), the output deli-vers decreasing code values. If a corresponding signal (high) is applied to this input when switching on the power supply, this feature is reversed. Clockwise rotation will deliver decreasing code values while counter-clockwise rotation will deliver increasing code values. Response time: at 5-30 VDC supply voltage, 10 ms.

SET input

This input is used to reset (to zero) the rotary position sensor. A control pulse (high) sent to this input allows storing the current position value as new zero position in the rotary position sensor.

Note :

before activating the SET input after supplying the rotary position sensor with the supply voltage, a counting direction (cw or ccw) must be defined univocally on the Up/down input! Response time: at 5-30 VDC supply voltage, 10 ms.

Switching level of the control inputs:

low	max. 25% U_B
high	min. 60% U_B, max. U_B
Max. current input	≤0.5 mA

HW-Setting	SW-Setting	Function
cw	cw	cw
ccw	cw	ccw
cw	ccw	ccw
ccw	ccw	ccw

Encoder outputs

Output	Default-function:
A1:	battery control*
A2:	not activated*
A3:	not activated*
A4:	not activated*

*programmable with the optiona programming software

Electrical characteristics of the outputs:

Permissible load/channel:		±9.0 mA
Signal level		
	high:	min.U_B – 3.0 V
	low:	max. 1,5 V
Rise time:		max. 240 µs
Fall time:		max. 300 µs

The outputs are not activated in the factory setting (default). They can be activated and defined with theoptional programming software e.g. limit switch, overspeed and temperature control etc.

Programmable function with optional software

Programmable features with optional a programming tool:

- Type of code
- Resolutions per revolution
- Number of revolution
- Total resolution
- Direction of rotation
- Offset for mechanical zero point compensation etc....

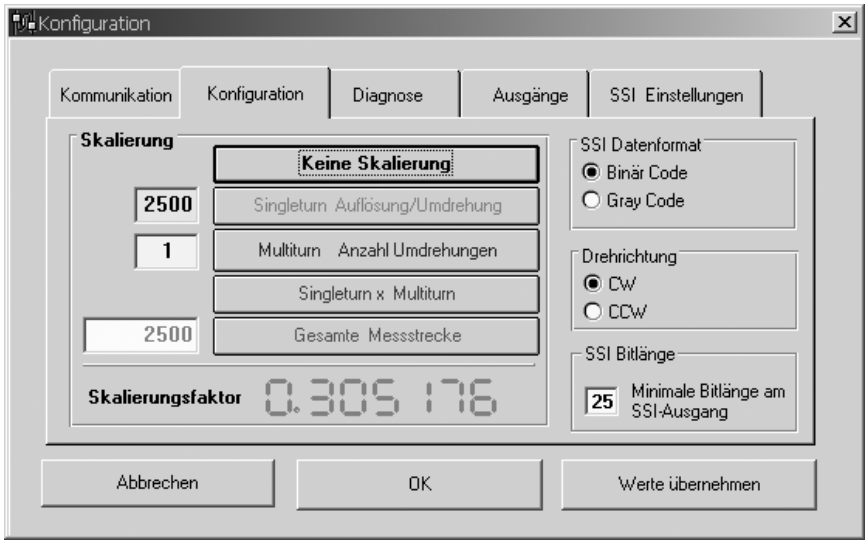

Absolute multiturn rotary position sensor shaft version
Multiturn Type 5862 SSI, programmable

Terminal assignment SSI Synchronous Serial interface with 12pin plug

Signal:	0V	$+U_B$	+T	–T	+D	–D	ST	VR	A1	A2	A3	A4	⏚
Pin:	1	2	3	4	5	6	7	8	9	10	11	12	PH
Col.:	WH	BN	GN	YE	GY	PK	BL	RD	BL	VT	GY PK	RD BL	

T: Clock signal
D: Data signal
ST: SET input. The current position value is stored as new zero position (or the actual value is set to the preset value when using the programmable version).
VR: Up/down input. As long as this input is active, decreasing code values are transmitted when shaft turning clockwise.
PH: Plug housing
Insulate unused outputs before initial start-up

A1, A2, A3, A4: outputs, with software programmable

Terminal assignment RS 485 and 12pin plug

Signal:	0V	$+U_B$	–R/T	+R/T				VR					⏚
Pin:	1	2	3	4	5	6	7*	8	9	10	11	12	PH
Col.:	WH	BN	YE	YE				RD					

R = Receive-channel
T = Transmit-channel
VR: Up/down input. As long as this input (High-Level = + U_B)is active, decreasing code values are transmitted when shaft turning clockwise.
PH = Plug housing

* There is no set input for 3001 version, but it can be realised also with command “<ESC> G” (write preset).

Dimensions:

Clamping flange

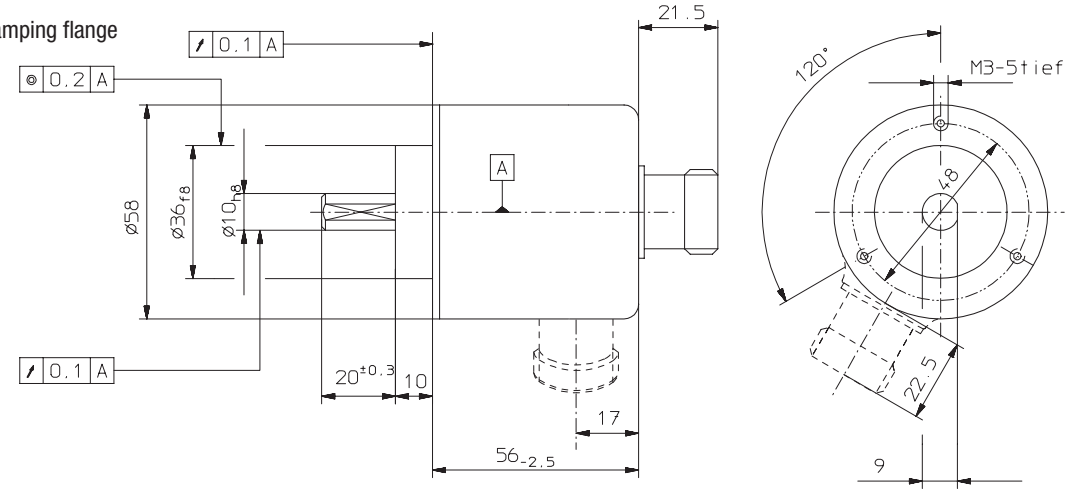

Synchronous flange

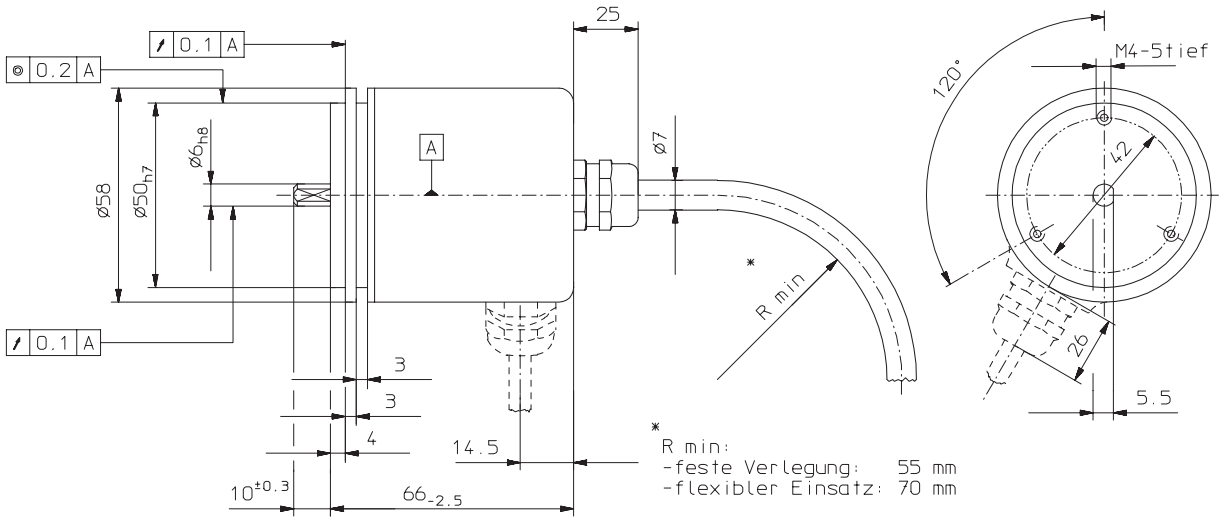

Absolute multiturn rotary position sensor shaft version
Multiturn Type 5862 SSI, programmable

Top view of mating side

12 pin plug

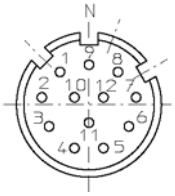

Order code: **T8.5862.XXXX.XXXX**

Range

Flange
- 1 = Clamping flange
- 2 = Synchronous flange

Shaft (ø x L)
- 1 = ø 6 mm x 10 mm
- 2 = ø 10 mm x 20 mm

Interface
- 2 = SSI 5 ... 30 VDC
- 3 = RS 485, halfduplex 5 ... 30 VDC

Type of connection
- 1 = Axial cable (1 m PVC-cable)
- 2 = Radial cable (1 m PVC-cable)
- 3 = Axial 12 pin plug
- 4 = Radial 12 pin plug
- 5 = Axial cable (2 m PVC-cable)
- 6 = Radial cable (2 m PVC-cable)
- 7 = Axial cable (3 m PVC-cable)
- 8 = Radial cable (3 m PVC-cable)
- 9 = Axial cable (5 m PVC-cable)
- A = Radial cable (5 m PVC-cable)
- B = Axial cable (8 m PVC-cable)
- C = Radial cable (8 m PVC-cable)
- D = Axial cable (10 m PVC-cable)
- E = Radial cable (10 m PVC-cable)
- F = Axial cable (15 m PVC-cable)
- G = Radial cable (15 m PVC-cable)

SSI-Interface*
- 2001 = 4096 x 4096 (24-Bit), Binary
- 2002 = 8192 x 4096 (25-Bit), Binary
- 2003 = 4096 x 4096 (24-Bit), Gray
- 2004 = 8192 x 4096 (25-Bit), Gray

RS 485-Interface, halfduplex
- 3001 = ESC protocol, max. 38400 baud

*This factory set (default) resolution can be re-programmed by using software.

Accessories:

Corresponding mating connector to connection type 3 +4
Order code T8.0000.5012.0000

Programming kit includes
- Interface converter
- Connection cable with the interface converter rotary position sensor – PC
- 90-250 V AC power supply
- CD-ROM with software

Order code T8.0010.9000.0004

Further accessories see rotary position sensor catalogue, accessories chapter

Absolute multiturn rotary position sensor hollow shaft version
Multiturn Type 5882 SSI, programmable

- Most compact multiturn rotary position sensor with hollow shaft on the market
- Only 40.5 mm clearance needed, thus lower profile than incremental rotary position sensors.
- Programming parameters include*: code type, resolution per revolution, total resolution, direction of rotation (cw or ccw), zero point.
- Very easy mounting of the hollow shaft version. The rotary position sensor is mounted directly on the drive shaft without coupling.
- Divisions: up to 8192 (13 bits) per revolution, 4096 (12 bits) revolutions
- SSI interface, additional interfaces include RS 485 and OEM specific protocolls
- Multiturn gear with patended intelligent sensing technology (**I-S-T**)
- Hollow shaft up to Ø 12 mm
- Housing Ø 58 mm
- Protection: IP65
- Shock resistant up to 250 g.

*with optional programming kit see accesssories

Mechanical characteristics:

Speed:[1]	max. 6 000 min^{-1}
Rotor moment of inertia:	appr. 6 x 10^{-6} kgm^2
Starting torque hollow shaft version:	< 0.05 Nm
Weight:	appr. 0.5 kg
Protection acc. to EN 60 529:	IP65
Working temperature: [2]	-20° C ... +70 °C
Operating temperature:	-20° C ... +80 °C
Shaft:	stainless steel
Shock resistance acc. to DIN-IEC 68-2-27	2500 m/s^2, 6 ms
Vibration resistance acc. to DIN-IEC 68-2-6:	100 m/s^2, 10 ... 2000 Hz

1) for continuous operation 3000 min^{-1}
2) non-condensing

Electrical characteristics:

Interface type:	Synchronous-Serial (SSI)
Supply voltage (U_B):	5,0 ... 30 VDC[3][4]
Output driver:	RS 485
Current consumption type.:	89 mA
(no load) max.:	138 mA
Permissible load/channel:	max. +/-20 mA
Aktualisierungsrate	max. 1600/s
SSI pulse rate min./max.:	100 kHz/500 kHz
Signal level high:	type. 3.8 V
Signal level low (I_{Load} = 20 mA):	type. 1.3 V
Rise time t_r (without cable):	max. 100 ns
Fall time t_f (without cable):	max. 100 ns
Short circuit proof outputs:[1]:	yes[2]
Reverse connection protection at U_B:	yes
Conforms to CE requirements acc. to EN 50082-2, EN 50081-2, EN 55011 Class B and EN 61000-4-8	
Performance against magnetic influence acc. to EN61000-4, 5	

1) When U_B supply voltage correctly applied U_B
2) Only one channel at a time: When U_B = 5 VDC, short-circuit to output, 0 V and + U_B is permitted. When U_B = 10 ... 30 VDC short-circuit to output and 0 V is permitted.
4) Please note: the minimum voltage supply must be 5.0 VDC.

Patended "Integrated Technology®" uses single board construction, deliberate assembly techniques, and two ASIC design:
- Shock up to 250gs
- Higher vibration specs and thermal shock performance
- Lower parts count, elimination of potentiometers
- Higher resistance to EMI

Electronic multiturn increases performance, eliminates gears
- Reliability - No backlash errors, resistant to EMI, lower parts count
- Higher life - No mechanical wear, lower internal temperature
- Higher performance - Higher operating speeds
- Lower profile - compact size, hollow shaft
- Economical - Lower cost

Patended "Intelligent Sensing Technology®"
- Multiturn design that protects rotary position sensor from EMI and increases battery life to10 years.
- The battery outlasts both application requirements and system components (LEDs & bearings)
- Redundant multiturn sensors and counters increase reliability & life
- Active system output monitoring using digital filters to compare data to logical & target bits.

Absolute multiturn rotary position sensor hollow shaft
Multiturn Type 5882 SSI, programmable

Control inputs:

Up/down input to switch counting direction

As a standard, absolute rotary position sensors deliver increasing code values when the shaft rotates clockwise (cw), when looking from the shaft side. When the shaft rotates counter-clockwise (ccw), the output deli-vers decreasing code values. If a corresponding signal (high) is applied to this input when switching on the power supply, this feature is reversed. Clockwise rotation will deliver decreasing code values while counter-clockwise rotation will deliver increasing code values. Response time: at 5-30 VDC supply voltage, 10 ms.

SET input

This input is used to reset (to zero) the rotary position sensor. A control pulse (high) sent to this input allows storing the current position value as new zero position in the rotary position sensor.

Note :

before activating the SET input after supplying the rotary position sensor with the supply voltage, a counting direction (cw or ccw) must be defined univocally on the Up/down input! Response time: at 5-30 VDC supply voltage, 10 ms.

Switching level of the control inputs:

low	max. 25% U_B
high	min. 60% U_B, max. U_B
Max. current input	
	≤0.5 mA

HW-Setting	SW-Setting	Function
cw	cw	cw
ccw	cw	ccw
cw	ccw	ccw
ccw	ccw	ccw

Encoder outputs

Output	Default-function:
A1:	battery control*
A2:	not activated*
A3:	not activated*
A4:	not activated*

*programmable with the optiona programming software

Elektrische Kennwerte der Ausgänge:

Permissible load/channel:		±9,0 mA
Signal level		
	high:	min.U_B – 3.0 V
	low:	max. 1.5 V
Rise time:		max. 240 µs
Fall time:		max. 300 µs

The outputs are not activated in the factory setting (default). They can be activated and defined with theoptional programming software e.g. limit switch, overspeed and temperature control etc.

Programmable function with optional software

Programmable features with optional a programming tool:

- Type of code
- Resolutions per revolution
- Number of revolution
- Total resolution
- Direction of rotation
- Offset for mechanical zero point compensation etc.

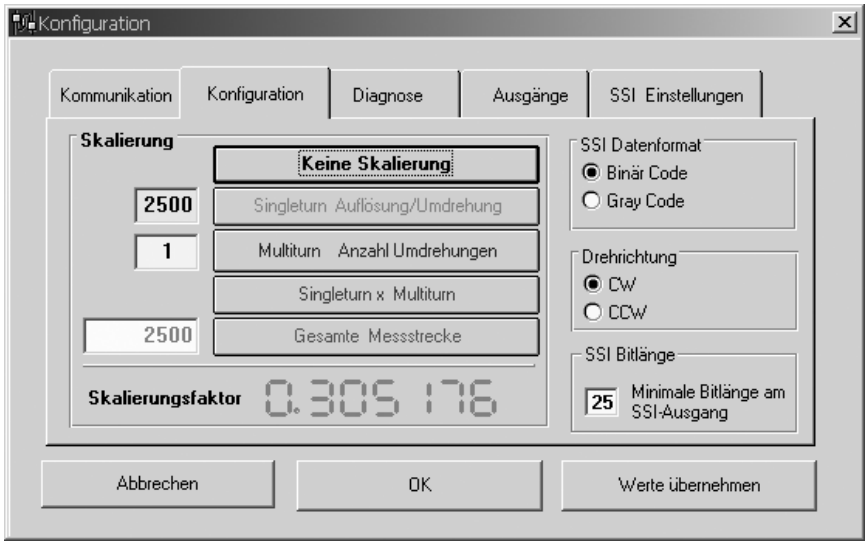

Absolute multiturn rotary position sensor hollow shaft
Multiturn Type 5882 SSI, programmable

Terminal assignment SSI Synchronous Serial interface with 12pin plug

Signal:	0V	$+U_B$	+T	–T	+D	–D	ST	VR	A1	A2	A3	A4	⏚
Pin:	1	2	3	4	5	6	7	8	9	10	11	12	PH
Colour:	WH	BN	GN	YE	GY	PK	BU	RD	BK	VT	GY PK	RD BL	

T: Clock signal
D: Data signal
ST: SET input. The current position value is stored as new zero position (or the actual value is set to the preset value when using the programmable version).

VR: Up/down input. As long as this input is active, decreasing code values are transmitted when shaft turning clockwise.

PH: Plug housing
Insulate unused outputs before initial start-up
A1, A2, A3, A4: outputs, with the software programmable

Terminal assignment RS 485 and 12pin plug

Signal:	0V	$+U_B$	–R/T	+R/T				VR					⏚
Pin:	1	2	3	4	5	6	7*	8	9	10	11	12	PH
Colour:	WH	BN	YE	GN				RD					

R = Receive-channel
T = Transmit-channel

VR: Up/down input. As long as this input (High-Level = + U_B) is active, decreasing code values are transmitted when shaft turning clockwise.
PH = Plug housing

* There is no set input for P3001 version, but it can be realised also with command "<ESC> G" (write preset).

Dimensions:

Plug version

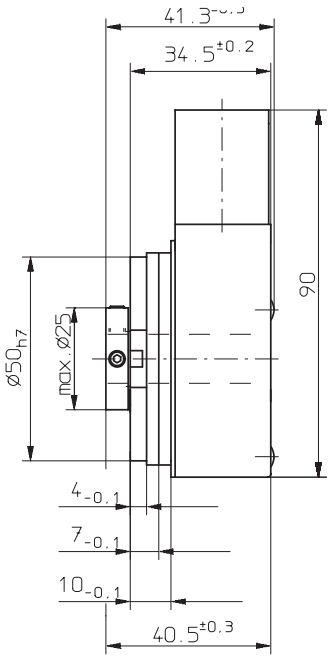

Flange type 1

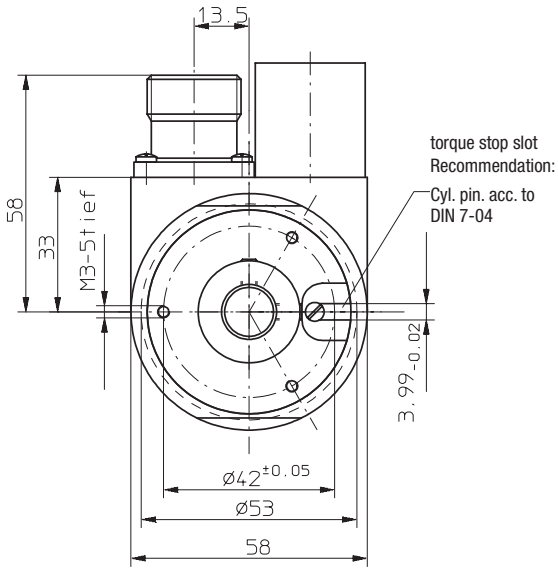

Flange type 3 with stator coupling

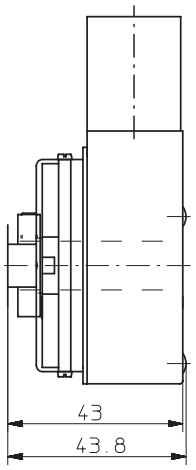

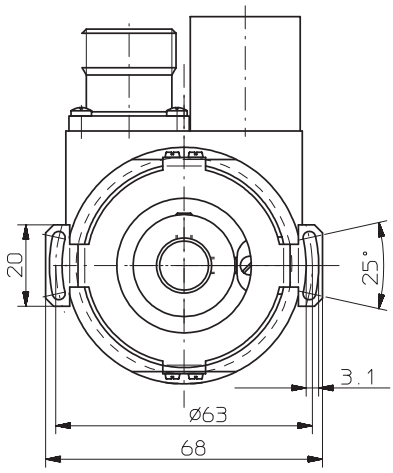

Absolute multiturn rotary position sensor hollow shaft
Multiturn Type 5882 SSI, programmable

Dimensions:
Cable version

Flange type 1

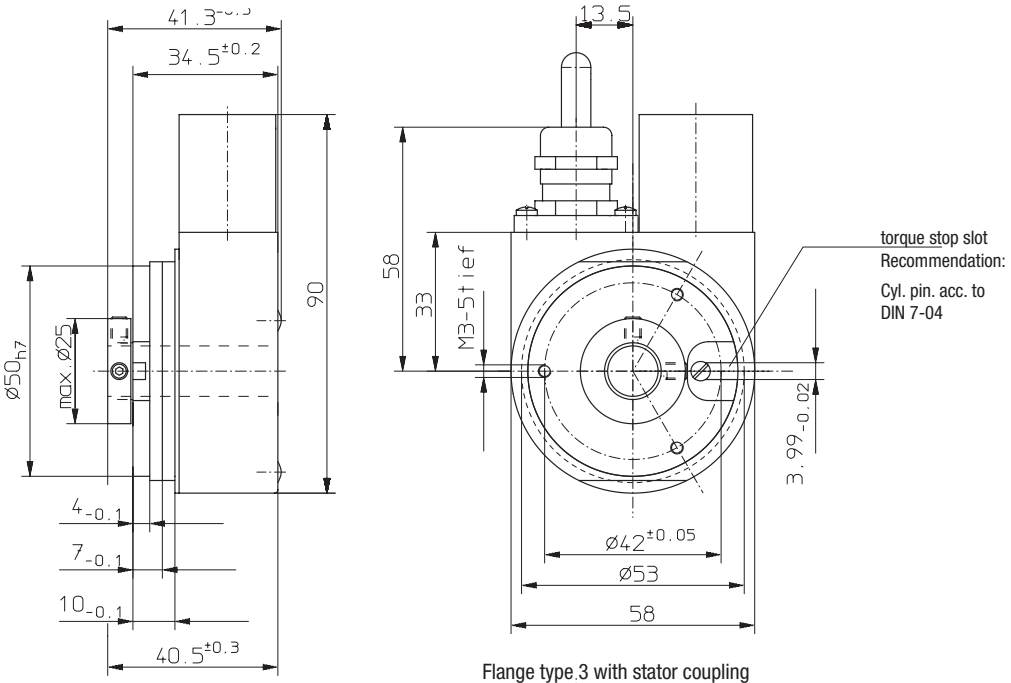

Flange type 3 with stator coupling

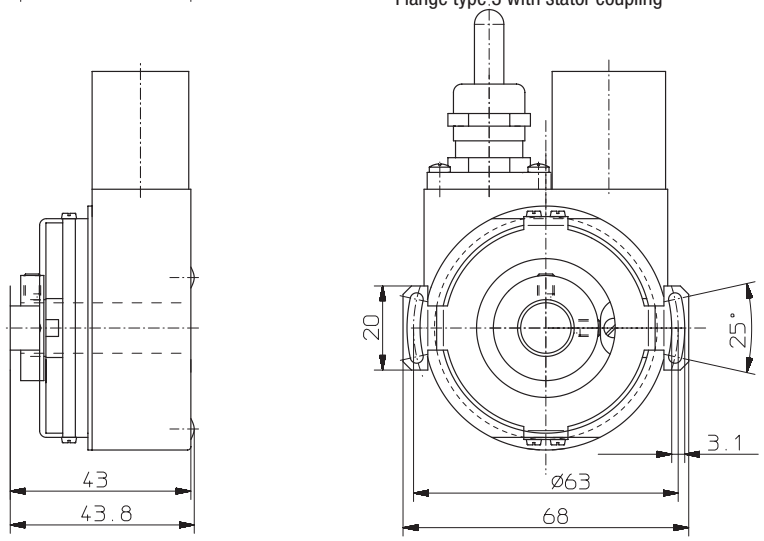

Absolute multiturn rotary position sensor hollow shaft
Multiturn Type 5882 SSI, programmable

Max. permissible drive shaft impact:
(measuring error ≤ ±0.5 bit)

	Mounting with stator coupling		Mounting with torque support
Pulses:	Permissible axial impact	Permissible radial impact	Permissible radial impact
up to 1024 (10 Bit)	±0.64 mm	±0.14 mm	±0.112 mm
up to 4096 (12 Bit)	±0.16 mm	±0.02 mm	±0.028 mm
up to 8192 (13 Bit)	±0.08 mm	±0.01 mm	±0.014 mm

Top view of mating side, male contact base:
12 pin plug

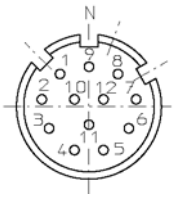

Order code:

T8.5882.XXXX.XXXX

Range

Flange
- 1 = Flange type 1 with through shaft and torque support slot
- 3 = Flange type 3 with through shaft and stator coupling*

*Shaft clamping on other side on request

Hollow shaft
- 6 = Hollow shaft ø 10 mm
- 8 = Hollow shaft ø 12 mm

Interface
- 2 = SSI 5 ... 30 VDC
- 3 = RS 485, halfduplex 5 ... 30 VDC

Type of connection
- 1 = Radial cable (1 m PVC-cable)
- 2 = 12 pin plug radial
- 3 = Radial cable (2 m PVC-Cable)
- 4 = Radial cable (3 m PVC-Cable)
- 5 = Radial cable (5 m PVC-Cable)
- 6 = Radial cable (8 m PVC-Cable)
- 7 = Radial cable (10 m PVC-Cable)
- 8 = Radial cable (15 m PVC-Cable)

SSI-Interface *
- 2001 = 4096 x 4096 (24-Bit), Binary
- 2002 = 8192 x 4096 (25-Bit), Binary
- 2003 = 4096 x 4096 (24-Bit), Gray
- 2004 = 8192 x 4096 (25-Bit), Gray

RS 485-Interface halfduplex
- 3001 = ESC protocol, max. 38400 Baud

*This factory set (default) resolution can be re-programmed by using the software.

Accessories:

Corresponding mating connector to connection type 3 +4
Order code T8.0000.5012.0000

Programming kit includes
- Interface converter
- Connection cable with the interface converter rotary position sensor – PC
- 90-250 V AC power supply
- CD-ROM with software

Order code T8.0010.9000.0004

Further accessories see rotary position sensor catalogue, accessories chapter

Absolute multiturn rotary position sensor shaft or hollow shaft version
Multiturn Type 9081 SSI, programmable

- Electronic multiturn gear with patended intelligent sensing technology (IST)
- Hollow shaft up to ø 28 mm or shaft ø12 mm
- Shock resistant up to 250 g
- Only 50 mm clearance needed
- Programming parameters include*: code type, resolution per revolution, total resolution, direction of rotation (cw or ccw), zero point.
- Very easy mounting of the hollow shaft version.

*with optional programming kit see accesssories

The rotary position sensor is mounted directly on the drive shaft without couplings. This saves up to 30 % cost and 50 % clearance compared to shaft versions.

- Divisons: 8192 (13 bits) per revolution, 4096 (12 bits) revolutions
- SSI interface, additional interfaces include RS 485 and OEM specific protocolls
- IP65
- design in integrated technology
- Four programmable outputs

Mechanical characteristics:

Speed: 1)	max. 6000 min^{-1}
Rotor moment of inertia:	appr. 65 x 10^{-6} kgm^2
Starting torque hollow shaft version:	< 0.2 Nm
Starting torque shaft version:	< 0.05 Nm
Radial load capacity of shaft (hollow shaft):2)	80 N
Axial load capacity of shaft: (shaft):2)	40 N
Weight:	appr. 0,7 kg
Protection acc. to EN 60 529:	IP65
Working temperature:	-20° C ... +70 °C
Operating temperature:	-20° C ... +80 °C
Shaft:	stainless steel
Shock resistance acc. to DIN-IEC 68-2-27	2500 m/s^2, 6 ms
Vibration resistance acc. to DIN-IEC 68-2-6: 100 m/s^2, 10 ... 2000 Hz	

1) for continuous operation 3000 min^{-1}
2) at shaft version only (at shaft end)

Electrical characteristics:

Interface type:	Synchronous-Serial (SSI)3)
Supply voltage (U_B):	5.0 ... 30 VDC4)
Output driver:	RS 485
Current consumption type:	89 mA
(no load) max.:	138 mA
Permissible load/channel:	max. +/-20 mA
SSI pulse rate min./max.:	100 kHz/500 kHz
Signal level high:	type. 3.8 V
Signal level low (I_{Load} = 20 mA):	type. 1.3 V
Rise time t_r (without cable):	max. 100 ns
Fall time t_f (without cable):	max. 100 ns
Short circuit proof outputs:1):	yes2)
Reverse connection protection at U_B:	yes
Conforms to CE requirements acc. to EN 50082-2, EN 50081-2, EN 55011 Class B EN 61000-4-8	
Performance against magnetic influence acc. to EN61000-4.5	

1) When supply voltage correctly applied
2) Only one channel at a time:
(when U_B= 5 V, short-circuit to channel, 0 V, or +U_B is permitted.)
(when U_B > 5 V short-circuit to channel or 0 V is permitted.)
3) Optional status bit
4) Please note: the minimum voltage supply must be 5.0 VDC

Absolute multiturn rotary position sensor shaft or hollow shaft version
Multiturn Type 9081 SSI, programmable

Control inputs:

Up/down input to switch counting direction

As a standard, absolute rotary position sensors deliver increasing code values when the shaft rotates clockwise (cw), when looking from the shaft side. When the shaft rotates counter-clockwise (ccw), the output deli-vers decreasing code values. If a corresponding signal (high) is applied to this input when switching on the power supply, this feature is reversed. Clockwise rotation will deliver decreasing code values while counter-clockwise rotation will deliver increasing code values. Response time: at 5-30 VDC supply voltage, 10 ms.

SET input

This input is used to reset (to zero) the rotary position sensor. A control pulse (high) sent to this input allows storing the current position value as new zero position in the rotary position sensor.

Note :

before activating the SET input after supplying the rotary position sensor with the supply voltage, a counting direction (cw or ccw) must be defined univocally on the Up/down input! Response time: at 5-30 VDC supply voltage, 10 ms.

Switching level of the control inputs:

low	max. 25% U_B
high	min. 60% U_B, max. U_B
Max. current input	
	≤0.5 mA

HW-Setting	SW-Setting	Function
cw	cw	cw
ccw	cw	ccw
cw	ccw	ccw
ccw	ccw	ccw

Outputs

Output	Default-function:
A1:	battery control*
A2:	not activated*
A3:	not activated*
A4:	not activated*

*über Programmier-Software veränderbar

Permissible		
load/channel:		±9.0 mA
Signal level		
	high:	min.U_B – 3,0 V
	low:	max. 1.5 V
Rise time:		max. 240 µs
Fall time:		max. 300 µs

The outputs are not activated in the factory setting (default). They can be activated and defined with theoptional programming software e.g. limit switch, overspeed and temperature control etc.

Programmable function with optional software

Programmable features with optional a programming tool:

- Type of code
- Resolutions per revolution
- Number of revolution
- Total resolution
- Direction of rotation
- Offset for mechanical zero point compensation etc....

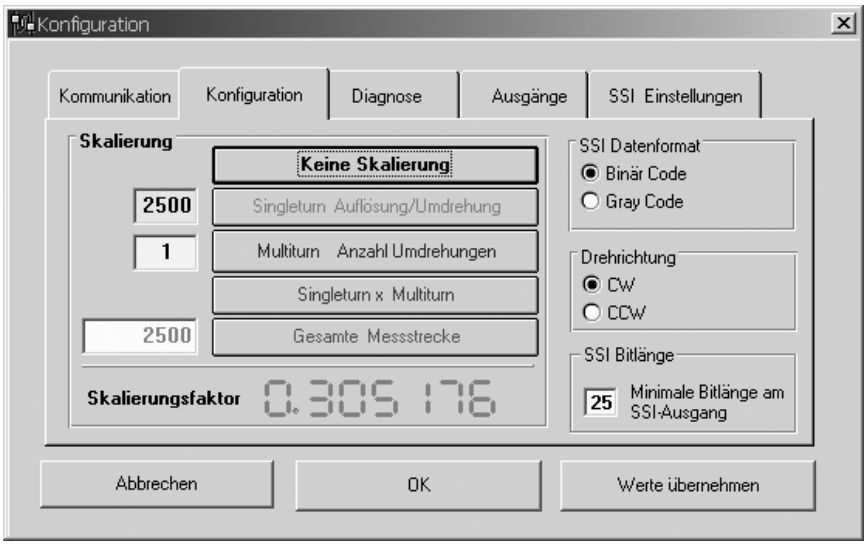

Absolute multiturn rotary position sensor shaft or hollow shaft version
Multiturn Type 9081 SSI, programmable

Terminal assignment (SSI Synchronous Serial interface with 12pin plug)

Signal:	0V	$+U_B$	+T	–T	+D	–D	ST	VR	A1	A2	A3	A4	⏚
Pin:	1	2	3	4	5	6	7	8	9	10	11	12	PH
Colour:	WH	BN	GN	YE	GY	PK	BU	RG	BK	VT	GY PK	RD BL	

T: Clock signal
D: Data signal
ST: SET input. The current position value is stored as new zero position (or the actual value is set to the preset value when using the programmable version).
VR: Up/down input. As long as this input is active, decreasing code values are transmitted when shaft turning clockwise.
PH: Plug housing
Insulate unused outputs before initial start-up.

A1, A2, A3, A4: outputs, with software programmable

Anschlussbelegung (RS485-Schnittstelle 12-poligem Stecker):

Signal:	0V	$+U_B$	–R/T	+R/T				VR					⏚
Pin:	1	2	3	4	5	6	7*	8	9	10	11	12	PH
Colour:	WH	BN	YE	GN				RD					

R = Receive-channel
T = Transmit-channel
VR: Up/down input. As long as this input (High-Level = + U_B) is active, decreasing code values are transmitted when shaft turning clockwise.
PH = Plug housing

* There is no set input for P3001 version, but it can be realised also with command "<ESC> G" (write preset).

Dimensions:

shaft version Ø12x30 mm

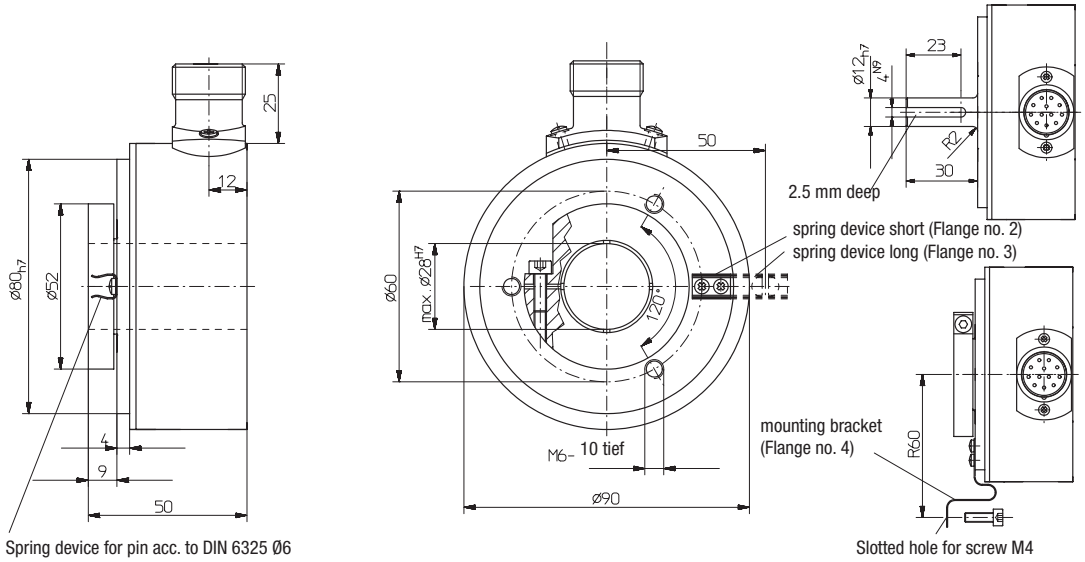

Mounting advice:

1) Do not connect rotary position sensor and drive rigidly to one another at shafts and flanges!

2) Delivery includes a corresponding cylindric pin (see drawing), when the rotary position sensor is ordered with flange type 2 (short spring device) or type 3 (long spring device).

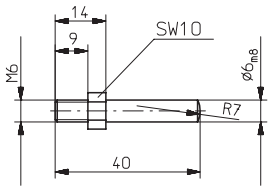

Top view of mating connector, male contact base:

12 pin plug

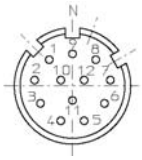

Absolute multiturn rotary position sensor shaft or hollow shaft version
Multiturn Type 9081 SSI, programmable

Max. permissible drive shaft impact:

Type of flange:	Permissible axial impact	Permissible radial play	Permissible angular play
Flange type 2 (short spring device):	max. ±1 mm[1)]	max. ±0.3 mm	max. ±2°
Flange type 3 (long spring device):	∞[2)]	max. ±0.3 mm	max. ±2°
Flange type 4 (mounting bracket):	max. ±0.5 mm	max. ±0.3 mm	max. ±2°

1) When mounting the rotary position sensor ensure that
L min. is larger than the axial play of the drive.

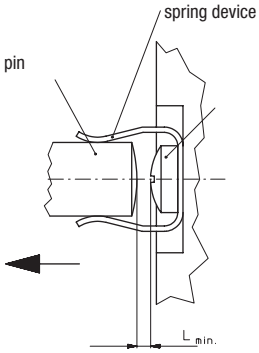

2) When mounting as shown. In all other cases view flange type 2

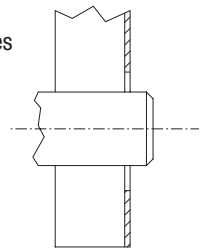

Order code: **T8.9081.XXXX.XXXX**

Range

Flange
- 1 = without mounting aid
- 2 = with short spring device
- 3 = with long spring device
- 4 = with mounting bracket

Shaft/hollow shaft
- 1 = hollow shaft Ø 12 mm
- 2 = hollow shaft Ø 15 mm
- 3 = hollow shaft Ø 20 mm
- 4 = hollow shaft Ø 24 mm
- 5 = hollow shaft Ø 28 mm
- 6 = hollow shaft Ø 5/8"
- 7 = hollow shaft Ø 1"
- 8 = shaft Ø 12 x 30 mm

Interface and supply voltage
- 2 = SSI 5 ... 30 VDC
- 3 = RS 485, halfduplex 5 ... 30 VDC

SSI-Interface*
- 2001 = 4096 x 4096 (24-Bit), Binary
- 2002 = 8192 x 4096 (25-Bit), Binary
- 2003 = 4096 x 4096 (24-Bit), Gray
- 2004 = 8192 x 4096 (25-Bit), Gray

RS 485-Interface, halfduplex-mode
- 3001 = ESC-protocol
  max. 38400 baud

Type of connection
- 2 = 12 pin plug without mating connector

*This factory set (default) resolution can be re-programmed by using the software.

Accessories:

Corresponding mating connector
to connection type 2
Ord.No T8.0000.5012.0000

Programming kit includes
- Interface converter
- Connection cable with the interface converter rotary position sensor – PC
- 90-250 V AC power supply
- CD-ROM with software

Order code T8.0010.9000.0004

Further accessories see accessories chapter in the rotary position sensor catalogue

Cable with plug:
Order-No.: T8.0000.6901.00XX.0031
XX = length in m (3, 5, 8, 10, 15)

Absolute multiturn rotary position sensor with PROFIBUS-DP interface
Multiturn Type 5860 PROFIBUS-DP

- Field bus interface: **PROFIBUS-DP**
- Shaft ø 6 or ø 10 mm
- Shock resistant up to 250 g
- Housing ø 58 mm
- Patented Integrated Technology ®
- Divisions: up to 8192 (13 bits) per revolution, 4096 (12 bits) revolutions
- Protection to IP65
- Integrated T-Coupler
- Contactless multiturn gear with new patented Intelligent-Sensing-Technology (IST). This technology is perfectly resistant to EMI and increases battery life. The battery outlasts bearing life. The technology feature safety system with redundant multiturn sensors diagnosis and alarm outputs
- Additionally to PROFIBUS-DP 2.0 standard the interface suppports the diagnostic and alarm monitoring.

Mechanical characteristics:

Speed: [1]	max. 6000 min^{-1}
Rotor moment of inertia:	appr. 1.8 x 10^{-6} kgm^2
Starting torque shaft version:	< 0,01 Nm
Radial load capacity of shaft:	radial: 80 N, axial: 40 N
Weight:	ca. 0,7 kg
Protection acc. to EN 60 529:	IP65
Working temperature:	–20° C ... +80 °C
Operating temperature:	–20° C ... +85 °C
Shaft	stainless steel
Shock resistance acc. to DIN-IEC 68-2-27	2500 m/s^2, 6 ms
Vibration resistance acc. to DIN-IEC 68-2-6:	100 m/s^2, 10 ... 2000 Hz

[1] for continuous operation 3000 min^{-1}

Specification to PROFIBUS-DP 2.0 standard (DIN 19245 Part 3)

Electrical characteristics:

Supply voltage (U_B):	10 ... 30 VDC
Current consumption:	max. 0.29 A
recommended fuse:	T 0,315 A
Linearity:	±1/2 LSB (± 1 LSB at 13, 14, 25 or 26 bit resolution)
Code:	Binary
Interface:	RS 485
Protocol:	**PROFIBUS-DP, rotary position sensor profile class 2**
Rate:	max: 12 MBits/s
Address:	programmable via DIP switches
Conforms to CE requirements acc. to EN 50082-2, EN 50081-2, EN 55011 Class B and EN 61000–4–8	
Performance against magnetic influence acc. to EN61000-4, 5	

PROFIBUS Encoder-Profile:

The basic functions of the PROFIBUS-DP are only described in extracts in here. For additional information, please refer to the standards on PROFIBUS-DP, i.e. DIN 19245-3 and EN 50170 respectively.

The following parameters can be programmed:

- Direction of rotation
- Scaling factor
  - number of pulses/rotation
  - total resolution
- Preset value
- Diagnostics mode

The following functionality is integrated

- Galvanic insulation of the Fieldbus-stagewith DC/DC converter
- Line driver according to RS 485 max. 12 MB
- Addressing by means of rotary switches
- Diagnostics LED
- Full Class 1 and Class 2 functionality

Absolute multiturn rotary position sensor with PROFIBUS-DP interface
Multiturn Type 5860 PROFIBUS-DP

Terminal assignment:

Einsetzbare Kabeldurchmesser	
Spannungsversorgung, max. Kabeldurchmesser	4,5 ... 6,5 mm
Datenleitung, max. Kabeldurchmesser	8 ... 10 mm

Signal:	ENC.			Bus IN		Bus OUT		ENC.		
Pin:	+ VDC	GND	GND	B	A	A	B	GND	GND	+VDC
Clamp:	1	2	3	4	5	6	7	8	9	10

Shield must be connected to the PG gland

Terminal assignment with M12 connector:

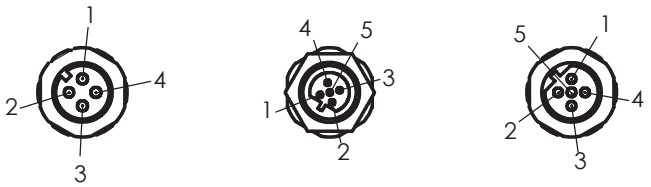

Supply voltage:

Signal :	U_B	–	0 V	–
Pin:	1	2	3	4

Bus in:

Signal :	–	BUS-A	–	BUS-B	–
Pin:	1	2	3	4	5

Bus out:

Signal :	BUS_VDC	BUS-A	BUS_GND	BUS-B	Schirm
Pin:	1	2	3	4	5

Dimensions:

Synchronous flange

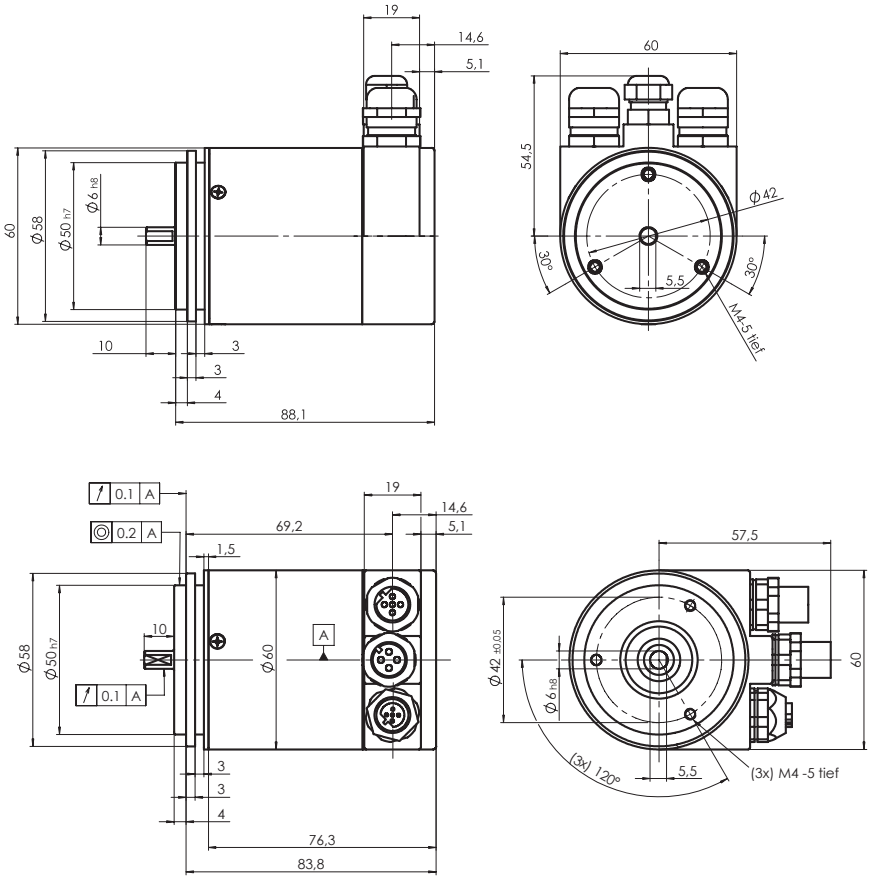

Absolute multiturn rotary position sensor with PROFIBUS-DP interface
Multiturn Type 5860 PROFIBUS-DP

Clamping flange

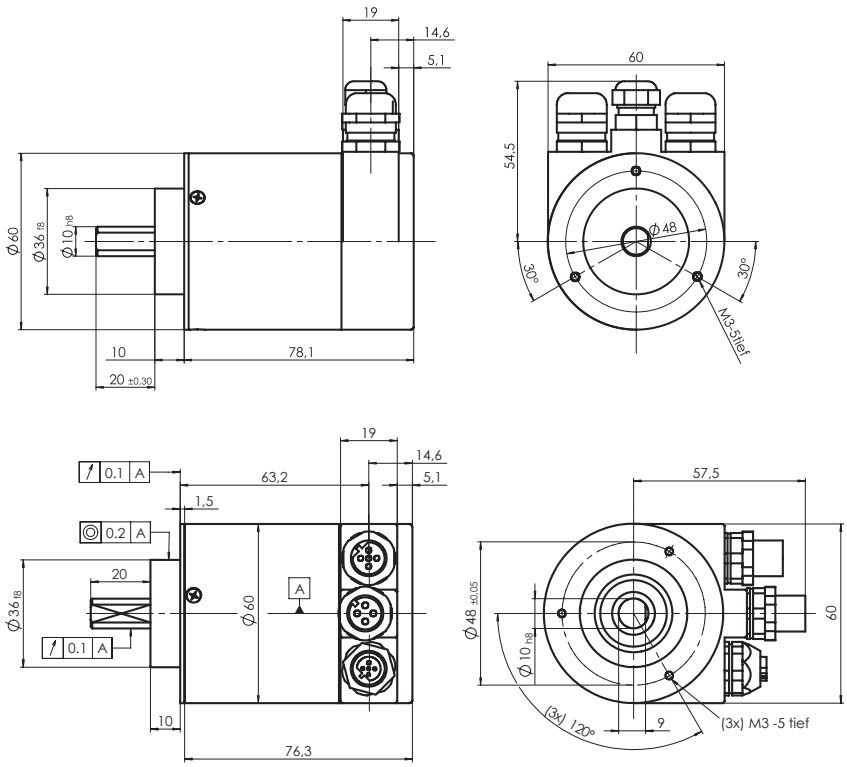

Patented "Integrated Technology®" uses single board construction, deliberate assembly techniques, and two ASIC design:

- Shock up to 250gs
- Higher vibration specs and thermal shock performance
- Lower parts count, elimination of potentiometers
- Higher resistance to EMI

Electronic multiturn increases performance, eliminates gears

- Reliability - No backlash errors, resistant to EMI, lower parts count
- Higher life - No mechanical wear, lower internal temperature
- Higher performance - Higher operating speeds
- Lower profile - compact size, hollow shaft
- Economical - Lower cost

Patented "Intelligent Sensing Technology®"

- Multiturn design that protects rotary position sensor from EMI and increases battery life to 10 years.
- The battery outlasts both application requirements and system components (LEDs & bearings)
- Redundant multiturn sensors and counters increase reliability & life
- Active system output monitoring using digital filters to compare data to logical & target bits.

Order code:

T8.5860.XXX1.3001

Range

Flange
1 = Clamping flange
2 = Synchronous flange

Shaft
1 = Shaft Ø 6 x 10 mm
2 = Shaft Ø 10 x 20 mm

Interface and supply voltage
3 = PROFIBUS-DP, Class 2 10 ... 30 V DC

PROFIBUS-DP
3001 = PROFIBUS-DP Class 2

Type of connection
1 = socket box with PG7

Includes:
GSD-file and documentation on CD

Accessories:
Further accessories see rotary position sensor catalogue

Absolute multiturn rotary position sensor with PROFIBUS-DP interface
Multiturn Type 9080 PROFIBUS-DP

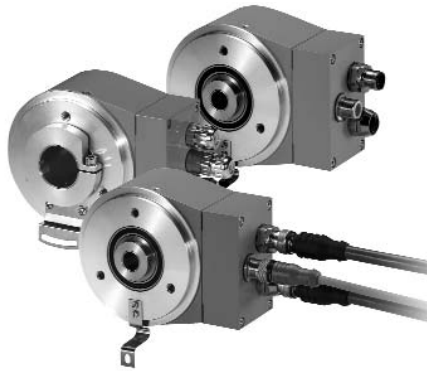

- Field bus interface: **PROFIBUS-DP**
- Hollow shaft up to Ø 28 or shaft Ø 12 mm
- Shock resistant up to 250 g
- Only 60 mm clearance needed
- Patended integrative technology
- Very easy mounting of the hollow shaft version. The rotary position sensor is mounted directly on the drive shaft without coupling. This saves up to 30 % cost and 50 % clearance compared to shaft versions.
- Divisions: up to 8192 (13 bits) per revolution, 4096 (12 bits) revolutions
- Contactless multiturn gear with new Intelligent-Sensing-Technology (IST)
- Simply connection patent pending connecting system with removable socket box
- Integrated T-coupler
- Protection: IP65

Mechanical characteristics:

Speed: [1]	max. 6000 min^{-1}
Rotor moment of inertia:	appr. 72 x 10^{-6} kgm^2
Starting torque hollow shaft version:	< 0.2 Nm
Starting torque shaft version:	< 0.05 Nm
Radial load capacity of shaft: [2]	radial: 80 N, axial 40 N
Weight:	appr. 0.9 kg
Protection acc. to EN 60 529:	IP65
Working temperature:	–10° C ... +70 °C
Operating temperature:	–10° C ... +80 °C
Shaft:	stainless steel
Shock resistance acc. to DIN-IEC 68-2-27	2500 m/s^2, 6 ms
Vibration resistance acc. to DIN-IEC 68-2-6:	100 m/s^2, 10 ... 2000 Hz

[1] for continuous operation 3000 min^{-1}
[2] shaft version only (at shaft end).

Specification to PROFIBUS-DP 2.0 standard (DIN 19245 Part 3)

Electrical characteristics:

Supply voltage (U_B):	10 ... 30 VDC
Current consumption type:	max. 0,29 A
recommended fuse	T 0,315 A
Linearity	±1/2 LSB (± 1 LSB at 13, 14, 25 or 26 bit resolution)
Code	Binary
Interface	RS 485
Protocol	PROFIBUS-DP, rotary position sensor profile class 2
Rate	max. 12 Mbit/s
Address	adjustable with DIP-switches
Conforms to CE requirements acc. to EN 50082-2, EN 50081-2, EN 55011 Class B and EN 61000–4–8	
Performance against magnetic influence acc. to EN61000-4, 5	

PROFIBUS Encoder-Profile:

The basic functions of the PROFIBUS DP are only described in extracts in here. For additional information, please refer to the standards on PROFIBUS-DP, i.e. DIN 19245-3 and EN 50170 respectively.

The following parameters can be programmed:

- Direction of rotation
- Scaling factor
  - number of pulse/rotation
  - total resolution
- Preset value
- Diagnostics mode

The following functionality is integrated:

- Galvanic insulation of the Fieldbus-stagewith DC/DC converter
- Line driver according to RS 485 max. 12 MB
- Addressing by means of rotary switches
- Diagnostics LED
- Full Class 1 and Class2 functionality

Absolute multiturn rotary position sensor with PROFIBUS-DP interface
Multiturn Type 9080 PROFIBUS-DP

Terminal assignment

Signal:	ENC.			Bus IN		Bus OUT		ENC.			Shield [1]	
Pin:	+ VDC	GND	GND	B	A	A	B	GND	GND	+VDC		
Clamp:	1	2	3	4	5	6	7	8	9	10	11	12

[1] only Device-Net Profile (Device Net in preparation)

Einsetzbare Kabeldurchmesser	
Spannungsversorgung, max. Kabeldurchmesser	4,5 ... 6,5 mm
Datenleitung, max. Kabeldurchmesser	8 ... 10 mm

Terminal assignment with M12 connector:

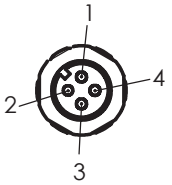

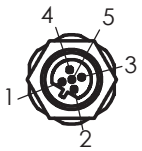

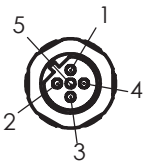

Supply voltage:

Signal :	U_B	–	0 V	–
Pin:	1	2	3	4

Bus in:

Signal :	–	BUS-A	–	BUS-B	–
Pin:	1	2	3	4	5

Bus out:

Signal :	BUS-VDC	BUS-A	BUS-GND	BUS-B	Schirm
Pin:	1	2	3	4	5

Dimensions

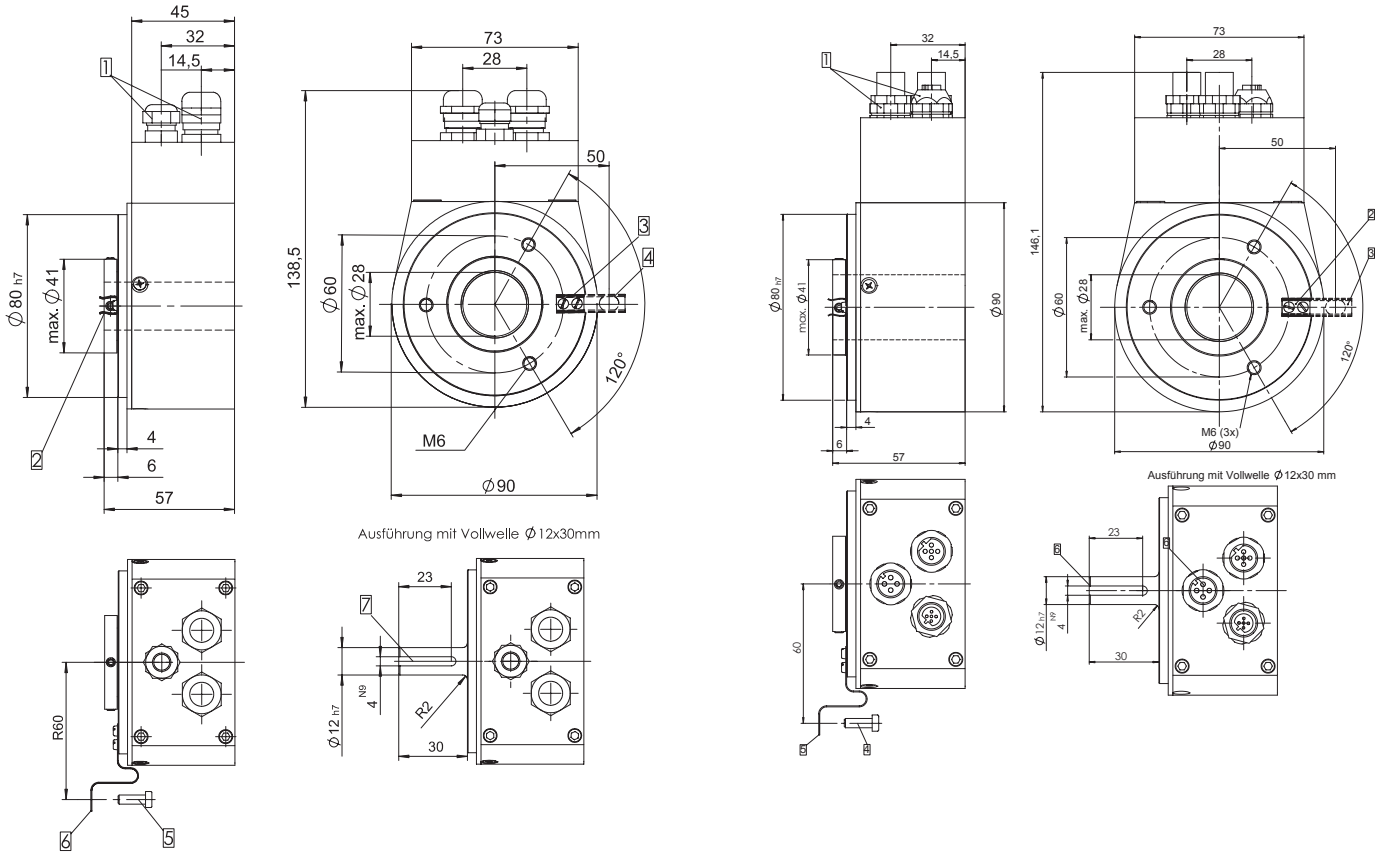

Mounting advice:

Do not connect rotary position sensor and drive rigidly to one another at shafts and flanges.

1 Cable fitting
2 Spring device for pin acc. to DIN 6325 Ø6
3 spring device short (Flange no. 2)
4 spring device long (Flange no. 3)
5 Slotted hole for M4 screws
6 Mounting bracket (Flange no. 4)
7 2.5 mm deep

Absolute multiturn rotary position sensor with PROFIBUS-DP interface
Multiturn Type 9080 PROFIBUS-DP

Max. permissible drive shaft impact:

Flange type:	Permissible axial impact	Permissible radial impact	Permissible angular play
Flange type 2 (short spring device):	max. ±1 mm[1)]	max. ±0.3 mm	max. ±2°
Flange type 3 (long spring device):	∞[2)]	max. ±0.3 mm	max. ±2°
Flange type 4 (mounting bracket):	max. ±0,5 mm	max. ±0.3 mm	max. ±2°

[1)] When mounting the rotary position sensor make sure that the dimension $L_{min.}$ is larger than the maximum axial play of the drive in the direction of the arrow. Danger of mechanical collision !

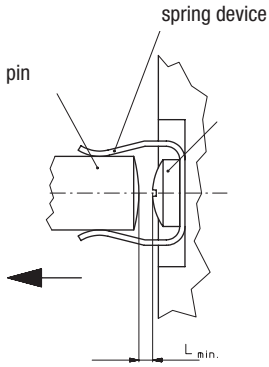

[2)] When mounting as shown, else see flange type 2

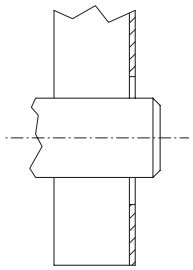

Patended "Integrated Technology®" uses single board construction, deliberate assembly techniques, and two ASIC design:
- Shock up to 250gs
- Higher vibration specs and thermal shock performance
- Lower parts count, elimination of potentiometers
- Higher resistance to EMI

Electronic multiturn increases performance, eliminates gears
- Reliability - No backlash errors, resistant to EMI, lower parts count
- Higher life - No mechanical wear, lower internal temperature
- Higher performance - Higher operating speeds
- Lower profile - compact size, hollow shaft
- Economical - Lower cost

Patended "Intelligent Sensing Technology®"
- Multiturn design that protects rotary position sensor from EMI and increases battery life to10 years.
- The battery outlasts both application requirements and system components (LEDs & bearings)
- Redundant multiturn sensors and counters increase reliability & life
- Active system output monitoring using digital filters to compare data to logical & target bits.

Order code:

T8.9080.XXXX.XXXX

Range

Flange
- 1 = without mounting aid
- 2 = with short spring device
- 3 = with long spring device
- 4 = with mounting bracket

Shaft/hollow shaft
- 1 = hollow shaft Ø 12 mm
- 2 = hollow shaft Ø 15 mm
- 3 = hollow shaft Ø 20 mm
- 4 = hollow shaft Ø 24 mm
- 5 = hollow shaft Ø 28 mm
- 6 = hollow shaft Ø 5/8"
- 7 = hollow shaft Ø 1"
- 8 = shaft Ø 12 x 30 mm

Interface and supply voltage
- 3 = PROFIBUS-DP 10 ... 30 VDC

PROFIBUS-DP
- 3001 = PROFIBUS Class 2

Type of connection
- 1 = socket box with PG7 screwed connections and integrated T–coupler

Delivery includes:
GSD-file and documentation on CD

Accessories:

Further accessories see rotary position sensor catalogue

Absolute multiturn rotary position sensor with CANopen interface
Multiturn Type 9080 CANopen

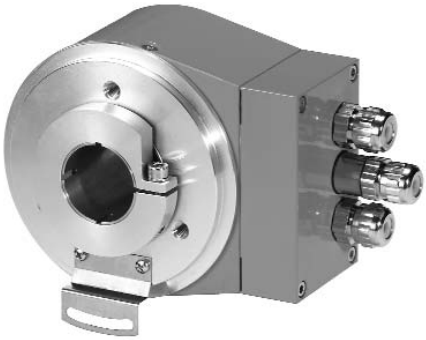

- Field bus interface: **CANopen**
- Hollow shaft up to Ø 28 or shaft Ø 12 mm
- Shock resistant up to 250 g
- Only 60 mm clearance needed
- Patended integrative technology
- Very easy mounting of the hollow shaft version. The rotary position sensor is mounted directly on the drive shaft without coupling. This saves up to 30 % cost and 50 % clearance compared to shaft versions.
- Divisions: up to 8192 (13 bits) per revolution, 4096 (12 bits) revolutions
- Contactless multiturn gear with new Intelligent-Sensing-Technology (IST)
- Simply connection patent pending connecting system with removable socket box
- Integrated T-coupler
- Protection: IP65

Mechanical characteristics:

Speed: 1)	max. 6000 min^{-1}
Rotor moment of inertia:	appr. 72 x 10^{-6} kgm^2
Starting torque hollow shaft version:	< 0.2 Nm
Starting torque shaft version:	< 0.05 Nm
Radial load capacity of shaft: 2)	radial: 80 N, axial 40 N
Weight:	appr. 0.9 kg
Protection acc. to EN 60 529:	IP65
Working temperature:	–10° C ... +70 °C
Operating temperature:	–10° C ... +80 °C
Shaft:	stainless steel
Shock resistance acc. to DIN-IEC 68-2-27	2500 m/s^2, 6 ms
Vibration resistance acc. to DIN-IEC 68-2-6:	100 m/s^2, 10 ... 2000 Hz

1) for continuous operation 3000 min^{-1}
2) shaft version only (at shaft end)

Specification to ISO 11898

Electrical characteristics:

Supply voltage (U_B):	10 ... 30 VDC
Current consumption type:	max. 0,29 A
recommended fuse	T 0,315 A
Linearity	±1/2 LSB (± 1 LSB at 13, 14, 25 or 26 bit resolution)
Code	Binary
Interface	RS 485
Protocol	**CANopen, rotary position sensor profile class 2**
Rate	max. 12 Mbit/s
Address	adjustabll with DIP-switches
Conforms to CE requirements acc. to EN 50082-2, EN 50081-2, EN 55011 Class B and EN 61000–4–8	
Performance against magnetic influence acc. to EN61000-4, 5	

CANopen - Device-Profile:
The basic functions of the CANopen are only described in extracts in here. For additional information, please refer to the standards on Device Profile DSP 406 i.e.
ISO 11898

The following parameters can be programmed:

- Polling mode/auto mode;cycle time
- Resolution
- Direction
- number of pulse/rotation
- total resolution
- Preset value
- Offset value

The following functionality is integrated:

- Class C2 functionality
- NMT-Slave
- Diagnostics 2 Bit
- CAN-LED for bus status
- CAN-LED for operating mode

Absolute multiturn rotary position sensor with CANopen interface
Multiturn Type 9080 CANopen

Terminal assignment

Signal:	ENC.			Bus IN		Bus OUT		ENC.			Shield [1]	
Pin:	+ VDC	GND	GND	B	A	A	B	GND	GND	+VDC		
Clamp:	1	2	3	4	5	6	7	8	9	10	11	12

[1] only Device-Net Profile (Device Net in preparation)

Dimensions

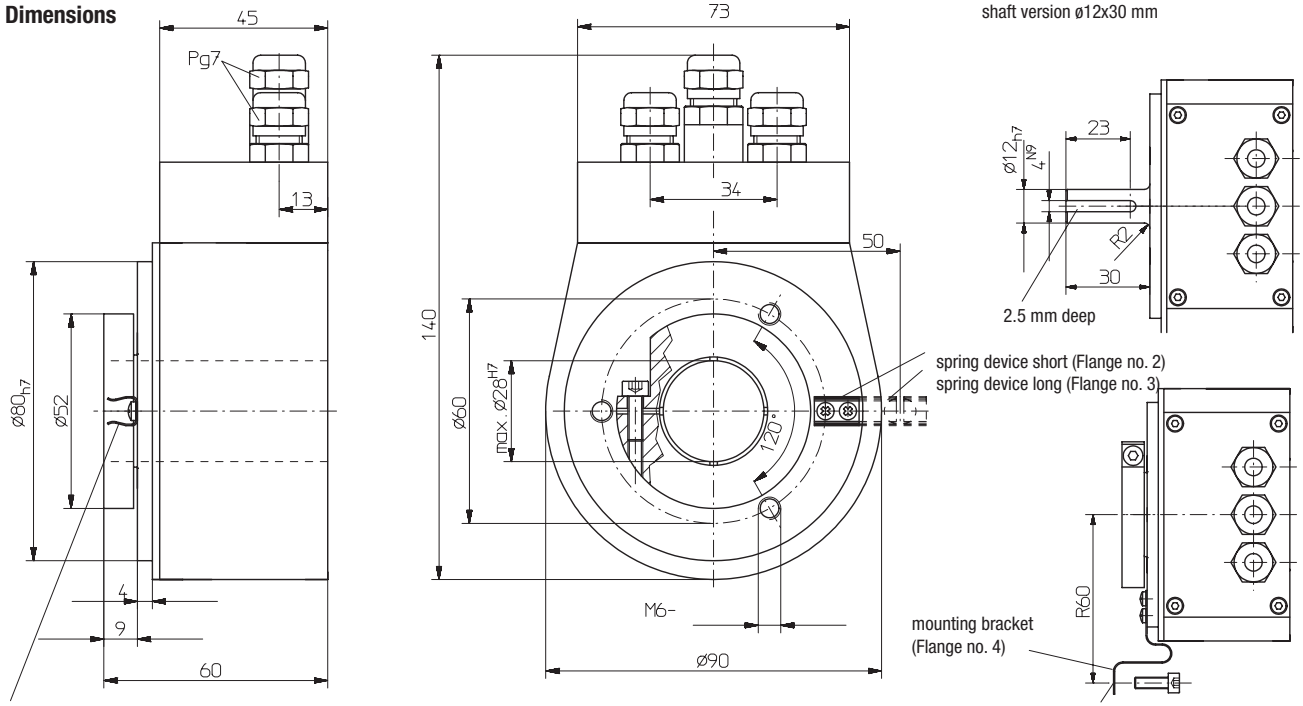

Mounting advice::

Do not connect rotary position sensor and drive rigidly to one another at shafts and flanges.

Max. permissible drive shaft impact:

Flange type:	Permissible axial impact	Permissible radial impact	Permissible angular play
Flange type 2 (short spring device):	max. ±1 mm[1]	max. ±0.3 mm	max. ±2°
Flange type 3 (long spring device):	∞[2]	max. ±0.3 mm	max. ±2°
Flange type 4 (mounting bracket):	max. ±0.5 mm	max. ±0.3 mm	max. ±2°

[1] When mounting the rotary position sensor make sure that the dimension $L_{min.}$ is larger than the maximum axial play of the drive in the direction of the arrow. Danger of mechanical collision !

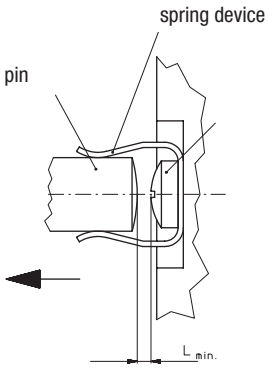

[2] When mounting as shown, else see flange type 2

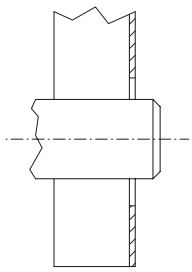

Absolute multiturn rotary position sensor with CANopen interface
Multiturn Type 9080 CANopen

Patended "Integrated Technology®" uses single board construction, deliberate assembly techniques, and two ASIC design:
- Shock up to 250gs
- Higher vibration specs and thermal shock performance
- Lower parts count, elimination of potentiometers
- Higher resistance to EMI

Electronic multiturn increases performance, eliminates gears
- Reliability - No backlash errors, resistant to EMI, lower parts count
- Higher life - No mechanical wear, lower internal temperature
- Higher performance - Higher operating speeds
- Lower profile - compact size, hollow shaft
- Economical - Lower cost

Patended "Intelligent Sensing Technology®"
- Multiturn design that protects rotary position sensor from EMI and increases battery life to10 years.
- The battery outlasts both application requirements and system components (LEDs & bearings)
- Redundant multiturn sensors and counters increase reliability & life
- Active system output monitoring using digital filters to compare data to logical & target bits.

Order code: **8.9080.XXXX.XXXX**

Range

Flange
- 1 = without mounting aid
- 2 = with short spring device
- 3 = with long spring device
- 4 = with mounting bracket

Shaft/hollow shaft
- 1 = hollow shaft Ø 12 mm
- 2 = hollow shaft Ø 15 mm
- 3 = hollow shaft Ø 20 mm
- 4 = hollow shaft Ø 24 mm
- 5 = hollow shaft Ø 28 mm
- 6 = hollow shaft Ø 5/8"
- 7 = hollow shaft Ø 1"
- 8 = shaft Ø 12 x 30 mm

Interface and supply voltage
- 2 = CANopen 10 ... 30 VDC

CANopen
- 2001 = CANopen rotary position sensor

Profile

Type of connection
- 1 = socket box with PG7 screwed connections and integrated T–coupler

Delivery includes:
ESD-file and documetation on CD

Accessories:

Further accessories see rotary position sensor catalogue

Absolute rotary position sensor hollow shaft version with Ex-proof Type 7031

- EEx d IIC T6 approval
- Very compact design, housing Ø70 mm
- Hollow shaft or shaft Ø 12 mm
- Divisions: up to 16384 (14 bits)
- Various options (e.g. LATCH, SET...)
- Gray, Binary or BCD code
- SSI, parallel or current (4..20 mA) interface
- Temperature and ageing compensation
- Short-circuit proof outputs

* Patented new type of construction integrates all components; use of an opto-asic and 6-layer multilayer technology now on just a single PCB with resolution of up to 14 bits.

- **New: 4 ... 20 mA output**

Mechanical characteristics:

Speed:	max. 6000 min^{-1}
Rotor moment of inertia:	appr. 8 x 10^{-6} kgm^2
Starting torque:	< 0.05 Nm
Radial load capacity of shaft*:	20 N
Axial load capacity of shaft:*:	10 N
Weight:	appr. 0.9 kg
Protection acc. to EN 60 529:	IP 64
Working temperature:	-20° C ... +60 °C
Operating temperature:	-20° C ... +70 °C
Shaft:	stainless steel
Shock resistance acc. to DIN-IEC 68-2-27	1000 m/s^2, 6 ms
Vibration resistance acc. to DIN-IEC 68-2-6:	100 m/s^2, 10...2000 Hz

*)shaft version: end of the shaft

Pulse rates available at short notice:

Gray/Binary
250, 360[1)], 500, 720[1)], 900, 1000[1)], 1024 (10 Bit)[1)], 1250, 1440, 1800, 2000, 2500, 2880, 3600[1)], 4000, 4096 (12 Bit)[1)], 5000, 7200, 8192 (13 Bit)[1)], 16384 (14 Bit)[1)]

BCD
250, 360[1)], 500, 720[1)], 900, 1000[1)], 1024 (10 Bit)[1)], 1250, 1440, 1800, 2000
Other on request
Preferred divisions are bold
(reduced delivery time)

Electrical characteristics:

Interface type:	Synchronous-Serial (SSI)	Synchronous-Serial (SSI)	Parallel	Parallel
Supply voltage (U_B):	5 VDC (± 5 %)	10 ... 30 VDC	5 VDC (± 5%)	10 ... 30 VDC
Output driver:	RS 485	RS 485	Push-pull	Push-pull
Current consumption typ. 89 mA	89 mA	109 mA	109 mA	
(no load) max.:	138 mA	138 mA	169 mA	169 mA
Permissible load/channel max.:	+/- 20 mA	max. +/- 20 mA	max. +/- 10 mA	max. +/-10 mA
Word change frequency	max. 15.000/s	max.15.000/s	40.000/s	40.000/s
SSI pulse rate min./max.: 100 kHz/500 kHz	100 kHz/500 kHz	–	–	
Signal level high:	type. 3.8 V	typ. 3.8 V	min. 3.4 V	min. U_B - 2.8 V
Signal level low				
(I_{Load} = 20 mA):	typ. 1.3 V	typ. 1.3 V	–	–
(I_{Load} = 10 mA):	–	–	max. 1.5 V	max. 1.8 V
(I_{Load} = 1 mA):	–	–	max. 0.3 V	–
Rise time t_r (without cable):	max. 100 ns	max. 100 ns	max. 0.2 µs	max. 1 µs
Fall time t_f (without cable): max. 100 ns	max. 100 ns	max. 0,2 µs	max. 1 µs	
Short circuit proof outputs:[1)]:	yes	yes[2)]	yes	yes
Reverse connection protection at U_B:	no	yes	no	yes
Conforms to CE requirements acc. to EN 50082-2, EN 50081-2 and EN 55011 Class B				

[1)]When supply voltage correctly applied
[2)]Only one channel at a time: When U_B = 5 VDC, short-circuit to channel, 0 V or UB is permitted.
When U_B = 10 ... 30 VDC short-circuit to channel or 0 V is permitted.
(bei U_B = 10 ... 30 V ist Kurzschluss gegenüber einem anderen Kanal oder 0 V zulässig.)

Note:

All standards for installation of electrical systems in hazardous environment have to be observed.

Manipulations (opening, mechanical treatment etc.) cause the loss of the EX- license, warranty claims will not be accepted and the installer will be responsible for any consequential damages.

Absolute rotary position sensor hollow shaft version with Ex-proof Type 7031

Elektrische Kennwerte Stromschnittstelle 4 ... 20 mA:

Sensor part		
Interface type:	4 ... 20 mA	4 ... 20 mA
Supply voltage (U_B):	10 ... 30 VDC	5 VDC
Current consumption typ.:	70 mA	70 mA
(no load) max.:	84 mA	84 mA
Word change frequency	max. 15.000/s	max. 15.000/s

Current loop		
Supply voltage:	10 ... 30 VDC	10 ...30 VDC
Analogue signal	4 ... 20 mA	4 ... 20 mA
max. input resistance of the input circuit:	200 Ω	200 Ω
Measuring rage:	0 ... 360 °	0 ... 360 °
Max. failure (25 °C):	0.2 °	0.2 °
Resolution	13 Bit	13 Bit
Building up time:	max. 2 ms	max. 2 ms
Temperature coeffincient	0,1°/10 K	0.1°/10 K
Current if detector error:	≤ 3 mA	≤ 3 mA
Sensor and current loop are galvanically insulated		
Conforms to CE requirements acc. to EN 50082-2, EN 50081-2 and EN 55011 Class B		

Control inputs:

Up/down input to switch the counting direction

As a standard, absolute rotary position sensors deliver increasing code values when the shaft rotates clockwise (cw), when looking from the shaft side. When the shaft rotates counter-clockwise (ccw), the output delivers accordingly decreasing code values. The same applies to models with current interfaces. When the shaft rotates clockwise, the output delivers increasing current values, and decreasing values when it rotates counter-clockwise.

As long as the Up/down input receives the corresponding signal (high), this feature is reversed. Clockwise rotation will deliver decreasing code/current values while counter-clockwise rotation will deliver increasing code/current values.

The response time is : for 5 VDC supply voltage, 0.4 ms
for 10 ... 30 VDC supply voltage, 2 ms.

SET input

This input is used to reset (to zero) the rotary position sensor. A control pulse (high) sent to this input allows storing the current position value as new zero position in the rotary position sensor.

For models equipped with a current interface, the analog output (4..20 mA) will be set accordingly to the value 4 mA.

Note :

before activating the SET input after supplying the rotary position sensor with the supply voltage, a counting direction (cw or ccw) must be defined univocally on the Up/down input!

The response time is : for 5 VDC supply voltage, 0.4 ms
for 10 ... 30 VDC supply voltage, 2 ms.

LATCH input

This input is used to „freeze“ the current position value. The position value will be statically available on the parallel output as long as this input will remain active (high).

The response time is : for 5 VDC supply voltage, 140 µs,
for 10 ... 30 VDC supply voltage,
200 µs.

Switching level of the control inputs:

Supply voltage:	5 VDC	10-30 VDC
low	≤1,7 V	≤ 4,5 V
high	≥3,4 V	≥8,7 V

Absolute rotary position sensor hollow shaft version with Ex-proof Type 7031

Terminal assignment (SSI interface):

Signal:	0V	+UB	+T	-T	+D	-D	ST	VR					⏚
Colour:	WH	BN	GN	YE	GY	PK	BU	RD	BK	VT	GY PK	RD BU	PH

T: Clock signal
D: Data signal
ST: SET input. The current position value is stored as new zero position.
VR: Up/down input. As long as this input is active, decreasing code values are transmitted when shaft turning clockwise.
PH: Plug housing
Insulate unused outputs before initial start-up.

Terminal assignment (Parallel interface, up to 14 bits and max. 2 options):

Sig.:	0V	+UB	1	2	3	4	5	6	7	8	9	10	11	12	13	ST/ VR	VR/ LH	14	⏚
Col.:	WH	BN	GN	YE	GY	PK	BU	RD	BK	VT	GY PK	RD BU	WH GN	BN GN	WH YE	YE BN	WH GY	GY BN	PH

ST: SET input. The current position value is stored as new zero position.
VR: Up/down input. As long as this input is active, decreasing code values are transmitted when shaft turning clockwise.
LH: LATCH input. High active. The current position is „frozen“. It is statically available at the parallel output.
PH: Plug housing
Insulate unused outputs before initial start-up.

Terminal assignment (Current interface 4..20 mA):

Sig.	0V	+UB	I+	I-	ST	VR		⏚
Col.:	WH	BN	GN	YE	GY	PK		PH

+I: Input of the current loop
-I: Output of the current loop
ST: SET input. The output current is set to 4 mA.
VR: Up/down input. As long as this input is active, decreasing current values are transmitted when shaft turning clockwise.
PH: Plug housing
Insulate unused outputs before initial start-up.

Absolute rotary position sensor hollow shaft version with Ex-proof Type 7031

Dimensions:
Synchronous flange with hollow shaft ø12

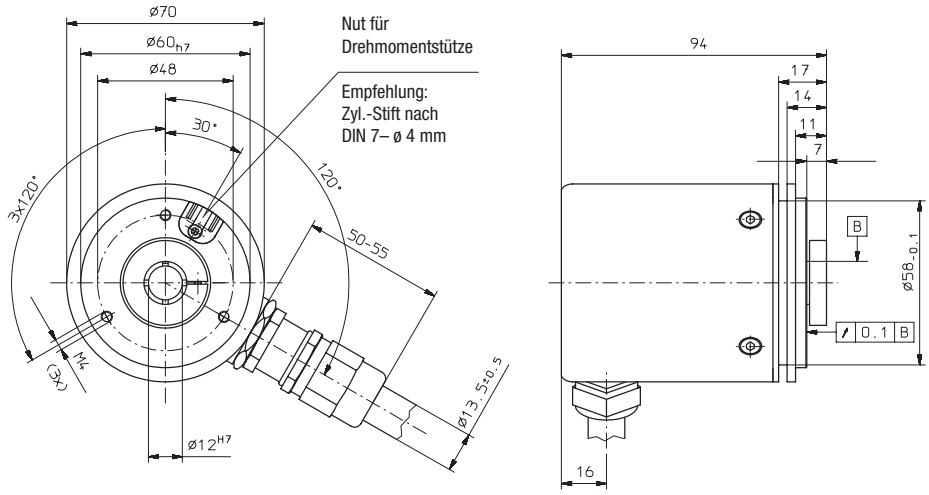

Clamping flange with shaft ø12

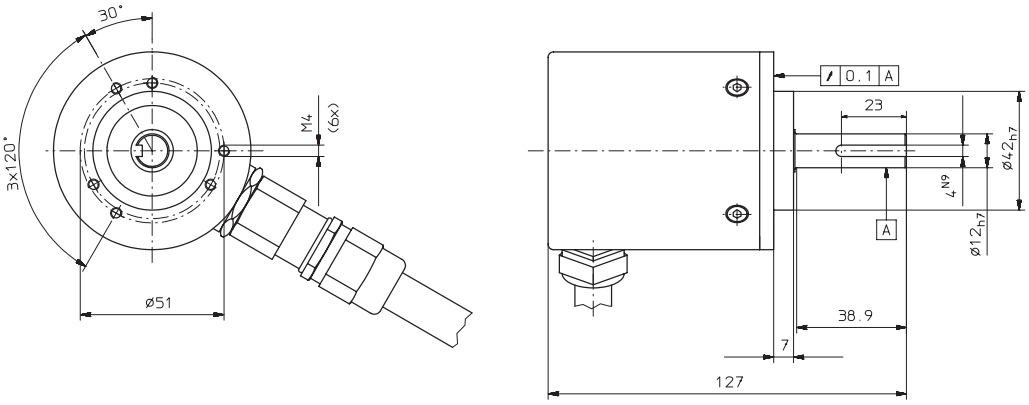

Clamping flange with flange adapter and shaft ø12

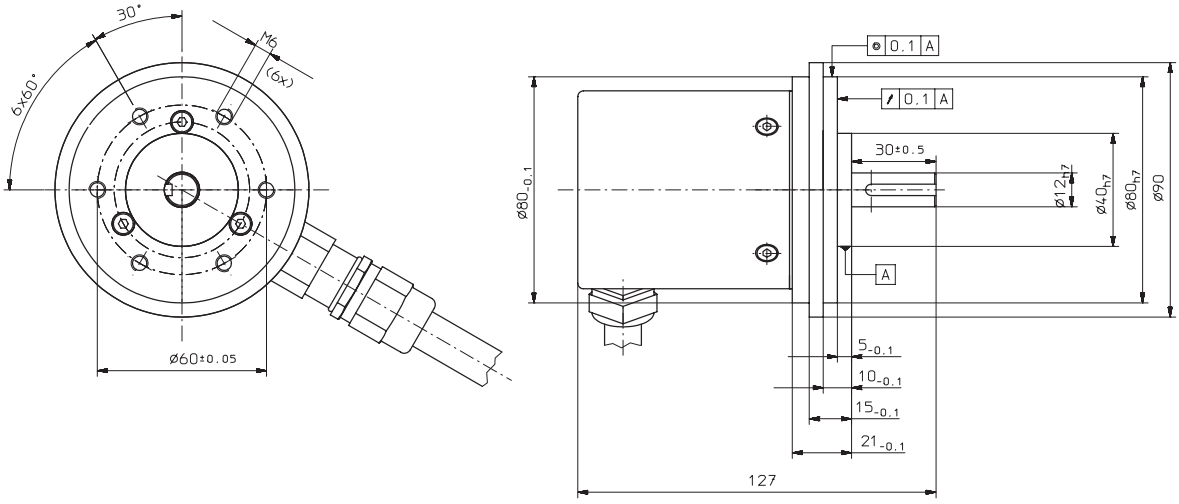

Absolute rotary position sensor hollow shaft version with Ex-proof Type 7031

Order code: **T8.7031.XXXX.XXXX**

Range

Flange and hollow shaft/shaft
- 14 = Synchronous flange with hollow shaft ø 12 mm
- 25 = Clamping flange with shaft ø 12 mm
- 26 = Clamping flange with shaft ø 12 mm and mounted flange adapter

Interface and supply voltage
- 1 = SSI mit 5 V supply voltage
- 2 = SSI with 10 ... 30 V supply voltage
- 3 = Parallel with 5 V supply voltage
- 4 = Parallel with 10 ... 30 V supply voltage
- 7 = 4 ... 20 mA with 5 V supply voltage
- 8 = 4 ... 20 mA with 10 ... 30 V supply voltage

Options
- 2 = SET[1] and V/R
- 3[2] = SET and Latch[1]
- 4[2] = V/R[1] and Latch
- Alarm output on request

[1] at 14 bits parallel output
[2] not with SSI or current interface

Type of code and division
- use corresponding table

Type of connection
- 2 = radial cable (2 m PVC-Cable) other cable lengths on request

Code type and division
Interface and supply voltage, version 3 or 4:

Division	Order code Gray/Gray-Excess	Order code Binary	Order code BCD
250	E02	B02	D02
360	E03	B03	D03
500	E05	B05	D05
720	E07	B07	D07
900	E09	B09	D09
1000	E01	B01	D01
1024 (10 Bit)	G10	B10	D10
1250	E12	BA2	DA2
1440	E14	BA1	DA1
1800	E18	B18	D18
2000	E20	B20	D20
2500	E25	B25	
2880	E28	B28	
3600	E36	B36	
4000	E40	B40	
4096 (12 Bit)	G12	B12	
5000	E50	B50	
7200	E72	B72	
8192 (13 Bit)	G13	B13	
16384 (14 Bit)	G14	B14	

Preferred divisions are bold

Code type and division for rotary position sensor with SSI-output
Interface and supply voltage, version 1 or 2:

Division	Order code Gray	Order code Binary
1024 (10 Bit)	G10	B10
4096 (12 Bit)	G12	B12
8192 (13 Bit)	G13	B13
16384 (14 Bit)	G14	B14

Code type and division for rotary position sensor with analogue output
Interface and supply voltage, version 7 or 8:

8192 (13 Bit)	G13

Accessories/Draw wire with rotary position sensor

with shaft rotary position sensor type 58xx

Your benefit:
- directly length measurement
- wide measuring range: up to 6 m
- high repeatability
- easy to mount
- no guiding system necessary
- Cable guide with guide pulley
- Distance and angle measurement are tandard tasks in machine-building and engineering industries. Turck wire-actuated transducers are an economical and easy to handle solution. Wire-actuated transducers transform linear movements into rotary motion by winding/unwinding a wire. The rotary motion is transmitted to an incremental or absolute rotary position sensor. Remote display units or controls can be used to display/process the measured values. Please ask about the Turck range of displays and counters!

Mechanical characteristics of the wire-draw rotary position sensor:

Measuring range:	up to 6000 mm
Repeatability: (if position is always approached from same direction)	~ 0,05 mm
Resolution:	0,1 mm (standard rotary position sensor) with 2000 ppr.
Extension length 200 mm:	~ 1 rotary position sensor revolution
Travel speed:	max. 3000 mm/s
Required pull on spring:	min. 5 N (on wire)
Wire diameter:	para wire 2,6 m: 1,05 mm steel wire 6 m: 0,54mm
Weight:	appr. 1,050 kg

Note!
If the maximum extension length is exceeded, the wire and transducer will be damaged.

Construction

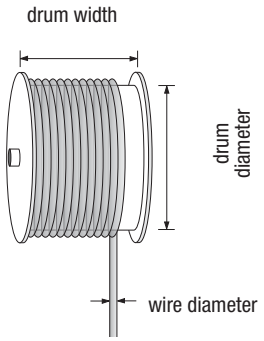

Structure:
Principal item of a draw wire rotary position sensor is a stored drum, on whose extent a rope is rolled up. Rolling up is made by a spring return mechanism.

Accuracy/measuring range:
It is guaranteed by the mechanical construction that the wire unwraps evenly on the drum. The dimension of the drum (diameter and width) and the diameter of the wire determine the maximum wire length. The measuring accuracy is only for the first rolled up situation accurately defined. The offered measuring range corresponds exactly to the maximum wire length, which can be rolled up on the first layer.

Wire:
There are two typs of wires. They are diferent in dimension, material, surface and their physical characteristics.
Para wire and steel wire.

Order information:
Choose for your application the suitable measuring range with the possible wire variants. Determine the necessary pre-length for your application. The sum of the measuring range and pre-length may not exceed the maximum length.

Definition der Bezeichnungen Messbereich und Vorauszugslänge

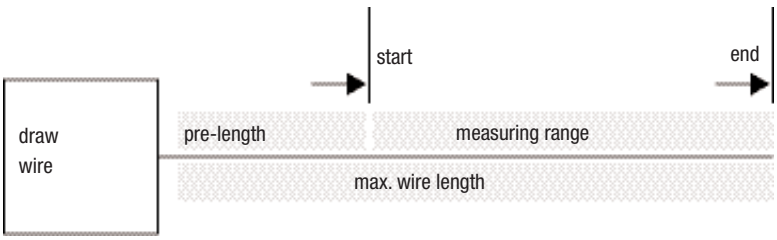

Accessories/Draw wire with rotary position sensor

Dimensions:

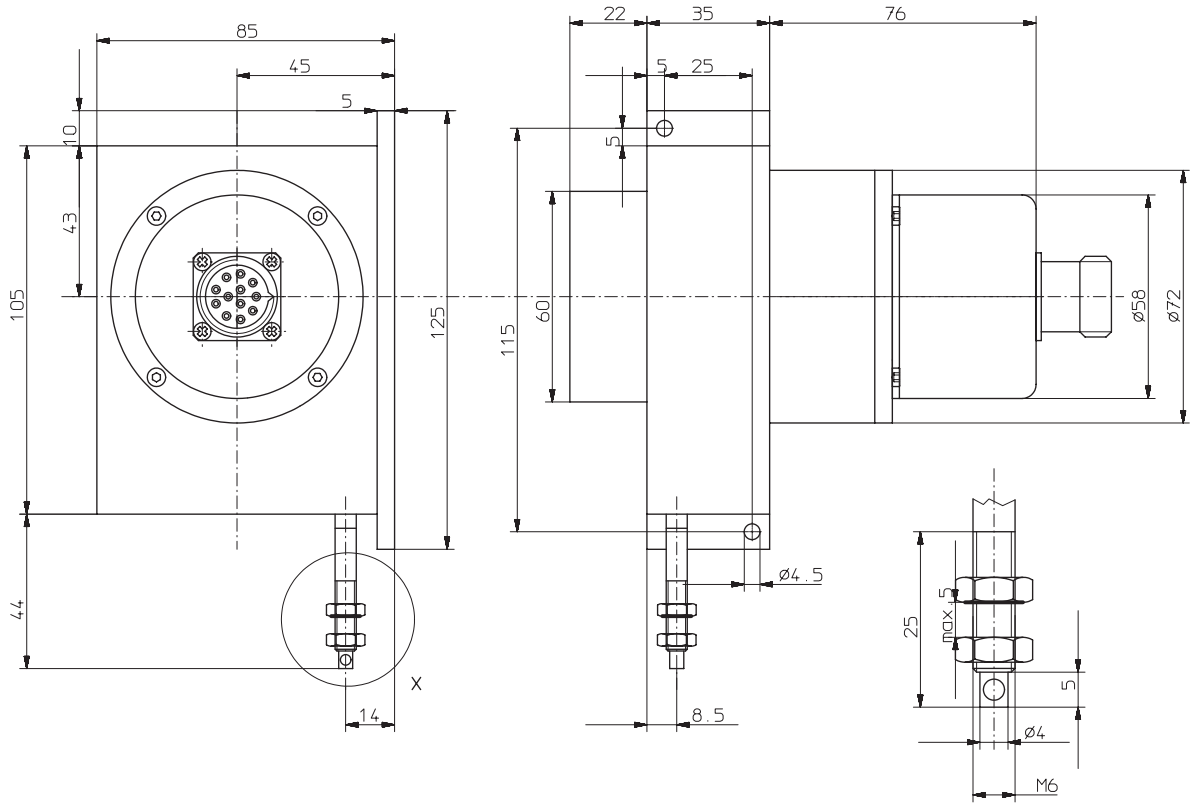

The following rotary position sensors can be mounted:

– **Incremental rotary position sensor**
  T8.5800.XXXX.XXXX
  T8.5802.XXXX.XXXX
  T8.5804.XXXX.XXXX
  T8.5805.XXXX.XXXX

– **Absolute multiturn rotary position sensor SSI/parallel**
  T8.5861.XXXX.XXXX
  T8.5862.XXXX.XXXX

– **Absolute multiturn rotary position sensor Profibus-DP**
  T8.5860.XXXX.XXXX

For ordering a combined unit out of draw wire and a suitable rotary position sensor, please use the combination order code represented at the end.

Application examples:

Automated storage / fork lifts

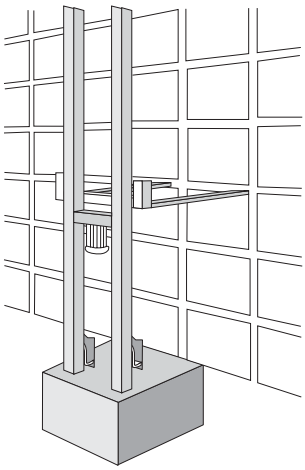

Printing machinery

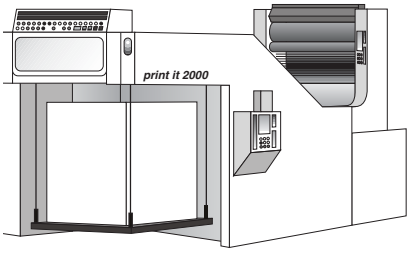

Scissor lift

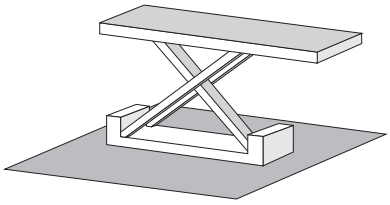

Accessories/Draw wire with rotary position sensor

Application examples:

pneumatic/hydraulic application

cranes and material handling

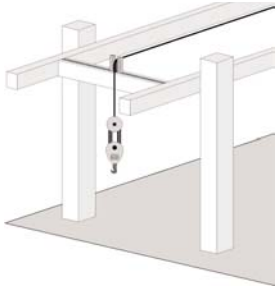

Order code:

T8.1XXX.XXXX.XXXX

Draw wire actuator

Wire
- 106 = steel wire, 6 m
- 2A1 = para wire 2,8 m

Encoder information*

Resolution/pulses/protokoll,
these data depends on the
choosen rotary position sensor*

Type of connection
these data depends on the
choosen rotary position sensor*

Output circuit
these data depends on the
choosen rotary position sensor*

Encoder*

00 = 58**00**	02 = 58**02**
04 = 58**04**	05 = 58**05**
10 = 58**10**	50 = 58**50**
52 = 58**52**	60 = 58**60**
61 = 58**61**	62 = 58**62**

*The type of rotary position sensor and its features the are specified.
The first two numbers describe the type of encoder e.g. 5802.
The further characteristics of the encoder can be defined as per the actual encoder catalogue.

Order example:
Draw wire actuator with 2,8 m para wire.
The rotary position sensor should be a 5802 with RS 422 (with inverting) and 5 V voltage supply. The connection should be 1 m axial cable (PVC). The pulse rate will be 2048.

Order code:
D8.12A1.0241.2048

- Pulse rate 2048
- Encoder 58**02**
- Date of the draw wire actuator

For the rotary position sensor order code, please refer to our rotary position sensor catalogue.

Stock products
D8.1106.0243.2000
D8.1106.0283.2000
D8.12A1.0243.2000
D8.12A1.0283.2000

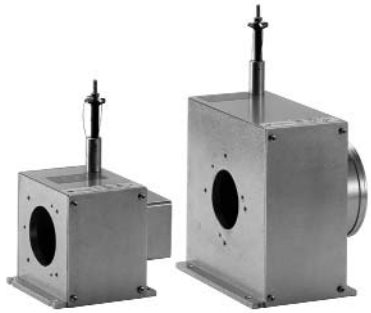

can be used togehter with shaft rotary position sensor type 58xx

Your benefit
- Measuring length up to 15 m
- Easy mounting

Product features:
- Durably draw wire rotary position sensor with incremental or absolute rotary position sensor.

Applications:
- Crane industry
- Automated storage
- Fork lifts
- Injection molding machinery
- Scissor lifts
- Printing machinery

Mechanical characteristics:

Housing material:	Aluminium					
Wire material:	Stainless steel					
Type of connection:	depending on applied rotary position sensor					
Linearity:	±0.01 % full scale					
Measurement range		Wire-Ø	Length/	Weight	Max. Pull	Min. Pull
		[mm]	revolution [mm]	[kg]	out force [N]	in force [N]
	L = 2 m	0,8 mm	163,84	1,4	11,7	6,5
	L = 3 m	0,8 mm	260,09	1,5	6,9	4,0
	L = 5 m	0,8 mm	409,60	3,0 kg	13,4	8,7
	L = 8 m	0,8 mm	667,90	6,6 kg	10,7	7,5
	L = 15 m	0,5 mm	600,00	7,1	17,5	7,5

Dimensions: Measuring length L = 2 m or 3 m

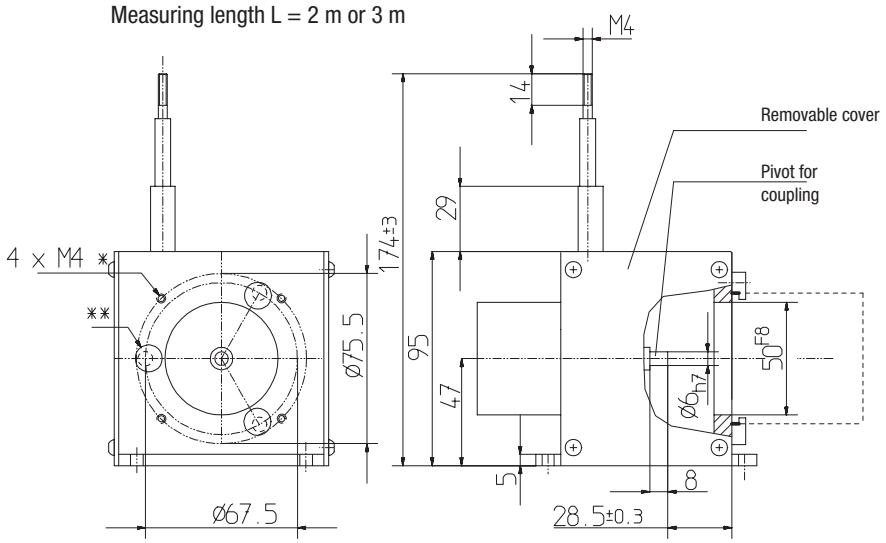

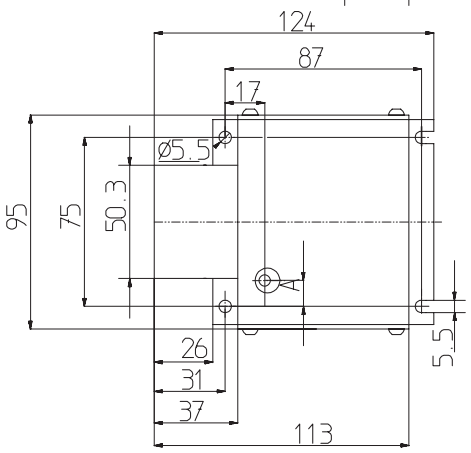

Dim A:	
Measuring length	A
2 m	11,5
3 m	0

**Accessory: Fastening eccentrics for rotary position sensors with synchronous flange Coupling must be ordered separately.

Accessories/Draw wire actuators

Dimensions:

Measuring length L = 5 m

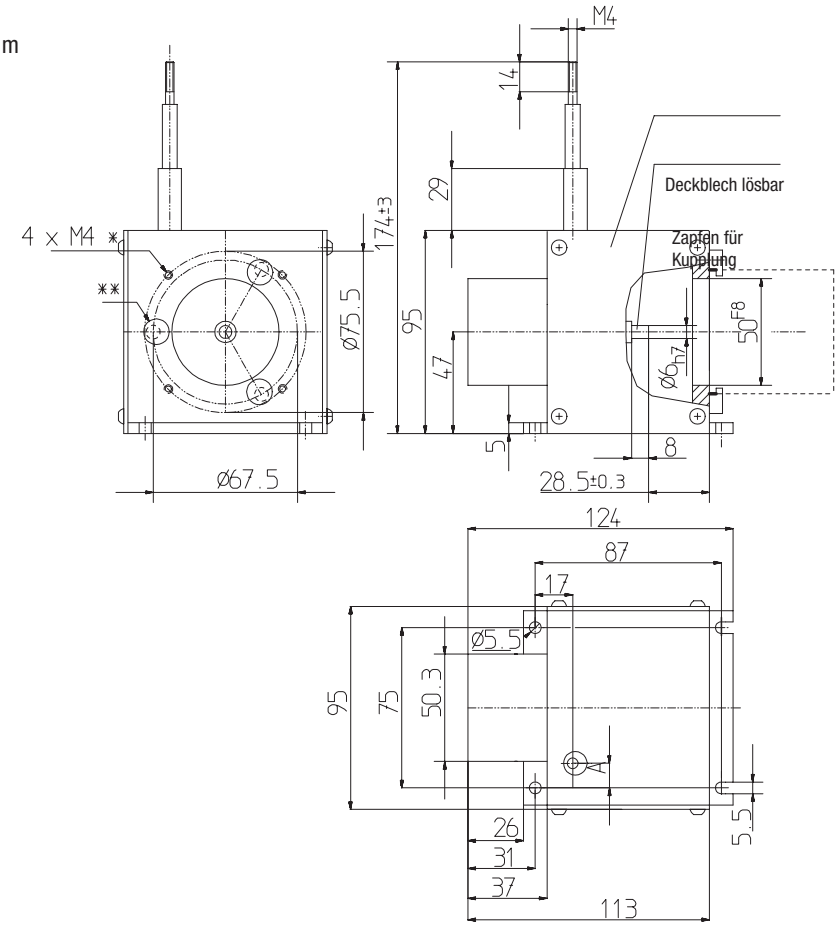

Measuring length L = 8 m

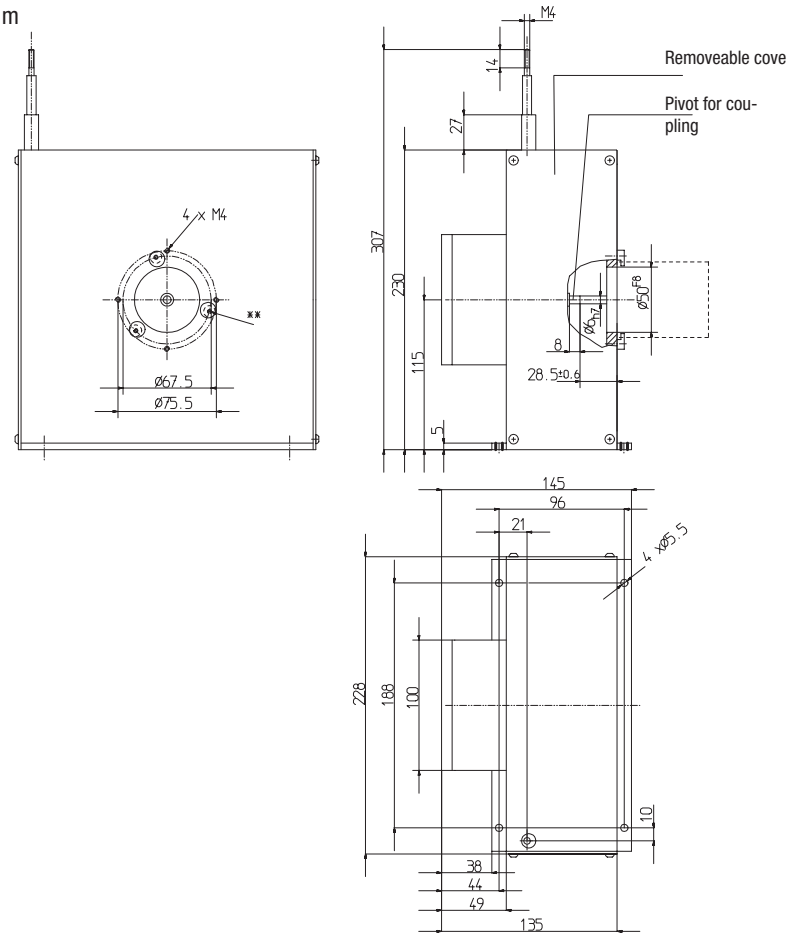

Order code:

T8.14XX.XXXX.XXXX

Draw wire actuator

Wire length
- 09 = 2 m
- 12 = 3 m
- 07 = 5 m
- 13 = 8 m
- 17 = 15 m

Encoder information*

Resolution/pulses/protokoll,
these data depends on the
choosen rotary position sensor*

Type of connection
these data depends on the
choosen rotary position sensor*

Output circuit
these data depends on the
choosen rotary position sensor*

Encoder*

00 = 58**00**	02 = 58**02**
04 = 58**04**	05 = 58**05**
10 = 58**10**	50 = 58**50**
52 = 58**52**	60 = 58**60**
61 = 58**61**	62 = 58**62**

*The type of rotary position sensor and the execution are specified.
The first two numbers describe the type of rotary position sensor e.g. 58**62**
The further characteristics of the rotary position sensor can be defined as per the actual encoder catalogue.

Order example:
Draw wire with wire length 8 m.
Absolute multiturn rotary position sensor 5862 with SSI interface, 5 ... 30 V DC voltage supply.

Encoder with radial plug and 25 bit gray code.

Order code:
D8.1413.6224.2004

- 25 bit Gray Code (12 x 13 Bit)
- Encoder 58**62**
  SSI 5 ... 30 V DC, radial plug M23, 12 pin plug
- Dataof the draw wire actuator

Order code for the draw wire actuator (without rotary position sensor):

T8.0000.7000.00XX

Type

Information to the rotary position sensors see rotary position sensor catalogue.

Measure length
- 07 = 5000 mm
- 09 = 2000 mm
- 12 = 3000 mm
- 13 = 8000 mm
- 17 = 15000 mm

If the draw wire rotary position sensor is ordered as a single part the following accessories for mounting are requiered

3 x Fastening eccentrics
Best.-Nr. T8.0010.4B00.0000

Bellow type couplings
Best.-Nr. T8.0000.1101.0606

Stock products
- T8.0000.7000.0009
- T8.0000.7000.0012
- T8.0000.7000.0013
- T8.0000.7000.0007
- T8.0000.7000.0017

Accessories/Software

General description of the software:
The software is a programming tool for all of TURCK's multi-turn rotary position sensors of the latest generation. These rotary position sensors are basically all programmable. The rotary position sensors are preset ex works with the default values given in the data sheet and the order key.
The purchase of a programming set allows customers to program any rotary position sensor. The customer can thus tailor the rotary position sensor's default settings to specific applications or use the software for diagnoses or as an information tool, for instance to make settings for a machine.
All of these configurations can be saved. The software is compatible upwards.

Functionality of the software

– Setting of the communication parameters
– RS232 interface rotary position sensor/PC
– Setting of a drive factor by means of the modification of the resolution per revolution, the number of revolutions and the total resolution
– Programming of the direction of rotation and the code type
– Setting of a preset/electronic zero point
– Setting of the parameters for devices with options:
  Output data format
  Limit switch values
  Limit switch enabling
  Number of bits
– Data transmission from the PC to the rotary position sensor and inversely, also during operation
– Print-out of the current data and the set parameters
– Comfortable position output with the current set data
– Output of the software/hardware version number
– Terminal operation for direct instructions via the keyboard
– Diagnostics of the rotary position sensor connected

Scope of delivery

Interface converter
Connection cable from the interface converter to the rotary position sensor
90 … 250 V AC power supply and CD-ROM
Order-code: 8.0010.9000.0004

Accessories/Connectors

- Large variety of connectors
- female or male
- 5 pin, 7 pin and 10 pin
- Connectors with MS
- Right angle plug

- **Note:**
  At page 149 you will find connectors complete with cables (PVC–, PUR– or TPE–cable) assembled.

Round connector:

Ord.-No.:
5 pin cable connector
female

Ord.-No.: T8.0000.5022.0000

Pole:

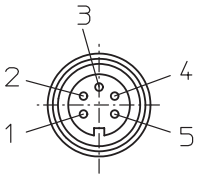

Dimensions:

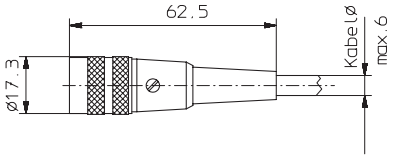

---

5 pin coupling
male

Ord.-No..: T8.0000.5025.0000

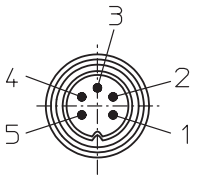

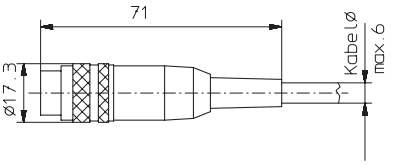

Cable connector 7 pin female

Ord.-No..: T8.0000.5052.0000

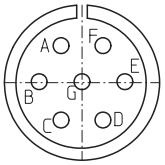

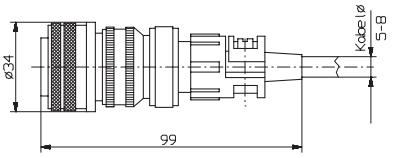

Cable connector 10 pin female

Ord.-No..: T8.0000.5062.0000

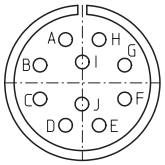

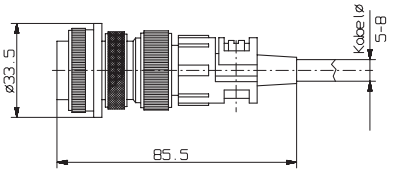

Right-angle plug:

Ord.-No.:
Right-angle plug
4 pin (acc. to DIN 43650 A)
includes central mounting screw
and flat gasket

Ord.-No. T8.0000.5032.0000

Dimensions:

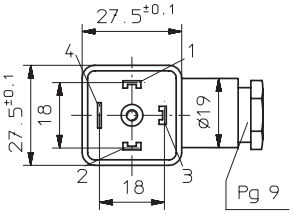

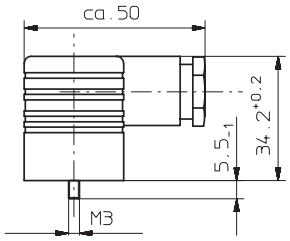

Accessories/Round connectors series M23x1 male

- Large variety of connectors
- 12- and 17-pin versions
- metal housing
- pin assignment cw or ccw
- **Note:**
  At page 149 you will find connectors complete with cables (PVC–, PUR– or TPE–cable) assembled.

Round connector:	Ord.-No.:	Pole:	Dimensions:
	12 pin plug connector pin assignment ccw Ord.-No.: T8.0000.5011.0000	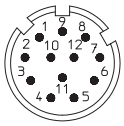	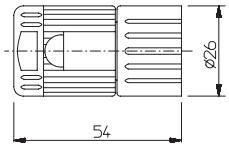
	12 pin plug connector pin assignment ccw Ord.-No.: T8.0000.5011.0001	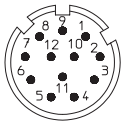	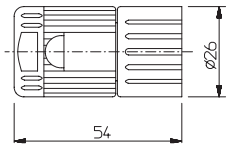
	12 pin plug coupling pin assignment ccw Ord.-No.: T8.0000.5015.0001	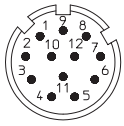	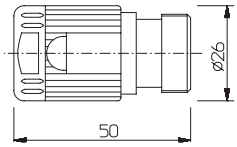
	12 pin plug coupling pin assignment ccw Ord.-No.: T8.0000.5015.0002	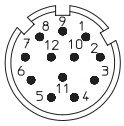	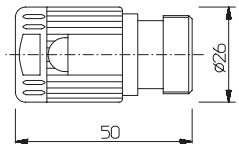
	12 pin coupling with central fixing pin assignment ccw Ord.-No.: T8.0000.5015.0000	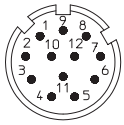	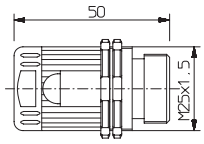
	12 pin coupling with central fixing pin assignment ccw Ord.-No.: T8.0000.5015.0003	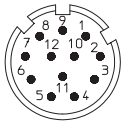	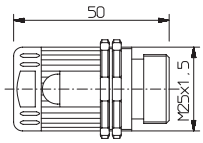
	72 pin coupling pin assignment ccw Ord.-No.: T8.0000.5041.0000	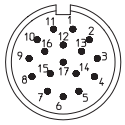	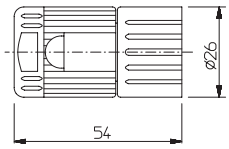

Accessories/Round connectors series M23x1 female

- Large variety of connectors
- 12- and 17-pin versions
- metal housing
- pin assignment cw or ccw
- **Note:**
  At page 149 you will find connectors complete with cables (PVC–, PUR– or TPE–cable) assembled..

Round connector:	**Ord.-No.:**	**Pole:**	**Dimensions:**
	12 pin plug connector pin assignment ccw Ord.-No.: T8.0000.5012.0000	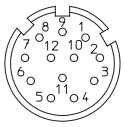	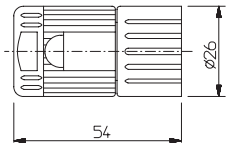
	12 pin plug connector pin assignment ccw Ord.-No.: T8.0000.5012.0001	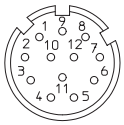	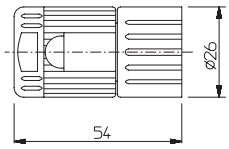
	12 pin plug connector pin assignment ccw Ord.-No.: T8.0000.5016.0000	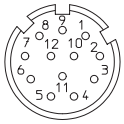	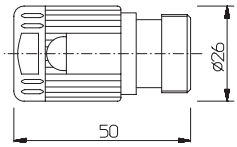
	12 pin plug connector pin assignment ccw Ord.-No.: T8.0000.5016.0001	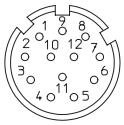	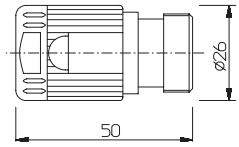
	17 pin plug connector pin assignment ccw Ord.-No.: T8.0000.5042.0000	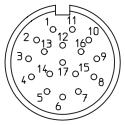	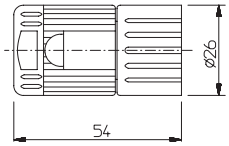
	17 pin plug connector pin assignment ccw Ord.-No.: T8.0000.5046.0000	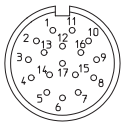	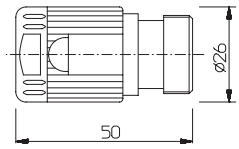

Accessories/Cable

Unprepared, cut to length

Description	PUR-electronic-trailing cable	PVC-electronic-cable LiYCY	PVC-electronic-cable LiYCY	PVC-electronic-cable LiYCY
Ord.-No.	8.0000.6100	8.0000.6200	8.0000.6300	8.0000.6400
Areas application and features:	highly flexible, weather proof, robust	Suitable for easy non critical	Suitable for easy non critical	Suitable for 1 channel rotary position sen-
sors				
	and generally more chemical resistant than PVC. Suitable for machine tool industry	applications	applications	with RS 422 interface
Number of conductors:	12cross + Shield	12cross + Shield	5cross + Shield	2 x 2cross + Shield
Cross section:	10 x 0.14 mm^2 + 2 x 0.5 mm^2	12 x 0.14 mm^2	5 x 0.14 mm^2	2 x 2 x 0.25 mm^2
Permanent working temp. range:				
Flexible installed:	–30 ... +70 °C	–5 ... +70 °C	–5 ... +70 °C	–5 ... +70 °C
Secure installed:	–50 ... +90 °C	–30 ... +70 °C	–30 ... +70 °C	–30 ... +80 °C
Bending radius:				
Flexible installed:	min. 70 mm	min. 100 mm	min. 75 mm	min. 75 mm
Secure installed:	min. 50 mm	min. 100 mm	min. 75 mm	
Cable-ø	appr. 6.9 ±0,2mm	appr. 6.9 ±0,2 mm	appr. 4.7 ±0,2 mm	appr. 6.5 ±0.2 mm

Description:	TPE-electronic-cable LIYCY (TP)	PVC-electronic-cable LiYCY (TP)	PVC-electronic-cable LiYCY	
Ord.-No.	8.0000.6E00	8.0000.6900	8.0000.6700	
Areas applications and features:	For Highly temperature or voltage Sine wave rotary position sensors	For current-sine wave twisted paired cond.	For absolute-rotary position sensors with rotary position sensors twisted paired conductors	parallel interface
Number of conductors:	12cross + Shield	12cross + Shield	cross + Shield	
Cross section:	5 x 2 x 0,14 mm^2+ 2 x 0,5 mm^2	6 x 2 x 0,14 mm^2	18 x 0,14 mm^2	
Permanent working temp. range				
Flexibly installed	–40° ... +110 °C	–-5° ... +70 °C	–40° ... +110 °C	
Securely installed	–60° ... +135 °C	–30° ... +70 °C	–60° ... +135 °C	
Bendings radius				
Flexibly installed	min. 90 mm	min. 110 mm	min. 100 mm	
Securely installed	min. 70 mm	min. 75 mm	min. 100 mm	
Cable-ø	appr. 8.5 ±0.4 mm	appr. 7.3 ±0,2mm	appr. 7.8 ±0.2mm	

Order code

T8.0000.6X00.XXXX

Type of cable

Length in meters
e.g (0025 => 25 m)
available lengths:
2, 3, 5, 8, 10, 15, 20, 25 and 30 m
other on request

Accessories/Cable plug combinations

- Easy connection to TURCK rotary position sensor
- Saves installation time
- Reduces the possibility of installation errors
- Ensures not to have a short cut - all cord sets are technically testet
- available lengths: 2, 3 ,5 8, 10, 15, 20, 25 and 30 m, other lenghts on request

Cable plug combinations for incremental rotary position sensors:

Suitable for rotary position sensors with push-pull output type series 5800, 5802, 5820, 5822, 9000
with 12 pin female

Ord.-No. T8.0000.6101.XXXX
(XXXX = length in m)

Connector type T8.0000.5012.0000 and cable type 8.0000.6100.XXXX
(PUR cable 10 x 0.14 mm^2 + 2 x 0.5 mm^2)

Suitable for rotary position sensors with push-pull output type series 5800, 5802, 5820, 5822, 9000
with 12 pin coupling

Ord.-No. T8.0000.6103.XXXX
(XXXX = length in m)

Connector type T8.0000.5016.0000 and cable type 8.0000.6100.XXXX
(PUR cable 10 x 0.14 mm^2 + 2 x 0.5 mm^2)

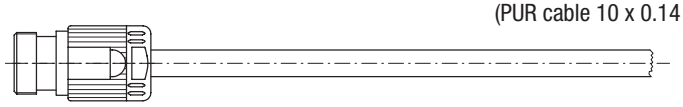

Suitable for rotary position sensors with push-pull output type series 5800, 5802, 5820, 5822, 9000
with 12 pin female plug

Ord.-No. T8.0000.6201.XXXX
(XXXX = length in m)

Connector type T8.0000.5012.0000 and cable type 8.0000.6200.XXXX PVC Cable 12 x 0.14 mm^2

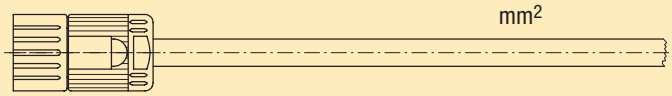

Suitable for rotary position sensors with push-pull output type series 5800, 5802, 5820, 5822, 9000
with 12 pin female plug

Ord.-No. T8.0000.6203.XXXX
(XXXX = length in m)

Connector type T8.0000.5016.0000 and cable type 8.0000.6200.XXXX
PVC cable 12 x 0.14 mm^2

Suitable for rotary position sensors with push-pull output type series 5810, 9010
with 5 pin female plug

Ord.-No. T8.0000.6311.XXXX
(XXXX = length in m)

Connector type T8.0000.5022.0000 and cable type 8.0000.6200.XXXX
PVC cable 5 x 0.14 mm^2

Suitable for rotary position sensor with RS 422 or voltage sine wave output type series 5800, 5802, 5803, 5804, 5820, 5822, 5853, 5824, 9000, A020
with 12 pin female plug

Ord.-No. T8.0000.6901.XXXX
(XXXX = length in m)

Connector type T8.0000.5012.0000 and cable type 8.0000.6900.XXXX
PVC Cable 6 x 2 x 0.14 mm^2

Accessories/Cable plug combinations

- Easy connection to TURCK rotary position sensor
- Saves installation time
- Reduces the possibility of installation errors
- Ensures not to have a short cut - all cord sets are technically testet
- available lengths: 2, 3 ,5 8, 10, 15, 20, 25 and 30 m, other lenghts on request

Cable plug combinations for incremental rotary position sensor:

Suitable for rotary position sensors with push-pull output type series 5800, 5802, 5820, 5822 and 9000
12 pin female plug connector and 12 pin male plug

Ord.-No. T8.0000.6102.XXXX
(XXXX = length in m)

PUR cable 10 x 0,14 mm^2 + 2 x 0,5 mm^2

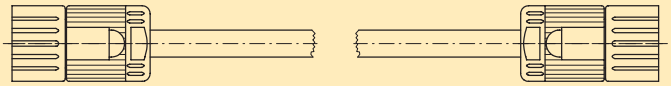

Suitable for rotary position sensors with push-pull output type series 5800, 5802, 5820, 5822 and 9000

12 pin female coupling and 12 pin male

Ord.-No. T8.0000.6104.XXXX
(XXXX = length in m)

PUR cable 10 x 0.14 mm^2 + 2 x 0.5 mm^2

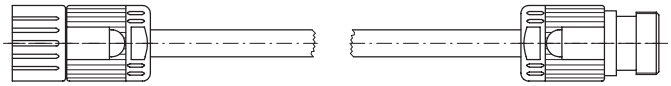

Suitable for rotary position sensors with push-pull output type series 5800, 5802, 5820, 5822 and 9000
12 pin female plug connector an 12 pin plug
Ord.-No. T8.0000.6202.XXXX

(XXXX = length in m)
PVC cable 12 x 0.14 mm^2

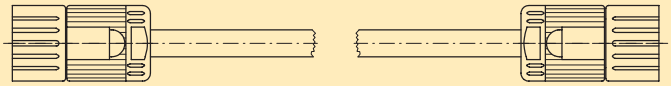

Suitable for rotary position sensors with push-pull output type series 5800, 5802, 5820, 5822 and 9000
12 pin female coupling and 12 pin male plug
Ord.-No. T8.0000.6204.XXXX

(XXXX = length in m)
PVC cable 12 x 0.14 mm^2

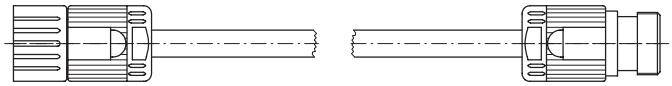

Suitable for rotary position sensors with push-pull output type series 5810, (no inverted signals)
5 pin female coupling and 5 pin male plug

Ord.-No. T8.0000.6315.XXXX

(XXXX = length in m)
PVC cable 5 x 0.14 mm^2

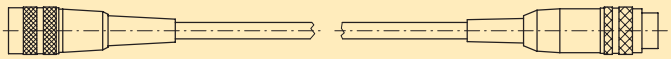

Suitable for rotary position sensors with RS 422 or voltage sine wave output type series 5800, 5802, 5803, 5804, 5820, 5822, 5853, 5824, 9000
12 pin female coupling and 12 pin male plug
Ord.-No. T8.0000.6904.XXXX

(XXXX = length in m)
PVC cable 6 x 2 x 0.14 mm^2

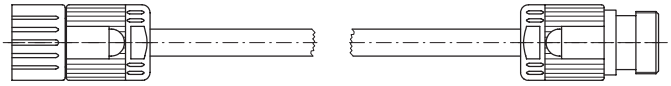

Accessories/Cable plug combinations

- Easy connection to TURCK rotary position sensor
- Saves installation time
- Reduces the possibility of installation errors
- Ensures not to have a short cut - all cord sets are technically testet
- available lengths are: 2, 3 ,5 8, 10, 15, 20, 25 and 30 m, other lenghts on request.

Cable plug combinations for incremental rotary position sensors:

Suitable for rotary position sensors with push-pull type series 5803 and 5823

12 pin male coupling and 12 pin female plug
Ord.-No. T8.0000.6905.XXXX

(XXXX = length in m)
PVC cable 6 x 2 x 0.14 mm^2

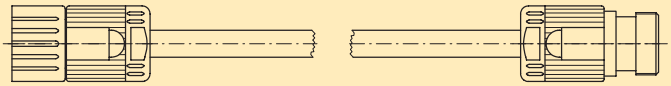

Suitable for rotary position sensors with push-pull type series 5803 and 5823

12 pin female coupling and 12 pin male plug
Ord.-No. T8.0000.6E04.XXXX

(XXXX = length in m)
TPE cable 5 x 2 x 0.14 mm^2 + 2 x 0.5 mm^2

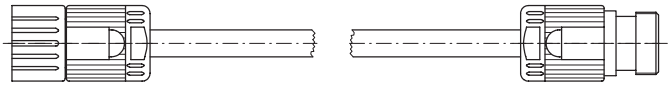

Cable plug combinations for absolute rotary position sensor

Suitable for rotary position sensors with push-pull type series 5803 and 5823

12 pin female coupling and 12 pin male plug
Ord.-No. T8.0000.6E04.XXXX

(XXXX = length in m)
TPE cable 5 x 2 x 0.14 mm^2 + 2 x 0.5 mm^2

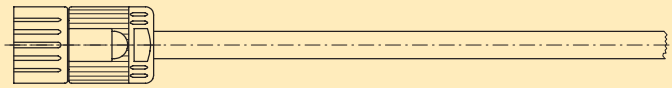

Suitable for rotary position sensors with SSI-output type series 5850, 5862, 5870, 5882, 9081 with 12 pin fermale plug

Ord.-No. T8.0000.6901.XXXX.0031
(XXXX = length in m)

Connector type T8.0000.5012.0000 and cable Type 8.0000.6900.XXXX PVC Cable 6 x 2 x 0.14 mm^2

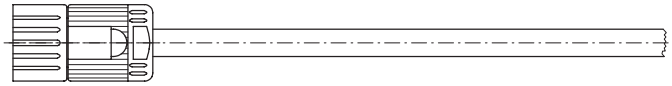

Suitable for rotary position sensors with SSI-output type series 5850, 5862, 5870, 5882, and 9081 with 12 pin male coupling and 12 pin female plug

Ord.-No. T8.0000.6905.XXXX.0032
(XXXX = length in m)

PVC cable 6 x 2 x 0.14 mm^2

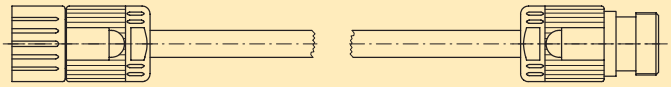

Suitable for encodes with SSI-output type series 5850, 5862, 5870, 5882 and 9081

Ord.-No. T8.0000.6902.XXXX.0034
(XXXX = length in m)

PVC cable 6 x 2 x 0.14 mm^2

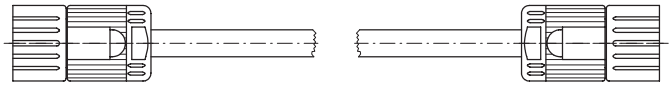

Accessories/Measuring wheels

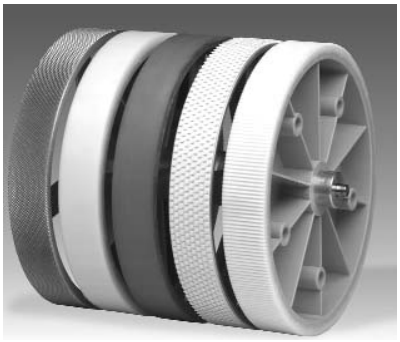

- Measuring wheels are utilized in combination with rotary position sensors to measure material in the wood-, paper, metal, textile and plastic industry.
- When selecting a measuring wheel, the first consideration is the type of material to be measured as this serves as the basis for determining the surface finish or coating of the measuring wheel.
- Different diameters to perfectly match with desired accurracy and pulses per revolution of your rotary position sensor.

Surface of the measured material:

Surface of the measured material:	Recommended profile no.
Plastic e.g. PVC, PE, ...)	4,.5
Paper	4, 5
Cardboard	1, 4, 5
Wood	1, 4, 5
Textile	6, 9, 1
Metals nacked	6
Varnished surfaces	6
Wire	5

Measuring wheels on stock:

8.0000.3211.0004	8.0000.3542.0010
8.0000.3211.0006	8.0000.3542.0012
8.0000.3211.0010	8.0000.3552.0010
8.0000.3241.0006	8.0000.3552.0012
8.0000.3211.0010	8.0000.3562.0007
8.0000.3291.0004	8.0000.3562.0010
8.0000.3291.0006	8.0000.3592.0006
8.0000.3291.0010	8.0000.3592.0010
8.0000.3512.0010	8.0000.3592.0012
8.0000.3542.0007	8.0000.3751.0010

Measuring wheels for metric system:

Measuring wheel	Profile	Coating	Coating hardness	Standard bore [mm][1)]	Measuring width [mm]	Material of wheel body	Weight (appr.) [g]	Wheel No.
0,2 m	1	diamond knurl		6	12	aluminium	40	211
	4	plastic (Hytrel), smooth	85 ... 90	6	12	plastic	35	241
	9	plastic (Hytrel), corrugated	85 ... 90	6	12	plastic	35	291
0,5 m	1	diamond knurl		10	25	aluminium	350	512
	4	plastic (Hytrel), smooth	85 ... 90	10	25	plastic	260	542
	5	plastic (Vulkolan), smooth	85 ... 90	10	25	aluminium	320	552
	6	tufted rubber		10	25	aluminium	320	562
	9	plastic (Hytrel), corrugated	85 ... 90	10	25	plastic	260	592

Measuring wheels for imperial system of measures:

Measuring wheel	Profile	Coating	Coating hardness	Standard bore [mm][1)]	Measuring width [mm]	Material of wheel body	Weight (appr.) [g]	Wheel No.
1 foot	1	diamond knurl		6	13	aluminium	110	711
(= 12”)	1	rubber smooth	70 ... 75	6	13	aluminium	100	751

[1)] other bore diameters on request

Please note:
If a measuring wheel is mounted directly on the shaft of a rotary rotary position sensor, the pressure force between the measuring wheel and measured material should not exceed the radial shaft load listed in the data sheet of the rotary position sensor. In addition, the measuring wheels can only be used for in-house purposes which are not subject to the stipulations of the German calibration code.

Order code

T8.0000.3XXX.00XX

Measuring wheel no. — bore diameter

Accessories/Flanges

- Suitable for shaft rotary position sensors with clamping flange
- Mounting screws included
- Material Aluminium

Square bracket:
Suitable for shaft rotary position sensors, series 58XX with clamping flange

Ord.-No.
T8.0010.2100.0000 (Kit)

Includes flange and screws for rotary position sensor mounting

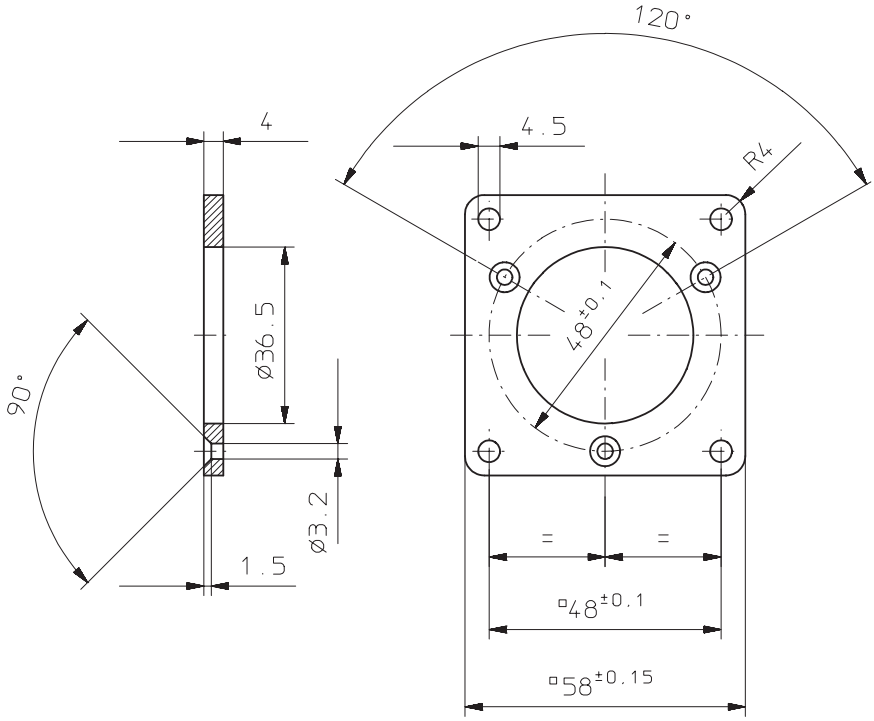

Square bracket:
Suitable for shaft rotary position sensors, series 58XX with clamping flange

Ord.-No.
T8.0010.2120.0000 (Kit)

Includes flange and screws for rotary position sensor mounting.

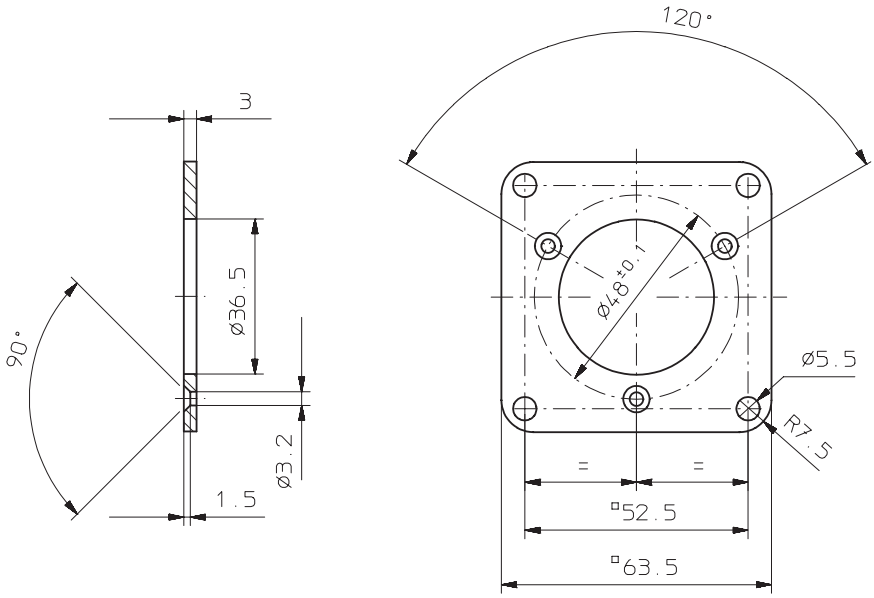

Accessories/Flanges

Square bracket:
Suitable for shaft rotary position sensors, series 58XX with clamping flange
Material: Aluminium

Ord.-No.
T8.0010.2600.0000 (Kit)

Includes flange and screws for rotary position sensor mounting.

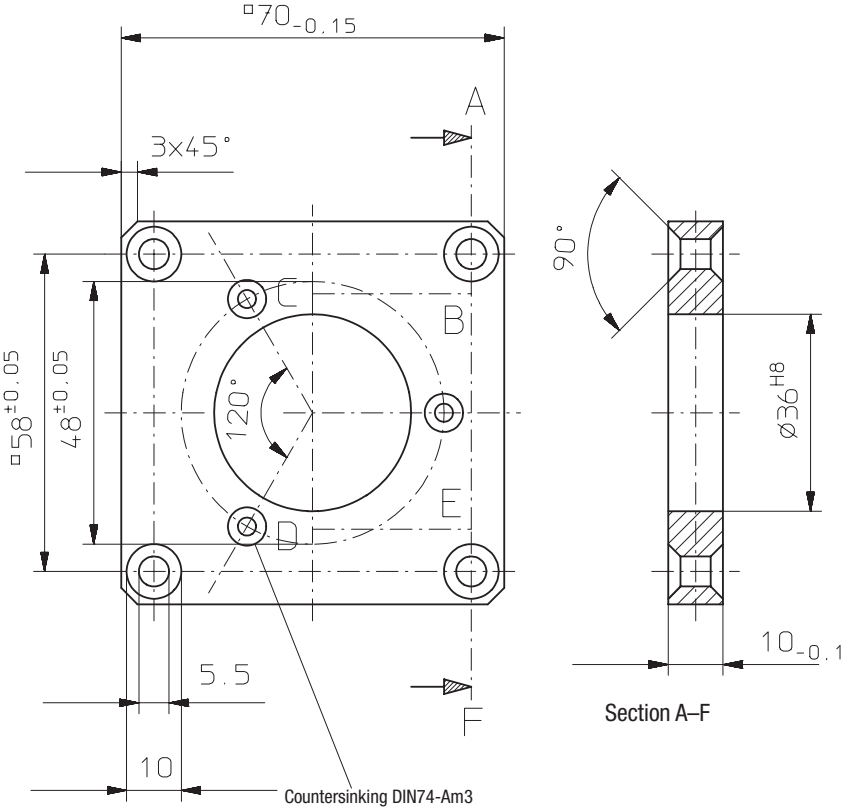

Square bracket:
Suitable for rotary position sensors, series 58XX.1XXX.XXXX
with clamping flange

Ord.-No.
T8.0010.2800.0000 (Kit)

Includes flange and screws for rotary position sensor mounting.

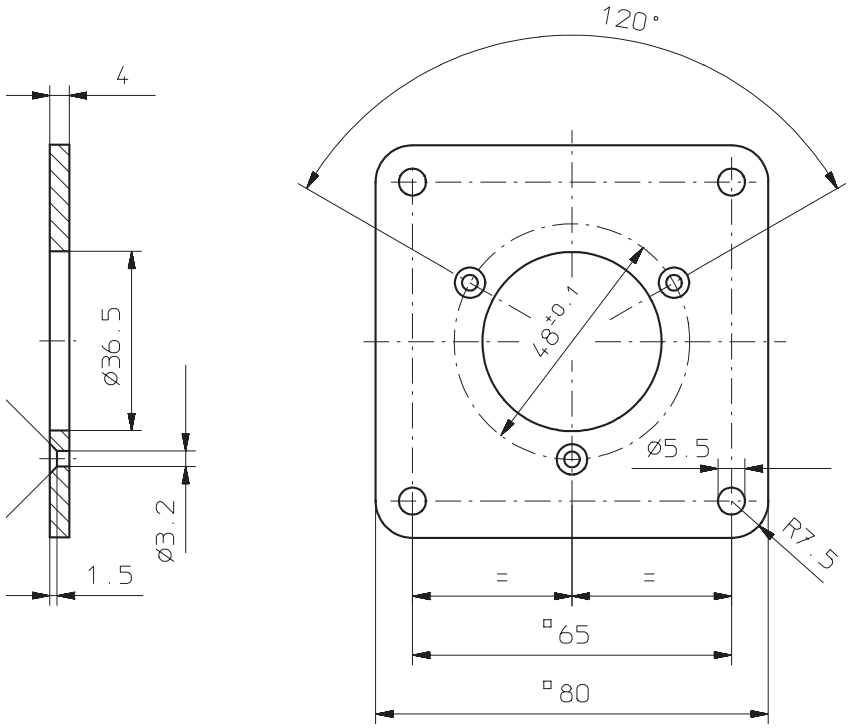

Accessories/Round flanges

- Suitable for TURCK rotary position sensors with clamping flange
- Includes flange and screws for rotary position sensor mounting.
- Material Aluminium

Round flange:
Suitable for shaft rotary position sensors, series 58XX with clamping flange

Ord.-No.
T8.0010.2200.0000 (Kit)

Includes flange and screws for rotary position sensor mounting.

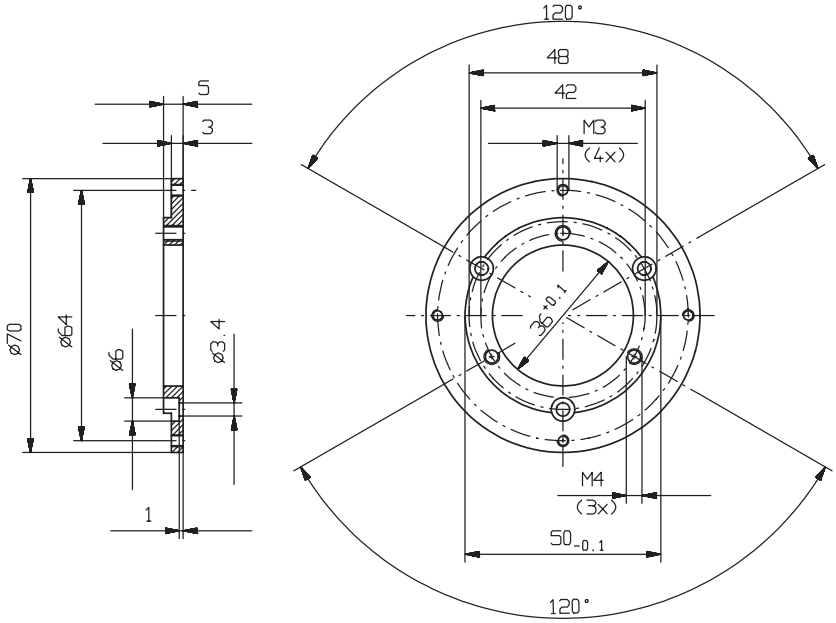

Round flange:
Suitable for shaft rotary position sensors, series 58XX with clamping flange

Ord.-No.
T8.0010.2500.0000 (Kit)

Includes flange and screws for rotary position sensor mounting.

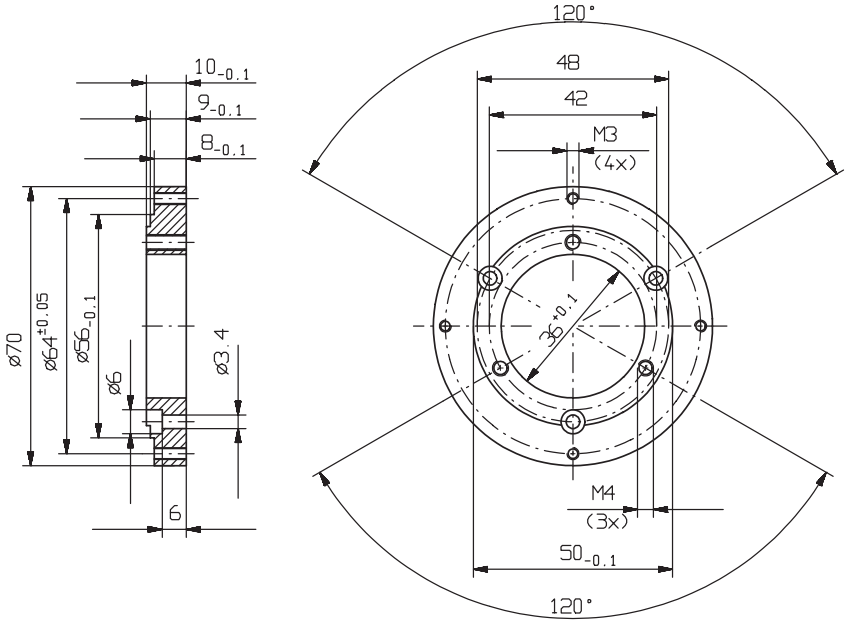

Accessories/Flanges

Round flange (Euro flange REO 444)::
Suitable for shaft rotary position sensors,
series 58XX
703X
9000

Material: AL

Ord.-No.
see table (Kit)

Includes flange and screws for rotary position sensor mounting.

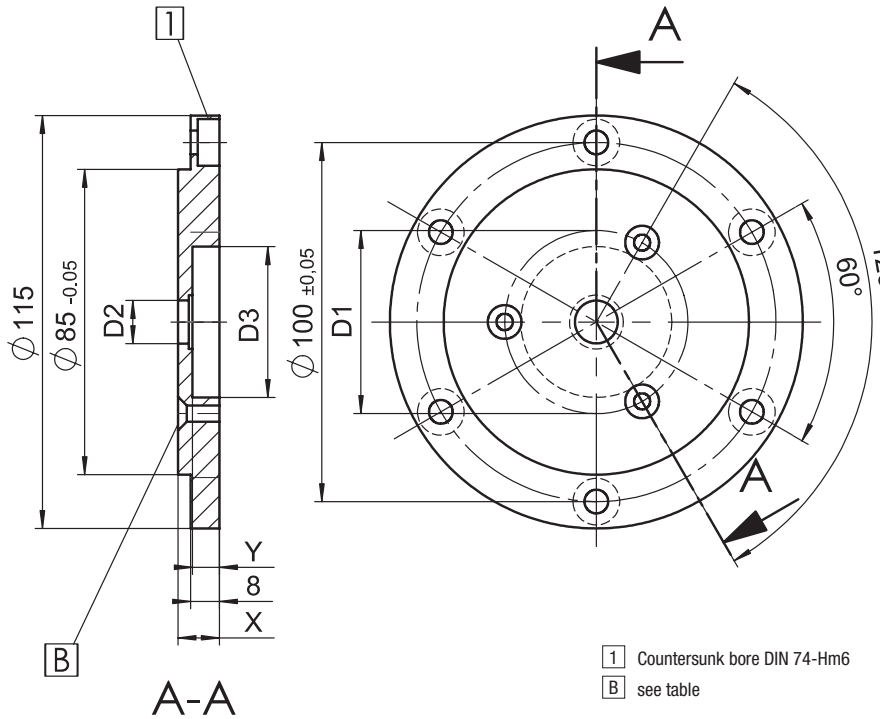

rotary position sensor type	Ord.-No.	D1	D2	D3	X	Y	B
58XX:	T8.0010.2160.0000	48	36	58	11	1	DIN 74-BM3
703XX	T8.0010.2170.0000	51	12	42	11.5	7.5	DIN 74-BM4
9000	T8.0010.2130.0000	60	40	90	11.5	6.5	DIN 74-BM6

Adapting-flange

for type series 58XX rotary position sensor
To mount rotary position sensor with clamping flange with the fastening eccentrics.

Includes flange and screws for rotary position sensor mounting.

Ord.-No. T8.0010.2180.0000 (Kit

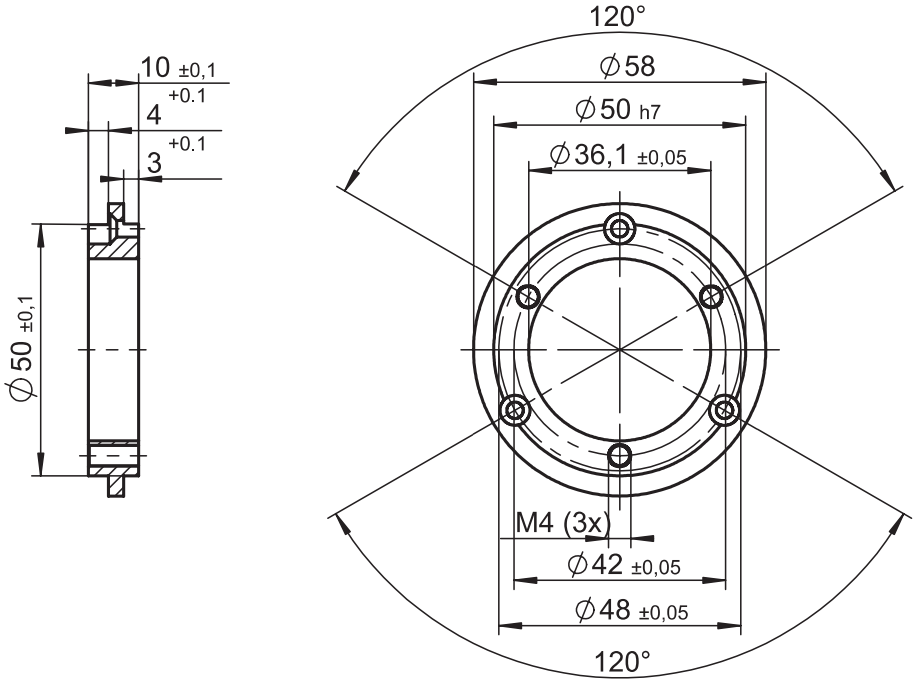

Accessories/Mounting attachment

Angular bracket:
Suitable for shaft rotary position sensors, series 58XX with clamping flange

Ord.-No.
T8.0010.2300.0000 (KIT)

Includes flange and screws for rotary position sensor mounting.

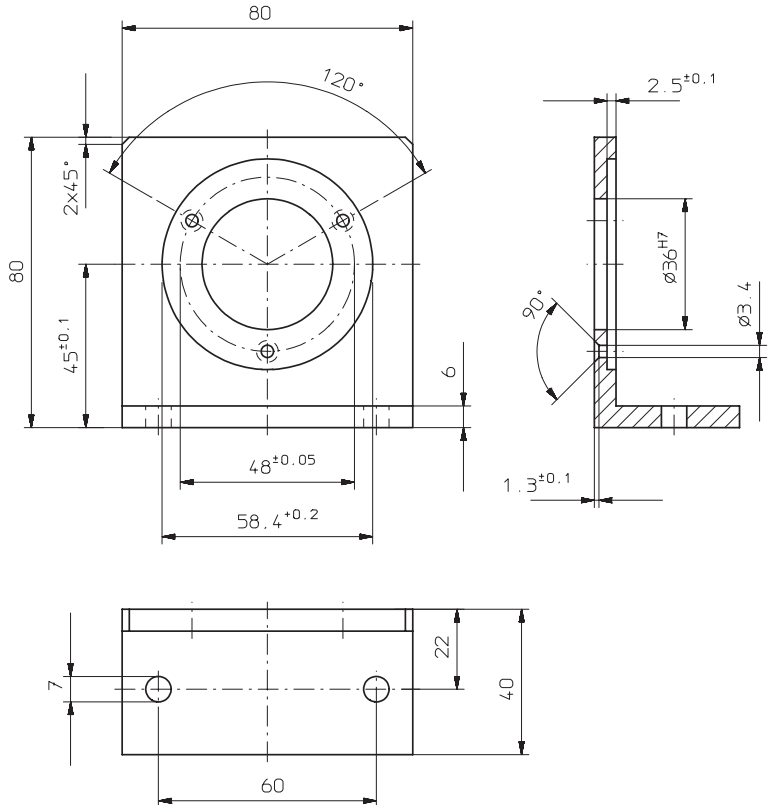

Angular flange:
Suitable for shaft rotary position sensor
T8.90XX.1XXX.XXXX
Material: Aluminium

Ord.-No.
T8.0010.2400.0000 (Kit)

Includes flange and screws for rotary position sensor mounting.

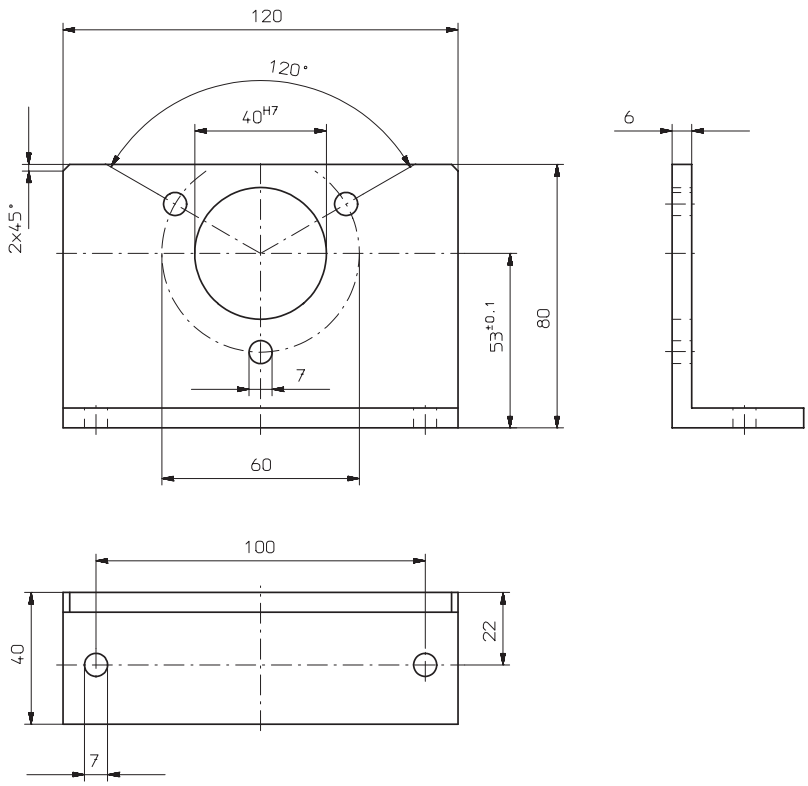

Accessories/Mounting attachment

- Fastening eccentrics for rotary rotary position sensors with synchronous flange
- included screws
- Material: ACu Zn 39 Pb 3
- Surface finish: galvanized Ni

Fastening eccentrics for shaft rotary position sensors with synchronous flange:
Note:
Use at least three fastening eccentrics to mount the rotary position sensor.

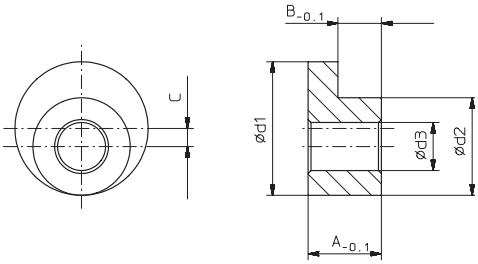

Example:

Dimensions table

d_1	d_2	d_3	A	B	C	for rotary position sensor	Ord.-No.
6.8	5	2.8	3.5	2.25	0.9	8.3600.1XXX.XXXX	T8.0010.4200.0000
8.9	6.5	3.2	5.6	2.9	1.2	8.58XX.2XXX.XXXX	T8.0010.4100.0000
14	9	5,3	10	4.9	2.5	8.90X0.1XXX.XXXX	T8.0010.4300.0000

Accessories/Mounting attachment

- Stator coupling for hollow shaft rotary position sensors, series 582X or 587X
- Mounting kit for hollow shaft rotary position sensor

Stator coupling for hollow shaft rotary position sensors:
For hollow shaft rotary position sensors, series 582X, 587X or 588X

Ord.-No.T8.0010.1601.0000

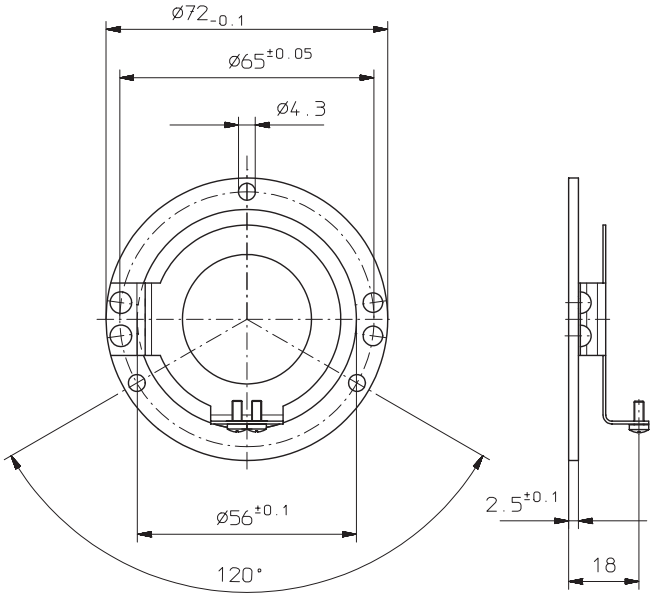

Flexible mounting braket for hollow shaft rotary position sensors, series 582X or 587X:

Delivery includes:
1 x flexible mounting sheet
3 x washer
3 x screw M3x6

Ord.-No. T8.0010.4800.0000

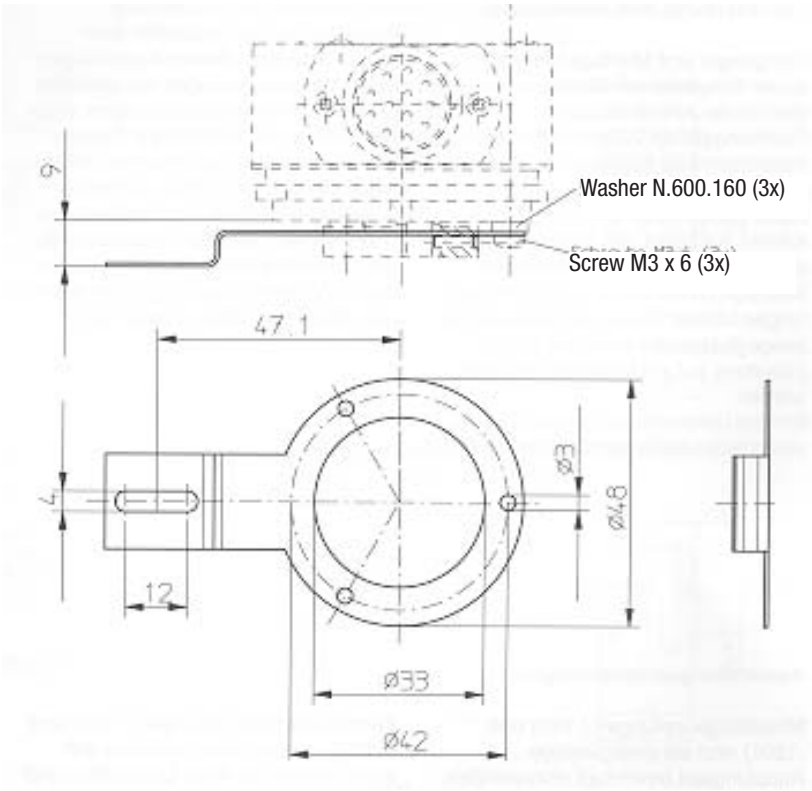

Accessories/Mounting attachment

Mounting kit for hollow shaft rotary position sensor ø 58 mm:

Various mounting variations canbe supplied

Delivery includes:

1 x cylindric pin with thread
Ord.-No. T8.0010.4700.0000

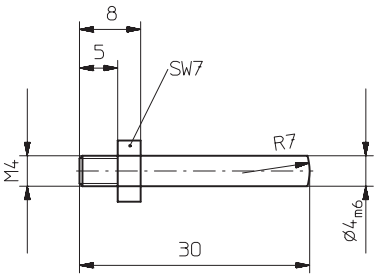

1 x mounting bracket
Art.-no. T.035.009
incl. screw M3x5
Ord.-No. N.630.305

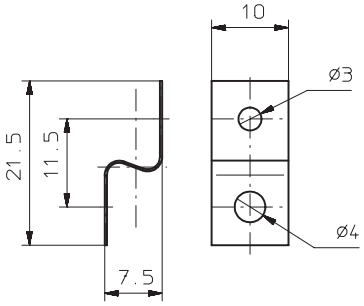

1 x long torque support slot
Ord.-No. T.051.672

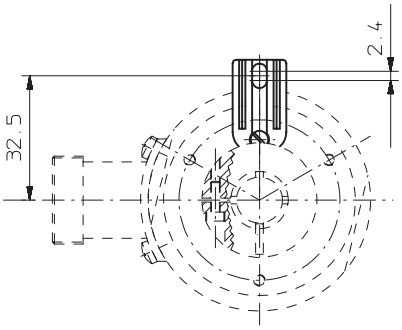

Complete set:
Ord.-No. T8.0010.4600.0000

Mounting kit for large hollow shaft rotary position sensor

Various mounting variations can be supplied

Suitable for rotary position sensors type A020 and 908X

Complete kit
Order-No. 8.0010.4A00.0000

Kit includes:

1 x cylindric pin long with thread
Order-No. T8.0010.4700.0003

1 x spring long
Order-No. T.030.795

1 x spring short
Order-No. T.030.794

3x screw M2,5
Order-No. N 630 049

screw M4 x 10
Order-No. N 630 390

bracket
Order No. T035.010

washer
Order-No. N.600.014

1 x cylindric pin long with thread
Order-No. T8.0010.4700.0003

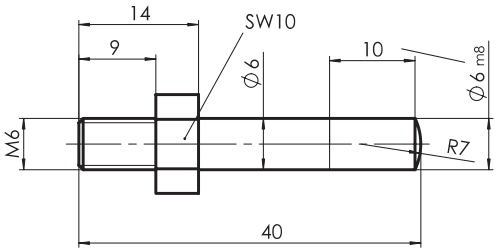

1 x spring long
Order-No. T.030.795

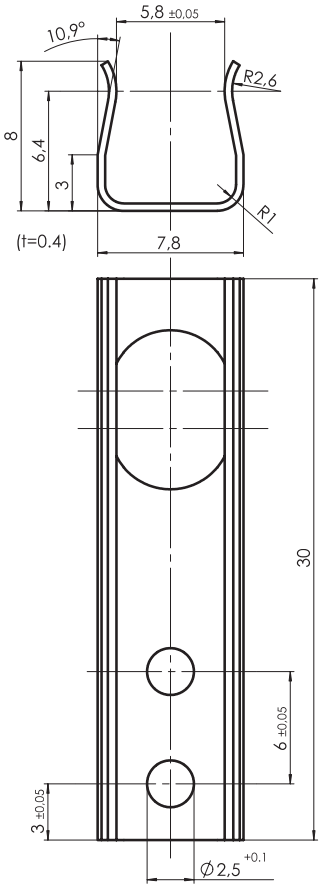

1 x spring short
Order-No. T.030.794

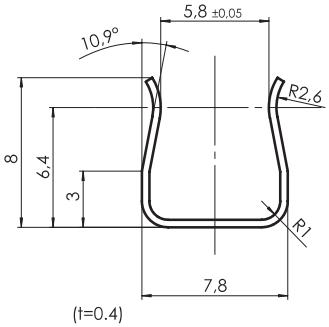

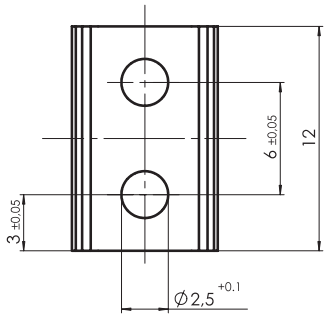

bracket
Order No. T035.010

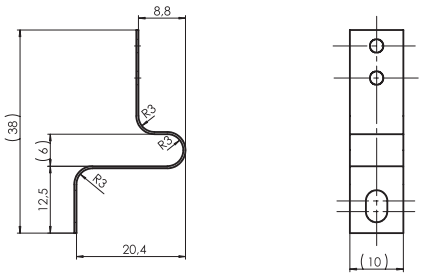

Accessories/Couplings

- Bellow type couplings are recommended as an inexpensive type of coupling
- they are also suitable to compensate larger angular displacements
- Spring washer type for couplings for high speed applications
- Easy to mount, two parts

Descriptions and applications

Manufacturing and installation tolerances as well as the effects of temperature cause alignment errors between shafts in drive engineering which can sometimes lead to extreme overload on the bearings.
This may result in increased wear of the bearings and may lead to premature failure of the rotary position sensor. By using couplings these alignment errors can be compensated, thereby reducing the load on the bearings to a minimum. A distinction should be made between three different kinds of alignment error: radial, angular and axial displacement.
Whilst with torsion-free but bendable shaft couplings, axial shaft displacements produce only static forces in the coupling, radial and angular displacements produce alternating stresses, restoring forces and moments which may have an impact on adjoining components (shaft bearings). Depending on the type of coupling, particular attention should be paid to radial shaft displacement which should be kept to a minimum.

Areas of application:

Metal bellows-type couplings (.1101 and 1201) are recommended as an inexpensive type of coupling. They are also suitable for compensating larger angle displacements.
Spring washer-type couplings (.1300 and .1401) are used mainly in those cases where high speeds and smaller angle displacements are involved. For applications where electrical insulation between rotary rotary position sensor and drive is required, the electrically insulating spring whasher-type coupling should be used.

Installation instructions:

1. Check shaft for displacement; See technical data for details
2. Align and adjust coupling on shafts.

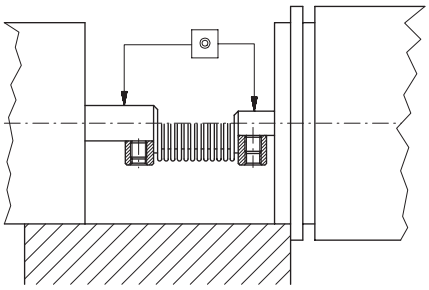

3. Tighten locking screws carefully. Avoid overtightening.
4. During installation protect the coupling from damage and from overbending.

Technical data

Type		1101.XXXX	1201.XXXX	1300.XXXX	1401.XXXX	1501.XXXX
max. speed	min^{-1}	12000	12000	12000	12000	12000
max. torque	Ncm	150	50	20	80	200
max. radial displacement	mm	± 0.2	± 0.2	± 0.4	± 0.4	± 0.2
max. angele displacement	Grad	± 1.5	± 1.5	± 2	± 3	± 1.5
max. axial displacement	mm	± 0.7	± 0.5	± 0.4	0.4	± 0.6
Torsion spring parameter	Ncm/Grad	700	210	265	55	1300
Moment of inertia	gcm^2	5,5	1,2	25	19	18
Weight appr.	g	14	6	23	14,5	24
Material: Flange		Al	Al	Al cu Mg Pb	Zinkdruckguß	Al
Bellow or spring washer/casing		Estainless steel	stainless steel	Cu Sn 6 Vern.	PA 6,6 20% gf	stainless steel
Diameter d/d1 from ... to	mm	3...12	3...9	3...8	4...10	3...16
max. tightening torque of locking screws	Ncm	150	70	80	80	180
Standard bore diameter	mm	12/12 12/10 10/10 6/6	8/6 6/6 6/4 4/4	6/6 6/4	10/10 12/10 10/10 10/6 6/6 3/8”/10 3/8”/6 1/4”/10 1/4”/6	15/12 14/12 14/10

Bellows-type coupling
Ord.-No. T8.0000.1501.XXXX

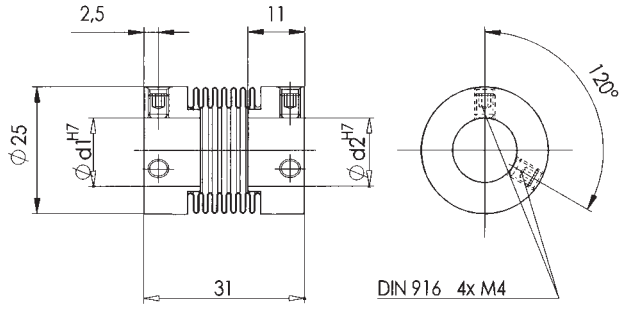

Spring washer coupling
Ord.-No. T8.0000.1300.XXXX

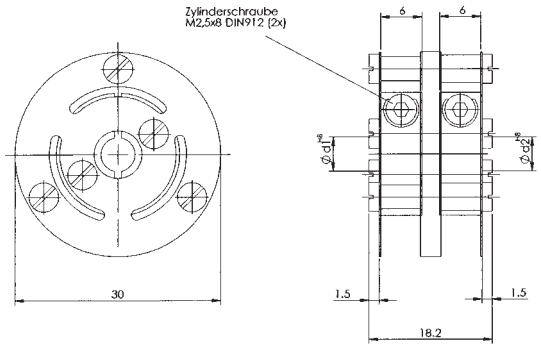

Bellows-type coupling
Ord.No. T8.0000.1101.XXXX

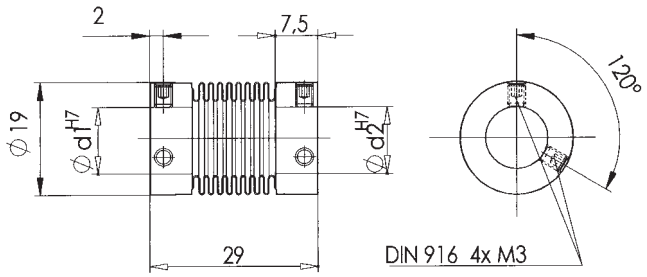

Spring washer coupling
Ord.-No. T8.0000.1401.XXXX

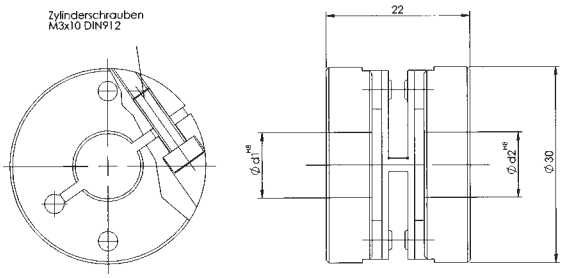

Bellows-type coupling
Ord.-No.. T8.0000.1201.XXXX

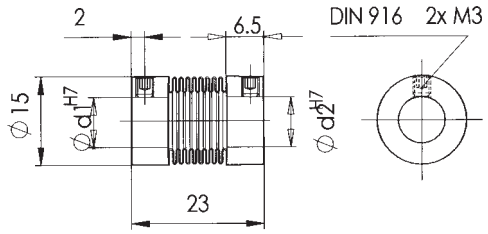

Order code

T8.0000.1X01.XXXX

Type of coupling
- 1 Bellows-type ø 19 mm
- 2 Bellows-type ø 15 mm
- 3 Spring washer type
- 4 Spring washer type*
- 5 Bellows-type ø 25 mm

* electronically insulated

Bore diameter d_2

Bore diameter d_1
e.g.: d_1 = 10 mm and d = 12 mm
=> XXXX.XXXX.101[2)]
for the bore diameter
d_1 = 3/8" Code = A1
d_1 = 1/4" Code = A2

Example: Coupling type 1401:
d_1 = 3/8" and d = 10 mm:
Order-Code = 1401.A110

Accessories/Displacement measuring device

- complete measuring system as kit or as single parts
- holding device for rotary position sensor for perfect pressure
- with rack and pinion
- 1 turn around of the pinion is exact 50 mm easy to use

Description and application:
The holding device for the rotary position sensor (8.0010.7000.0004) is a movable support for rotary position sensors, to the shaft of which, for instance, a measuring wheel or pinion can be attached. Due to the fact that it is movable, optimum contact pressure is ensured and overload on the bearings of the rotary position sensor prevented.
When used in conjunction with a pulse generating unit, the rack and pinion combination (8.0010.7000.0001 and ...0002) serves as a simple length and displacement measuring system. One rotation of the pinion on the rack corresponds to a displacement of 50 mm. Moreover the racks are designed in such a way that they can be butt-mounted without pitch error.
Measuring inaccuracy is 0.1 mm over 1 m length of rack.
Holding device, rack and pinion are available as a set for the purpose of displacement measurement (8.0010.7000.0005).

The installation aid (8.0010.7000.0003) is required to maintain exact pitch when buttmounting racks.

Typical areas of application are:
- Wood working industry
- Textile industry
- Handling and automation technology
- Mechanical engineering / Special machines

Holding device for rotary position sensors:
Material:
Guide rods: stainless steel
Flange: Al

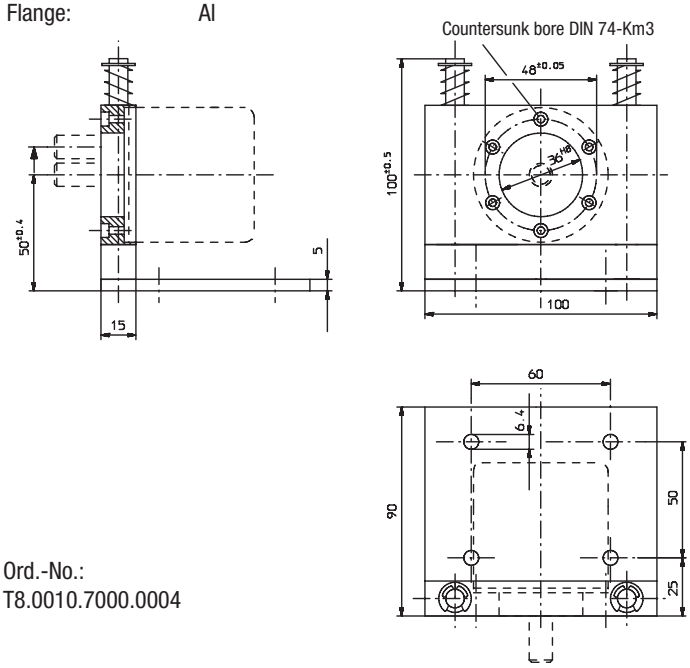

Ord.-No.:
T8.0010.7000.0004

Pinion
Material: free-cutting steel
Surface: burnished
Module pitch: appr. 1
No of teeth: 16

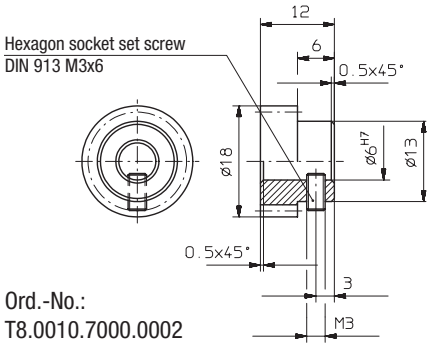

Ord.-No.:
T8.0010.7000.0002

Installation aid
Material: St 37
Surface: uncoated
Module pitch: appr. 1

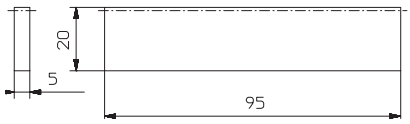

Ord.-No.:
T8.0010.7000.0003

Rack:
Material: St 37
Surface: uncoated
Module pitch: appr. 1

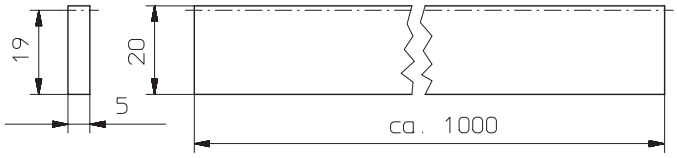

Ord.-No.:
T8.0010.7000.0001

Accessories/Assembly bell

- Easy and quick rotary position sensor mounting
- electrically and thermally insulation: because of fibre.glass plastic
- complete delivery (set)

Kit includes:
- Assembly bell
- Spring washer type coupling Ord.-No. 8.0000.1401.XXXX
- 4 x hexagon socket head cap screws DIN 912 M 4 x 12
- 3 x hexagon socket head cap screws DIN 912 M 4 x 10
- 7 x washer DIN 433 Ø4
- 3 x fastening eccentrics 8.0000.4B00.0000
- 3 x hexagon head screws DIN 84 M 4 x 35
- 3 x hexagon nuts DIN 934 - M4

Example:

Mounting example:

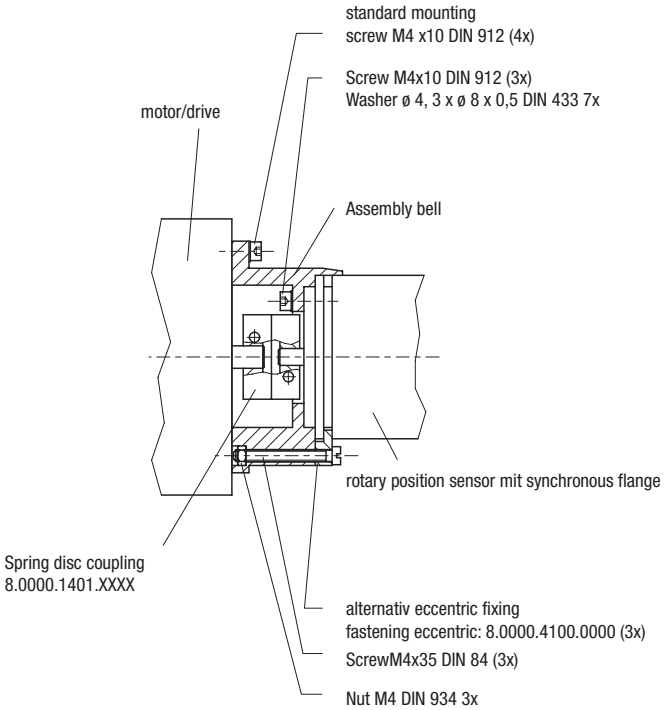

Dimensions:

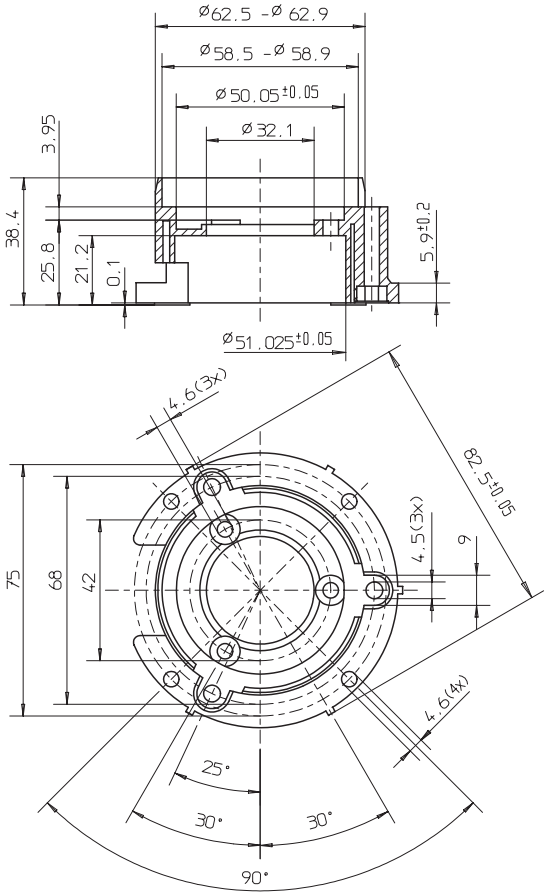

Order code:

T8.0000.4500.XXXX

- Bore diameter of coupling d_1 in mm
- Bore diamter of coupling d_2 in mm

Accessories/Bearing box

Description:
In applications where the rotary position sensor is driven by use of gears, chains, belts etc. and the permitted axial and radial shaft loads are exceeded, we recommend the use of the special designed bearing box which has stronger bearings.

It can be combined with all rotary position sensors of the type series 58XX with clamping flange and shaft ø10 x 20 mm..

Technical data:

Suitable for rotary position sensors, series 580X,
585X and 5810 with clamping flange and shaft Ø10 x 20 mm.

Shaft load	axial: 150 N
	radial: 250 N
Lifetime of bearings:	50.000 h
Protection:	IP65
max. speed:	4000 min^{-1}

Kits includes:
- Bearing box with lock cover and sealing
- Coupling for shaft Ø 10
- Flange adapter 8.0010.2100.0000
- 3 x countersunk head screws DIN 63 M 3 x 8
- 4 x slotted cheese head screws DIN 84 M 4 x 8

Dimensions:

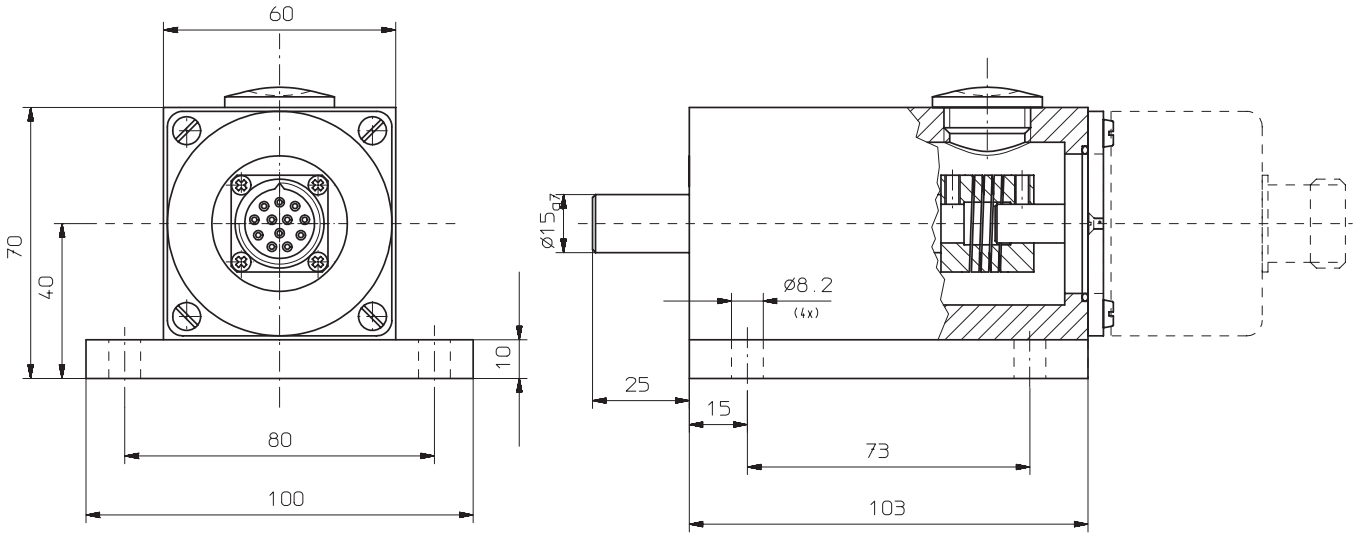

Ord.-No.:
T8.0010.8200.0004

Bitte senden Sie mir Unterlagen:

Sensortechnik
- ❑ Induktive Sensoren
- ❑ Induktive Sensoren für Schwenkantriebe
- ❑ *uprox*® induktive Sensoren
- ❑ Kapazitive Sensoren
- ❑ Magnetfeldsensoren
- ❑ Opto-Sensoren
- ❑ Geräte für den Personenschutz
- ❑ Ultraschall-Sensoren
- ❑ *levelprox*-Füllstandssensoren
- ❑ Strömungswächter
- ❑ Druckwächter
- ❑ Temperaturwächter
- ❑ Linearweg-Sensoren
- ❑ Drehweg-Sensoren
- ❑ Steckverbinder
- ❑ CD-ROM Sensortechnik

Interfacetechnik
- ❑ Interfacetechnik im Aufbaugehäuse
  - – Bauform *multimodul*
  - – Bauform *multisafe*®

  Allgemeine Informationen
- ❑ Interfacetechnik auf 19"-Karte
  - – Bauform *multicart*®
- ❑ Miniaturrelais, Industrierelais, Zeitwürfel, Sockel
- ❑ Zeit- und Überwachungsrelais
- ❑ Ex-Schutz – Grundlagen für die Praxis (Übersichtsposter)
- ❑ CD-ROM Interfacetechnik

Feldbustechnik
- ❑ *busstop*®-Feldbuskomponenten
- ❑ Bussystem *sensoplex*®*2*
- ❑ Bussystem *sensoplex*®*2Ex*
- ❑ Bussystem *sensoplex*®*MC*
- ❑ Bussystem AS-Interface®
- ❑ Bussystem DeviceNet™
- ❑ Ethernet Netzwerkkomponenten
- ❑ BL20 I/O-Busklemmensystem
- ❑ Bussystem FOUNDATION™ fieldbus
- ❑ Bussystem PROFIBUS-DP
- ❑ Bussystem PROFIBUS-PA
- ❑ Bussystem *piconet*®
- ❑ Bussystem *excom*®
- ❑ .....

Please send me more information:

Sensors
- ❑ inductive sensors
- ❑ inductive sensors for rotary actuators
- ❑ *uprox*® inductive sensors
- ❑ capacitive sensors
- ❑ magnetic-field sensors
- ❑ photoelectric sensors
- ❑ machine safety equipment
- ❑ ultrasonic sensors
- ❑ *levelprox* level sensors
- ❑ flow controls
- ❑ pressure controls
- ❑ temperature controls
- ❑ linear position sensors
- ❑ rotary position sensors
- ❑ connectors
- ❑ CD-ROM Sensors

Interface technology
- ❑ devices in modular housings
  - – *multimodul* style
  - – *multisafe*® style

  general information
- ❑ devices on 19" card
  - – *multicart*® style
- ❑ miniature relays, industrial relays, time cubes, sockets
- ❑ programmable relays and timers
- ❑ explosion protection – basics for practical application (overview poster)
- ❑ CD-ROM Interface technology

Fieldbus technology
- ❑ *busstop*® fieldbus components
- ❑ bus system *sensoplex*®*2*
- ❑ bus system *sensoplex*®*2Ex*
- ❑ bus system *sensoplex*®*MC*
- ❑ bus system AS-Interface®
- ❑ bus system DeviceNet™
- ❑ Ethernet network components
- ❑ BL20 I/O bus terminal system
- ❑ bus system FOUNDATION™ fieldbus
- ❑ bus system PROFIBUS-DP
- ❑ bus system PROFIBUS-PA
- ❑ bus system *piconet*®
- ❑ bus system *excom*®
- ❑ .....

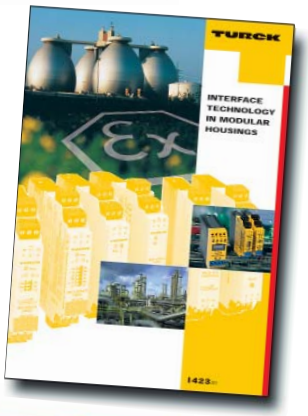

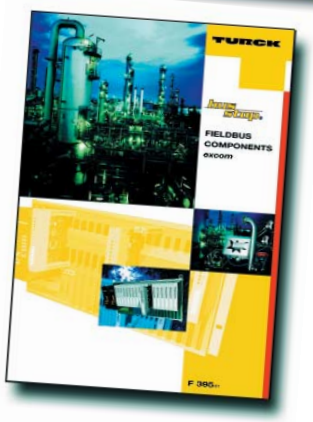

FAX-ANTWORT/FAX REPLY

Absender/Sender:

Name:

Firma/Company:

Abt./Position:

Adresse/Address:

Tel./Phone: Fax:

E-Mail:

Hans Turck GmbH & Co. KG
D-45466 Mülheim an der Ruhr
Tel. (+49) (2 08) 49 52-0
Fax (+49) (2 08) 49 52-2 64
E-Mail turckmh@mail.turck-globe.de
Internet www.turck.com

TURCK

Sensortechnik
Automatisierungstechnik

TURCK WORLD-WIDE HEADQUARTERS

GERMANY
Hans Turck GmbH & Co. KG
Witzlebenstraße 7
D-45472 Mülheim an der Ruhr
P. O. Box 45466 Mülheim an der Ruhr
Phone (+49) (208) 4952-0
Fax (+49) (208) 4952-264
E-Mail turckmh@mail.turck-globe.de

BELGIUM
Multiprox N. V.
P. B. 71
Lion d'Orweg 12
B-9300 Aalst
Phone (+32) (53) 766566
Fax (+32) (53) 783977
E-Mail mail@multiprox.be

BRAZIL
TURCK Ltda.
Rua Apucarana 134
BR-83324-040 Pinhais
Phone (+55) (41) 6682053
Fax (+55) (41) 6681794
E-Mail turck@turck.com.br

CZECH REPUBLIC
TURCK s.r.o.
Hradecká 1151
CZ-500 03 Hradec Králové 3
Phone (+ 420) (49) 5 51 85 66
Fax (+ 420) (49) 5 51 85 67
E-Mail turck@turck.cz

PR OF CHINA
TURCK (Tianjin) Sensor Co. Ltd.
40, Yibin Road/Nankai District
TJ-300113 Tianjin
Phone (+86) (22) 27623140
Fax (+86) (22) 27614650
E-Mail turcktj@public1.tpt.tj.cn

EASTERN EUROPE / ASIA
Hans Turck GmbH & Co. KG
Am Bockwald 2
D-08340 Beierfeld
Phone (+49) (3774) 1 35-0
Fax (+49) (3774) 1 35-2 22

FRANCE
TURCK BANNER S.A.S
3, Rue de Courtalin
Magny-Le-Hongre
F-77703 Marne-La-Vallee Cedex 4
Phone (+33) (1) 60436070
Fax (+33) (1) 60431018
E-Mail info@turckbanner.fr

GREAT BRITAIN
TURCK BANNER LIMITED
Stephenson Road
GB-Leigh-on-Sea, Essex SS9 5LS
Phone (+44) (1702) 525186
Fax (+44) (1702) 420934
E-Mail info@turckbanner.co.uk

HUNGARY
TURCK Hungary kft.
Könyves Kalman Krt.76
H-1087. Budapest
Phone (+36) (1) 4770740
Fax (+36) (1) 4770741
E-Mail turck@turck.hu

ITALY
TURCK BANNER S. R. L.
Via Adamello, 9
I-20010 Bareggio (MI)
Phone (+39) (02) 90364291
Fax (+39) (02) 90364838
E-Mail info@turckbanner.it

KOREA
Turck Korea Branch Office
Sangwoo Building 4th Floor, 1576-1
Jeongwang-Dong, Shiheung-City
ROK-Kyunggi-do, Korea
Phone (+82) (31) 4988433
Fax (+82) (31) 4988436
E-Mail sensor@sensor.co.kr

THE NETHERLANDS
TURCK B. V.
Postbus 297
NL-8000 AG Zwolle
Phone (+31) (38) 4227750
Fax (+31) (38) 4227451
E-Mail info@turck.nl

POLAND
Turck sp.z o.o
ul. Kepska 2
PL-45-129 Opole
Phone (+48) (77) 4434800
Fax (+48) (77) 4434801
E-Mail turck@turck.pl

RUSSIA
TURCK Avtomatizazija O.O.O
2-ojWerchne-Michajlovskij proesd, 9
RU-117419 Moskau
Phone (+7) (095) 9520820
Fax (+7) (095) 9557348
E-Mail turck@turck.ru

USA
TURCK Inc.
3000 Campus Drive
USA-Minneapolis, MN 55441-2656
Phone (+1) (763) 553-9224
553-7300
Fax (+1) (763) 553-0708
E-Mail mailbag@turck.com

Spain
Turck Banner S. L.
Travessera de Gracia 300, 5°-3a
E-08025 Barcelona
Phone (+34) 667 98 35 41
Fax (+34) 93 457 25 27
E-Mail: info@turckbanner.es

... and more than 60 representatives and agencies world-wide.

www.turck.com

D101341 0303

Irrtümer und Änderungen vorbehalten