Catalog D 12 • 2006

sinamics

SINAMICS GM150
SINAMICS SM150

Medium-Voltage Converters
0.8 MVA to 28 MVA

SIEMENS

Related catalogs

SINAMICS G110 D 11.1
Inverter Chassis Units
0.12 kW to 3 kW

Order No.:
E86060-K5511-A111-A2 (German)
E86060-K5511-A111-A2-7600 (English)

SINAMICS G130 D 11
Drive Converter Chassis Units
SINAMICS G150
Drive Converter Cabinet Units

Order No.:
E86060-K5511-A101-A3 (German)
E86060-K5511-A101-A3-7600 (English)

SINAMICS S120 D 21.1
Vector Control Drive System

Order No.:
E86060-K5521-A111-A1 (German)
E86060-K5521-A111-A1-7600 (English)

SINAMICS S120 D 21.2
Servo Control Drive System

Order No.:
E86060-K5521-A121-A1-7600 (English)

SINAMICS S150 D 21.3
Drive Converter Cabinet Units
75 kW to 1200 kW

Order No.:
E86060-K5521-A131-A1 (German)
E86060-K5521-A131-A1-7600 (English)

Catalog CA 01 CA 01
The Offline Mall of Automation and Drives

Order No.:
CD-ROM: E86060-D4001-A100-C4 (German)
CD-ROM: E86060-D4001-A110-C4-7600 (English)
DVD: E86060-D4001-A500-C4 (German)
DVD: E86060-D4001-A510-C4-7600 (English)

A&D Mall
Internet:
http://www.siemens.com/automation/mall

Trademarks

All product designations may be trademarks or product names of Siemens AG or supplier companies whose use by third parties for their own purposes could violate the rights of the owners.

SINAMICS GM150
SINAMICS SM150

Medium-Voltage Converters

0.8 MVA to 28 MVA

Catalog D 12 · 2006

© Siemens AG 2006

The products and systems described in this catalog are produced/distributed in accordance with the requirements of a quality management system which has been certified to DIN EN ISO 9001 and DIN EN ISO 14001 (Certificate Registration No. 002241 QM UM). The certificate is recognized in all IQNet countries.

SIEMENS

Introduction	1
SINAMICS GM150 • IGBT version	2
SINAMICS GM150 • IGCT version	3
SINAMICS SM150	4
Description of options	5
Accessories	6
Configuration	7
Services and documentation	8
Appendix	9

Welcome to Automation and Drives

We would like to welcome you to Automation and Drives and our comprehensive range of products, systems, solutions and services for production and process automation and building technology worldwide.

With Totally Integrated Automation and Totally Integrated Power, we deliver solution platforms based on standards that offer you a considerable savings potential.

Discover the world of our technology now. If you need more detailed information, please contact one of your regional Siemens partners.

They will be glad to assist you.

Totally Integrated Automation – innovations for more productivity

With the launch of Totally Integrated Automation, we were the first ones on the market to consistently implement the trend from equipment to an integrated automation solution, and have continuously improved the system ever since.

Whether your industry is process- and production-oriented or a hybrid, Totally Integrated Automation is a unique "common solution" platform that covers all the sectors.

Totally Integrated Automation is an integrated platform for the entire production line - from receiving to technical processing

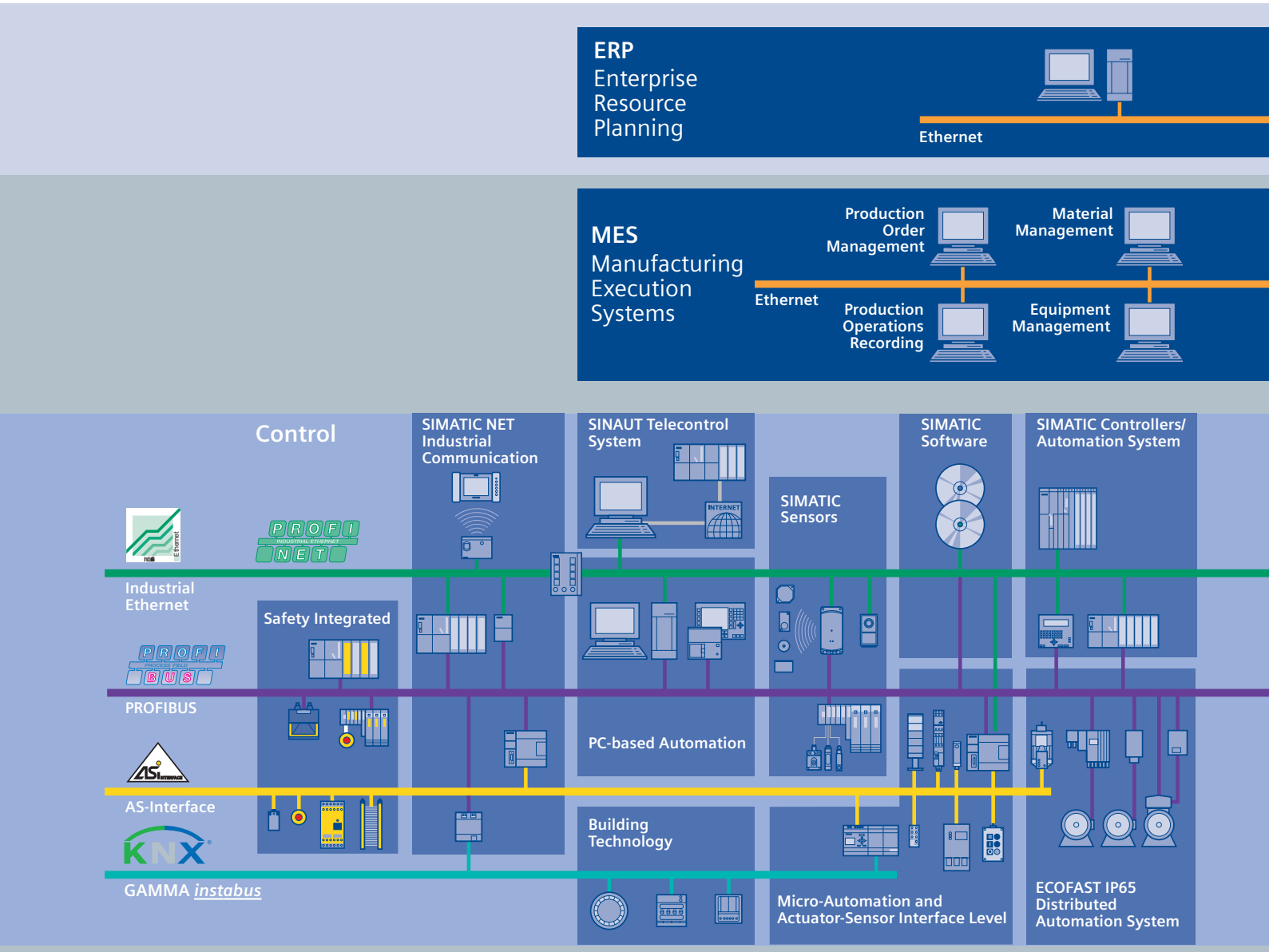

and production areas to shipping. Thanks to the system-oriented engineering environment, integrated, open communications as well as intelligent diagnostics options, your plant now benefits in every phase of the life cycle.

In fact, to this day we are the only company worldwide that can offer a control system based on an integrated platform for both the production and process industry.

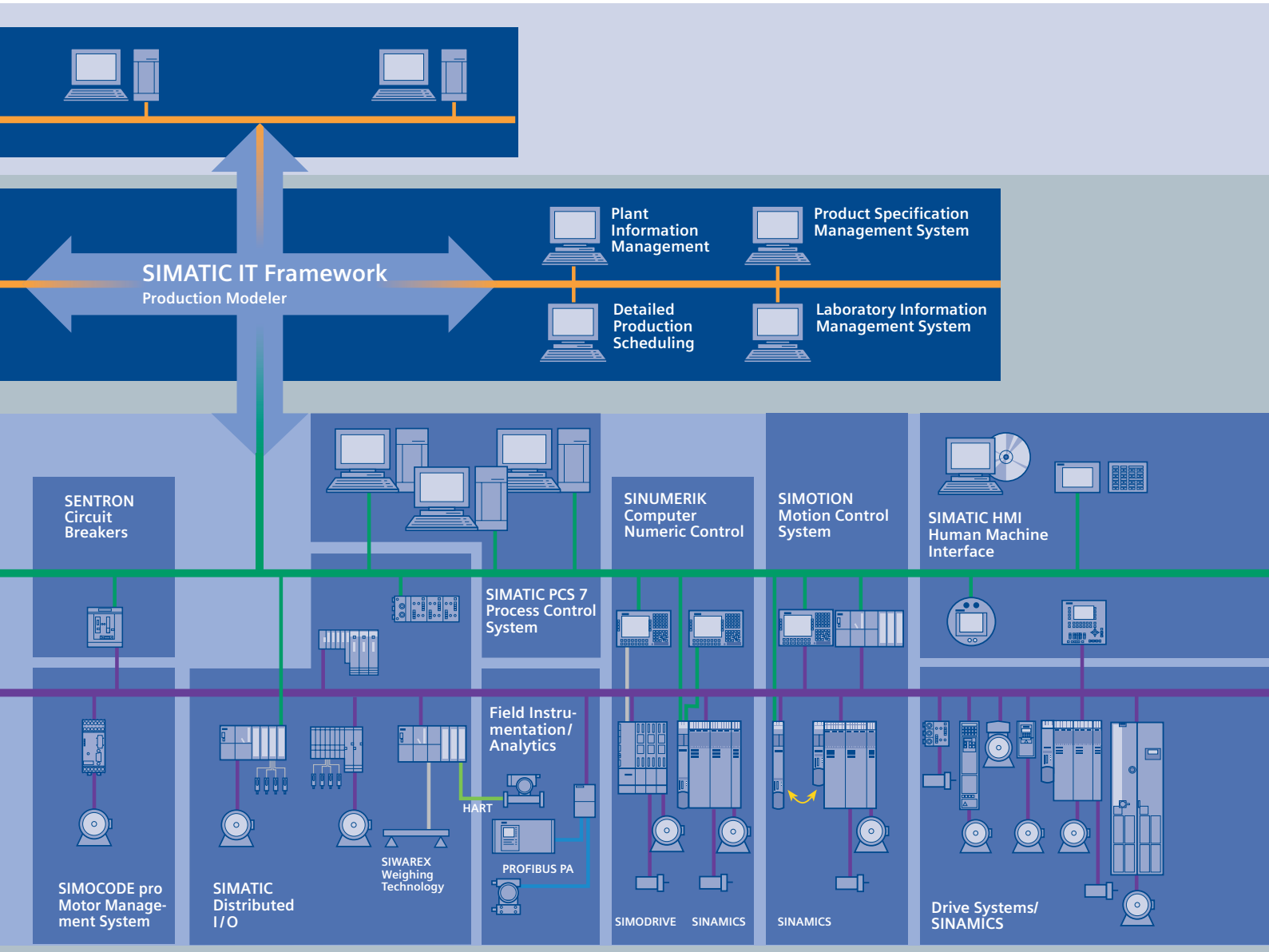

The SINAMICS drive family

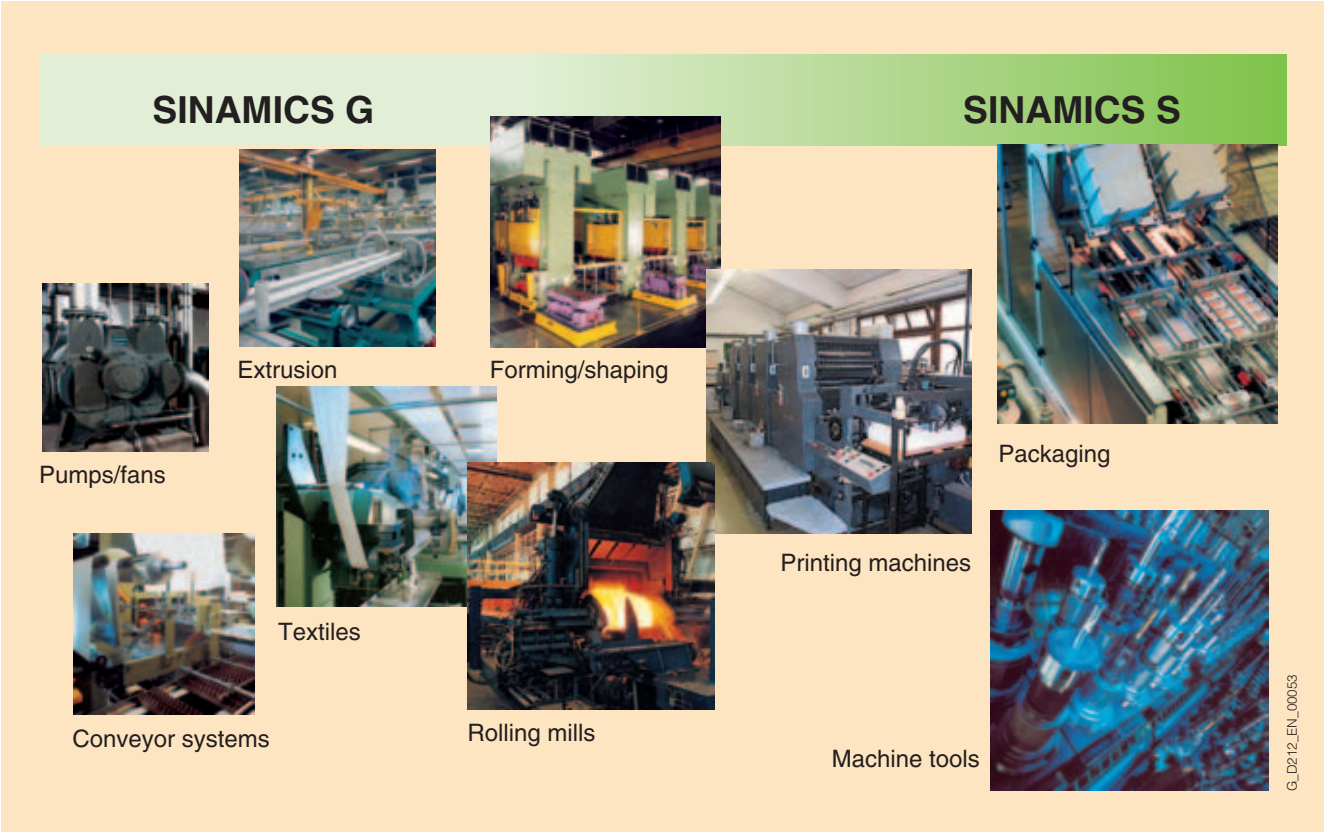

Applications of the SINAMICS drive family

Applications

SINAMICS is the new family of Siemens drives designed for machine and plant engineering applications. SINAMICS offers solutions for all drive tasks:

- Simple pump and fan applications in the process industry.
- Complex individual drives in centrifuges, presses, extruders, elevators, as well as conveyor and transport systems.
- Drive line-ups in textile, plastic film and paper machines, as well as in rolling mill plants.
- Highly dynamic servo drives for machine tools, as well as packaging and printing machines.

Versions

Depending on the application, the SINAMICS range offers the ideal version for any drive task.

- SINAMICS G is designed for standard applications with induction motors. These applications have less stringent requirements regarding the dynamics and accuracy of the motor speed.
- SINAMICS S handles complex drive tasks with synchronous/induction motors and fulfills stringent requirements regarding:
  - dynamics and accuracy
  - integration of extensive technological functions in the drive control system

Platform concept and Totally Integrated Automation

All SINAMICS versions are based on a platform concept. Common hardware and software components, as well as standardized tools for design, configuration and commissioning tasks, ensure high-level integration across all components. SINAMICS handles a wide variety of drive tasks with no system gaps. The different SINAMICS versions can be easily combined with each other.

SINAMICS is part of the Siemens “Totally Integrated Automation” concept. Integrated SINAMICS systems covering configuration, data storage and communication at automation level, ensure low-maintenance solutions with the SIMATIC, SIMOTION and SINUMERIK control systems.

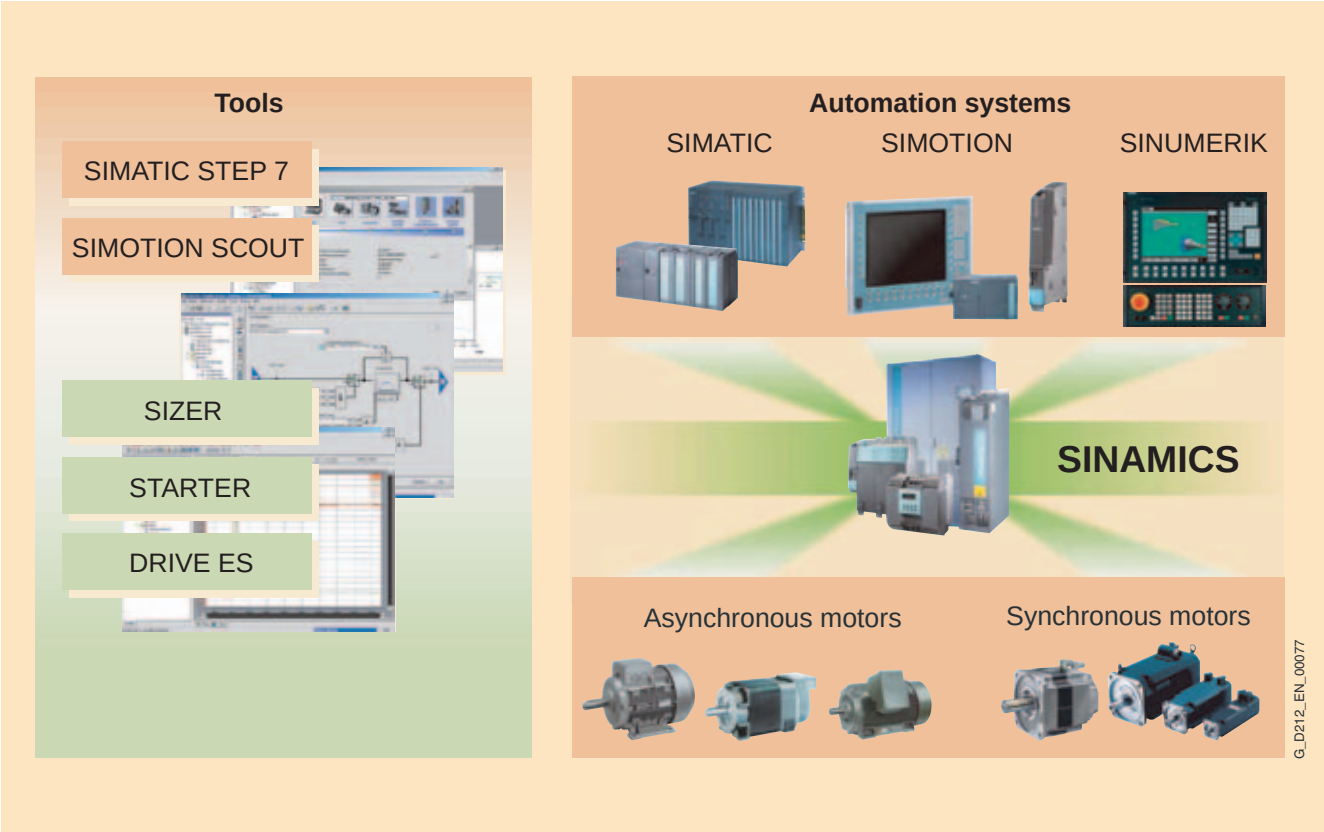

SINAMICS as part of the Siemens modular automation system

Quality in accordance with DIN EN ISO 9001

SINAMICS conforms with the most exacting quality requirements. Comprehensive quality assurance measures in all development and production processes, ensure a consistently high level of quality.

Of course, our quality assurance system is certified by an independent authority in accordance with DIN EN ISO 9001.

The SINAMICS drive family

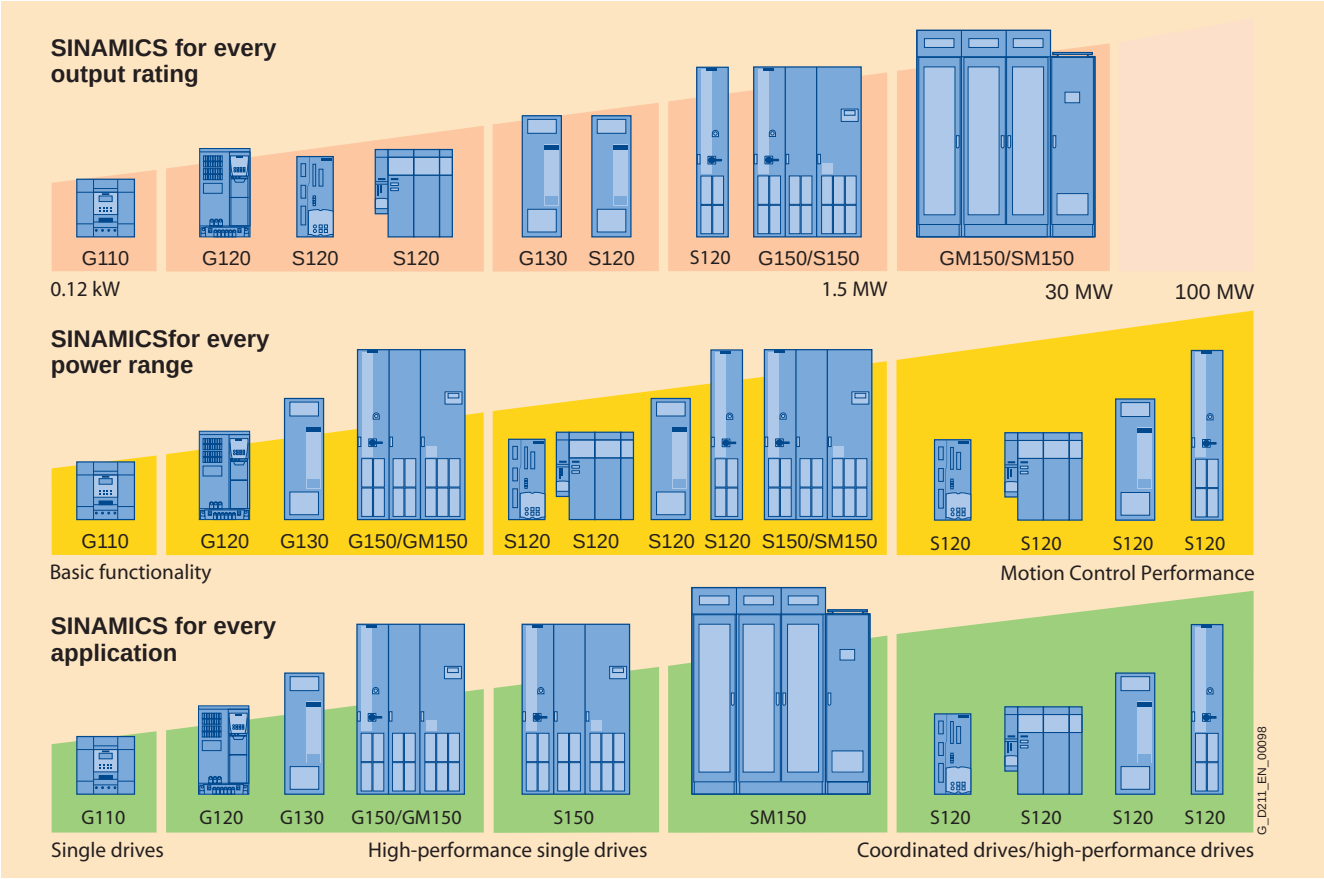

Tailored to the respective areas of application, SINAMICS is divided into the family members:

- **SINAMICS G110** – the versatile drive for low power ranges
- **SINAMICS G130** and **SINAMICS G150** – the universal drive solution for high-performance single drives
- **SINAMICS S120** – the flexible, modular drive system for demanding tasks
- **SINAMICS S150** – the advanced drive solution for high-performance single drives
- **SINAMICS GM150** – the universal drive solution for single drives in the medium-voltage range
- **SINAMICS SM150** – the advanced drive solution for single and multi-motor drives in the medium-voltage range

The SINAMICS range is characterized by the following system features:

- uniform functionality based on platform concept
- uniform engineering
- high degree of flexibility and combination
- wide power range
- designed for global use
- SINAMICS Safety Integrated
- increased economy and effectivity
- versatile interfacing facilities to host controllers
- Totally Integrated Automation

Overview

The SINAMICS GM150 and SINAMICS SM150 converters are the expansion of the SINAMICS drive family in the medium voltage range. They are supplied as ready-to-connect cabinet units.

SINAMICS GM150

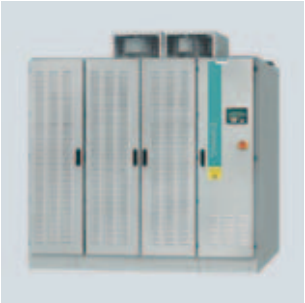

SINAMICS GM150 converters are designed as single-motor drives for applications with square-law and constant load characteristics without regenerative feedback.

Typical applications:

- Pumps and fans
- Compressors
- Extruders and mixers
- Mills
- Marine drives

The motor-side inverters (Motor Modules) have IGBT power semiconductors in the lower power range to 10 MVA and IGCT power semiconductors in the upper power range from 10 MVA to 28 MVA.

SINAMICS SM150

SINAMICS SM150 converters are designed for demanding single and multi-motor applications and meet the following requirements:

- High dynamic response
- Operation at low frequency
- Four-quadrant operation

Typical applications:

- Rolling mill drives (cold, hot)
- Mine hoist drives
- Test stands
- Conveyor belts

Both the line-side inverters (Active Line Modules) and the motor-side inverters are equipped with IGCT power semiconductors.

	SINAMICS GM150 IGBT	SINAMICS GM150 IGCT	SINAMICS SM150 IGCT
Line Module (line-side rectifier)			
• Basic Line Module, 12-pulse (two-quadrant operation)	Standard	Standard	–
• Basic Line Module, 24-pulse (two-quadrant operation)	Option for 2.3 kV to 4.16 kV Standard for 6.0 kV and 6.6 kV and parallel connection	Option	–
• Active Line Module (four-quadrant operation)	–	–	Standard
Motor Module (motor-side inverter)			
Voltage range	2.3 kV to 6.6 kV	3.3 kV	3.3 kV
Power range (typ.)	0.8 MVA to 10 MVA	10 MVA to 28 MVA	5 MVA to 28 MVA
Cooling method			
• Air cooling	Standard	–	–
• Water cooling	Standard	Standard	Standard
Control modes			
• Induction motor	Standard	Standard	Standard
• Synchronous motor, separately excited	Option	Option	Option
• Synchronous motor, permanently excited	–	Option	Option
Sine-wave filter	Option	–	–
DC bus configuration with several Motor Modules on one common DC bus	–	–	Standard

Benefits

- Low-cost: all the way from planning to service
- Simple and uncomplicated in every regard: engineering, integration, operation and diagnostics
- High availability: robust and reliable components, easy installation, high service-friendliness

Further members of the SINAMICS drive family

Overview

SINAMICS G110	SINAMICS G130/G150	SINAMICS S120	SINAMICS S150
The versatile drive for low power ranges	***The universal drive solution for high-performance single drives***	***The flexible, modular drive system for complex drive tasks***	***The advanced drive solution for high-performance single drives***
Main applications			
• Machines and plants for industrial and commercial applications	• Machines and plants in the process and production industry, water/waste, power stations, oil and gas, petrochemicals, chemical raw materials, paper, cement, stone, steel	• Machines and plants for industrial applications (packaging, plastics, textile, printing, wood, glass, ceramics, presses, paper, lifting equipment, semiconductors, automated assembly and testing equipment, handling)	• Machines and plants in the process and production industry, food, beverages and tobacco, automotive and steel industry, mining/opencast mining, shipbuilding, lifting equipment/conveyors
Application examples			
• Pumps and fans • Auxiliary drives • Conveyor belts • Billboards • Door/gate operating mechanisms • Centrifuges	• Pumps and fans • Compressors • Extruders and mixers • Mills	• Motion Control applications (e.g. positioning, synchronous operation, …) • Technological applications	• Test bay drives • Centrifuges • Elevators and cranes • Cross cutters and shears • Conveyor belts • Presses • Cable winches
Highlights			
• Compact • Flexible adaptation to different applications • Simple, fast commissioning • Clear terminal layout • Optimum interaction with SIMATIC and LOGO!	• Space-saving • Low-noise • Simple, fast commissioning • SINAMICS G130: modular components • SINAMICS G150: ready-to-connect cabinet unit • Optimum interaction with SIMATIC	• For universal use • Flexible and modular • Scalable in terms of power, function, number of axes, performance • Simple, fast commissioning, auto-configuration • Innovative system architecture • Wide range of motors • Optimum interaction with SIMOTION and SIMATIC • SINAMICS Safety Integrated	• Four-quadrant operation as standard • High control accuracy and dynamic response • Almost no line harmonic distortions • Tolerant to fluctuations in line voltage • Option of power factor compensation • Simple, fast commissioning • Ready-to-connect cabinet unit • Optimum interaction with SIMATIC

SINAMICS GM150
IGBT version

2

2/2	**Overview**
2/2	**Benefits**
2/3	**Design**
2/6	**Function**
	Selection and ordering data
2/8	Air cooling, without sine-wave filter
2/9	Air cooling, with sine-wave filter
2/10	Water cooling, without sine-wave filter
2/11	Water cooling, with sine-wave filter
2/12	**Options**
2/17	**Technical data**
2/17	General technical data
2/18	Control properties
2/18	Ambient conditions
2/19	Installation conditions and derating data
	Converter-related technical data
2/21	Air cooling, without sine-wave filter
2/35	Air cooling, with sine-wave filter
2/49	Water cooling, without sine-wave filter
2/62	Water cooling, with sine-wave filter

IGBT version

Overview

SINAMICS GM150 in IGBT version (air-cooled)

SINAMICS GM150 converters in IGBT version can be optimally combined with Siemens converter motors. Sine-wave filters are not required in this case. This ensures that the drive solution is particularly cost-effective, compact and efficient.

With the sine-wave filter available as an option, the converters offer the best conditions on the market for the operation of standard motors. This makes them ideally suited for the retrofitting of existing systems from fixed-speed drives to variable speed drives.

SINAMICS GM150 converters in IGBT version offer economic drive solutions that can be matched to customers' specific requirements by chosing from the wide range of available components and options.

IGBT converters are available for the following voltages and power ranges:

Rated output voltage	Type rating with air cooling	with water cooling
kV	MVA	MVA
2.3	1.0 to 2.4	2.0 to 3.2
3.3	1.0 to 6.3	2.0 to 8.0
4.16	1.3 to 7.9	2.0 to 10.1
6.0	0.8 to 5.0	1.8 to 7.3
6.6	0.9 to 5.5	1.9 to 8.0

Global use

SINAMICS GM150 converters in IGBT version are manufactured to international standards and regulations, making them ideally suited for global use. These converters are also available in a UL-listed version and in a marine version (meeting the requirements of all major classification organizations).

Benefits

- Compact design and high flexibility in configuration ensures easy plant integration
- Easy operation and monitoring on the convenient operator panel
- Easy and reliable operation through integrated maintenance functions: the converter signals early and automatically if maintenance is required or components need to be exchanged
- High robustness and reliability due to the use of HV-IGBT technology and fuseless design combined with intelligent reaction to external disturbances
- Can be easily integrated into automation solutions due to PROFIBUS interface supplied as standard and various analog and digital interfaces
- High level of service-friendliness through innovative power section design with plug-in power cards and easy access to all components

Design

SINAMICS GM150 converters in IGBT version are available with a 12-pulse or 24-pulse Basic Line Module.

The 12-pulse version is standard for smaller output ratings with voltages of 2.3 kV, 3.3 kV and 4.16 kV.

For higher output ratings and for voltages of 6.0 kV and 6.6 kV, two Basic Line Modules and two Motor Modules are connected in parallel with a common DC link or two Line Modules are connected in series (24-pulse Basic Line Modules).

The 24-pulse Basic Line Module is optionally available for smaller output ratings with voltages of 2.3 kV, 3.3 kV and 4.16 kV.

HV-IGBT power semiconductors mounted on plug-in, easy to change power cards are used in the Motor Modules.

Both line and motor connections can be optionally realized from bottom or top.

The converter cabinet consists of a section for the Basic Line Module, a section for the Motor Module and the control section.

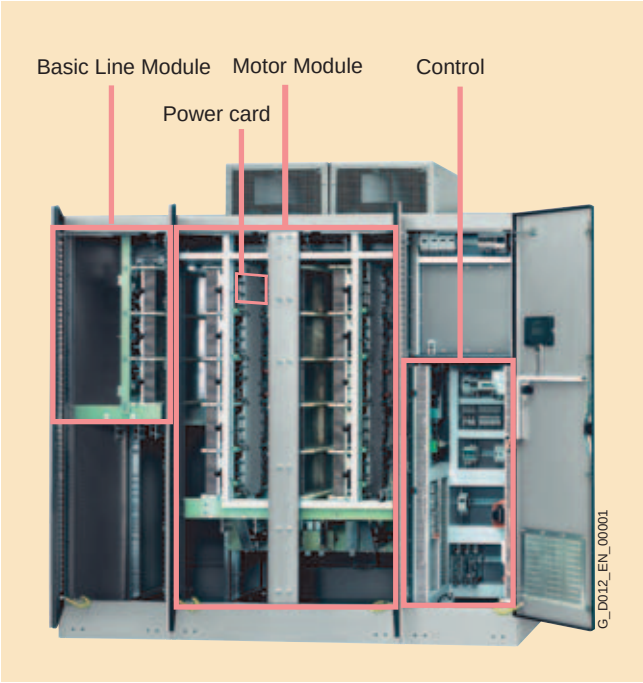

SINAMICS GM150 in air-cooled IGBT version, internal arrangement

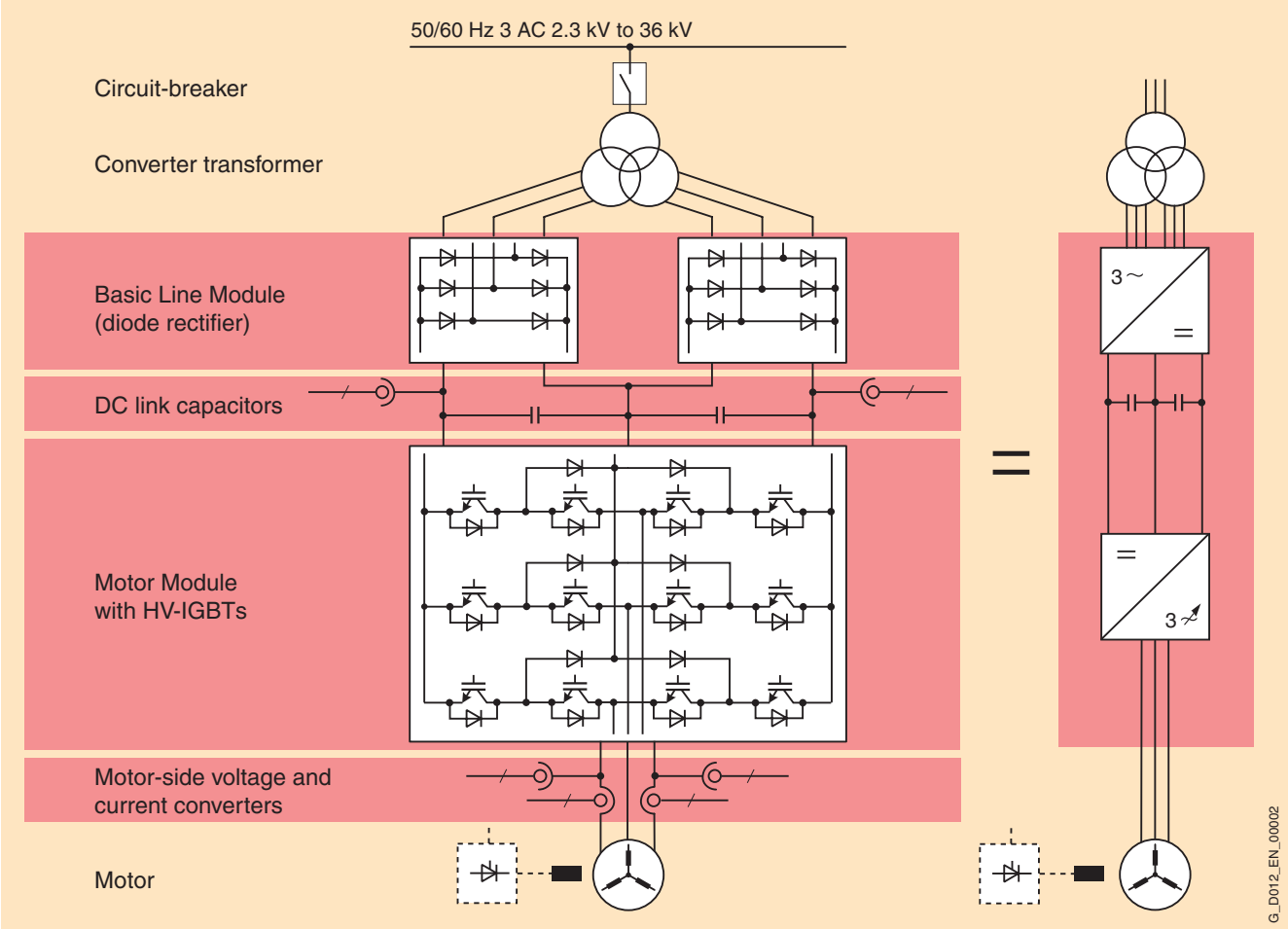

Block diagram

Design (continued)

The following circuit designs are available for SINAMICS GM150 in IGBT version.

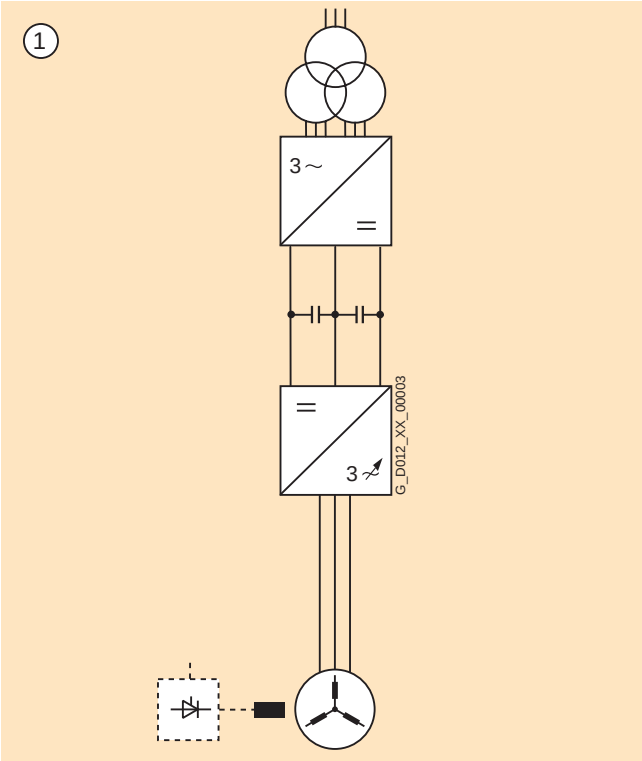

Basic circuit, 12-pulse infeed

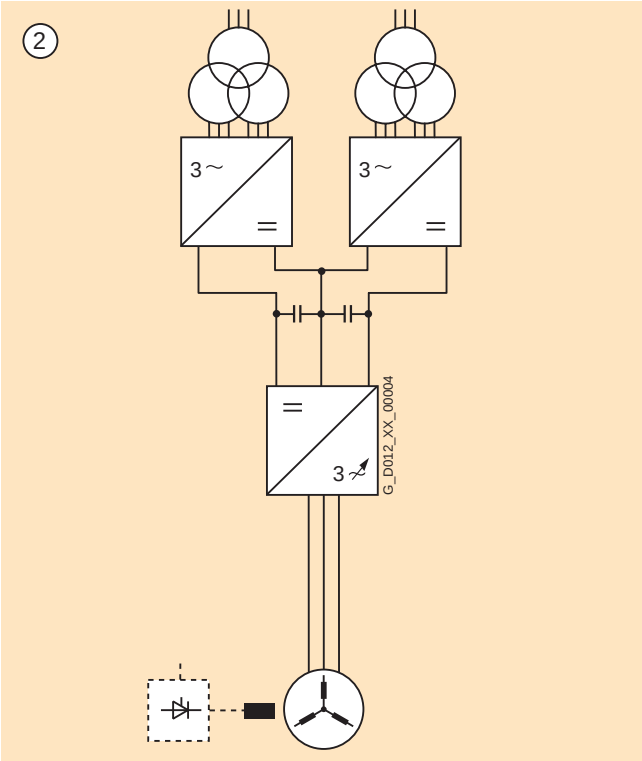

24-pulse infeed through series connection of two Basic Line Modules: option **N15**, standard for 6.0 kV and 6.6 kV

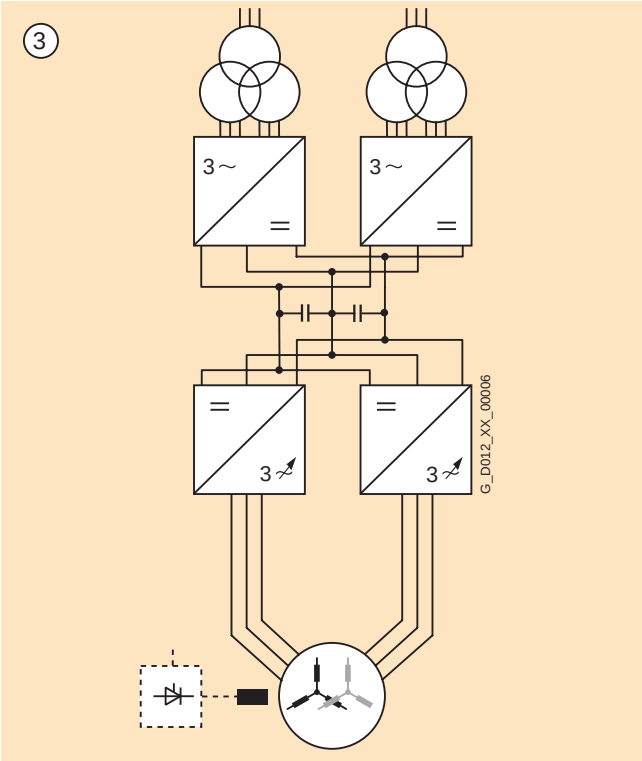

Power increased by parallel connection of Basic Line Modules and Motor Modules on a common DC bus for 3.3 kV and 4.16 kV
(24-pulse infeed as standard)

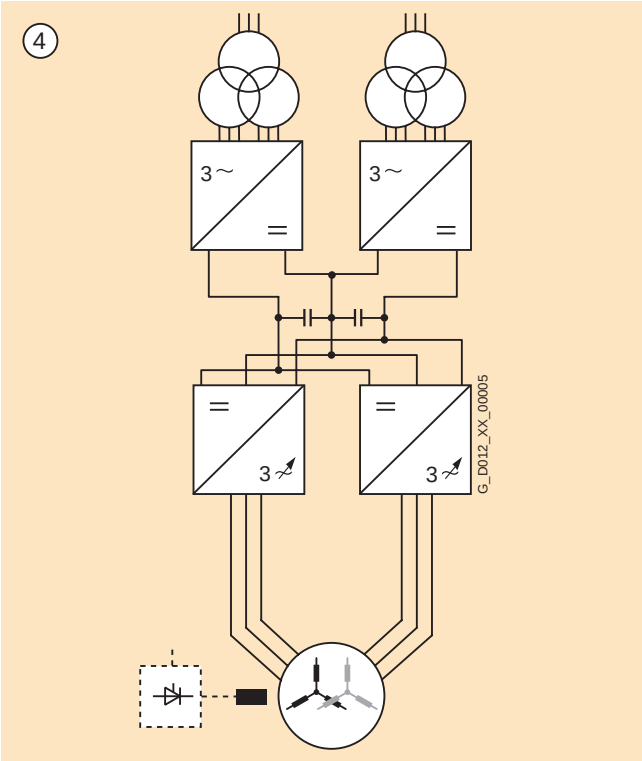

Power increased by parallel connection of Motor Modules on a common DC bus for 6.0 kV and 6.6 kV
(24-pulse infeed as standard)

Design (continued)

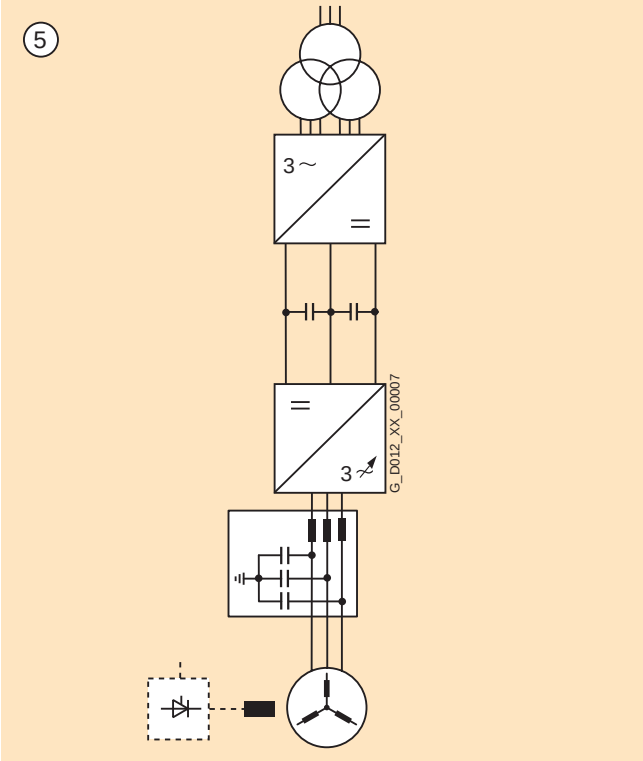

Basic circuit with sine-wave filter for operating standard motors (option **Y15**)

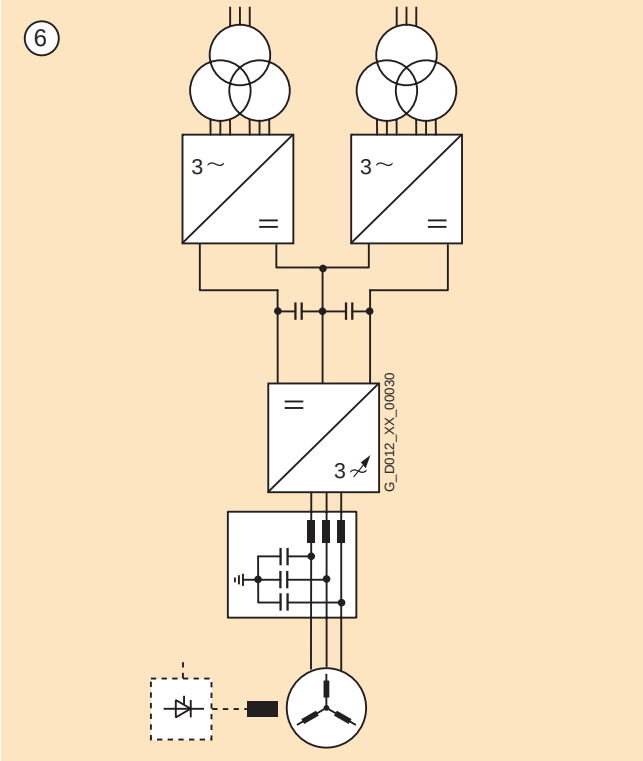

24-pulse infeed through series connection of two Basic Line Modules: option **N15**, standard for 6.0 kV and 6.6 kV; in this case with sine-wave filter for operating standard motors (option **Y15**)

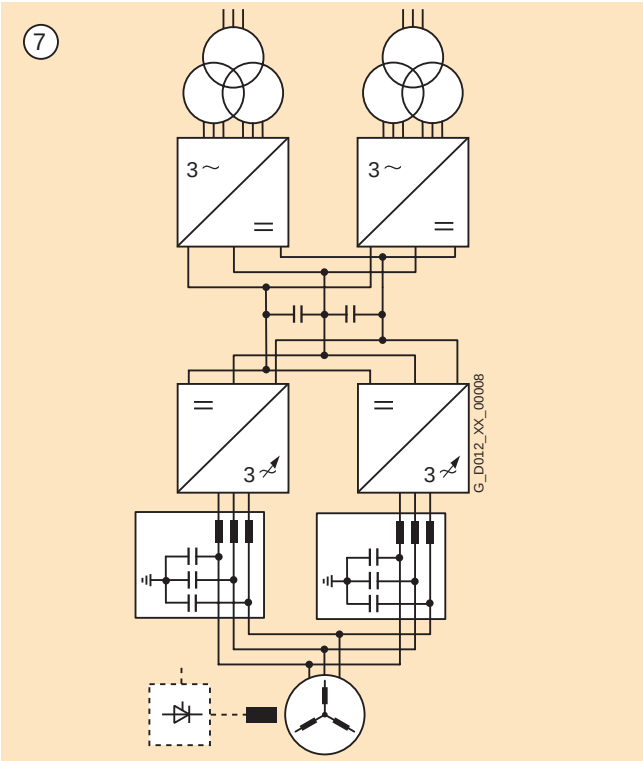

Parallel connection with sine-wave filter for operating standard motors for 3.3 kV and 4.16 kV (option **Y15**)

Note: The motor cables are brought together in the motor terminal box.

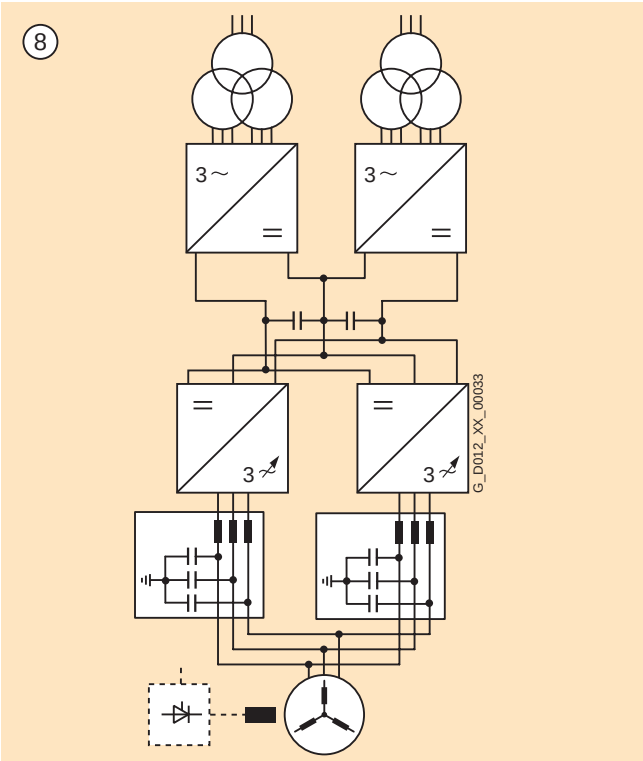

Parallel connection with sine-wave filter for operating standard motors for 6.0 kV and 6.6 kV (option **Y15**)

Note: The motor cables are brought together in the motor terminal box.

Function

Characteristic features

SINAMICS GM150 in IGBT version	
Line Module (line-side rectifier)	
• Basic Line Module, 12-pulse (two-quadrant operation)	Standard
• Basic Line Module, 24-pulse (two-quadrant operation)	Option for 2.3 kV to 4.16 kV Standard for 6 kV and 6.6 kV and parallel connection
Motor Module (motor-side inverter)	
Voltage range	2.3 kV to 6.6 kV
Power range (typ.)	0.8 MVA to 10 MVA
Cooling method	
• Air cooling	Standard
• Water cooling	Standard
Control modes	
• Induction motor	Standard
• Synchronous motor, separately excited	Option
Sine-wave filter	Option

Software and protection functions

SINAMICS GM150 in IGBT version	Description
Closed-loop control	The motor-side closed-loop control is realized as a field-oriented closed-loop vector control which can be operated as a speed or torque control as required. The closed-loop vector control achieves the dynamics of a DC drive. This is made possible by the fact that the current components forming the torque and flux can be controlled precisely and independently of each other. Prescribed torques can thus be observed and limited accurately. In the speed range from 1:10, the field-oriented closed-loop control does not require an actual speed value encoder. An actual speed value encoder is required in the following cases: • High dynamics requirements • Torque control/constant torque drives with setting range > 1:10 • Very low speeds • Very high speed accuracy
Setpoint input	The setpoint can be defined internally or externally; internally as a fixed, motorized potentiometer or jog setpoint, externally via the PROFIBUS interface or an analog input of the customer's terminal block. The internal fixed setpoint and the motorized potentiometer setpoint can be switched over or adjusted using control commands via all interfaces.
Ramp-function generator	A user-friendly ramp-function generator with separately adjustable ramp-up and ramp-down times, together with adjustable rounding times in the lower and upper speed ranges, improves the control response and therefore prevents mechanical overloading of the drive train. The ramp-down ramps can be parameterized separately for emergency stop.
$V_{dc\ max}$ controller	The $V_{dc\ max}$ controller automatically prevents overvoltages in the DC link if the set ramp-down ramp is too short, for example. This can also extend the set ramp-down time.
Kinetic buffering (KIP)	Line voltage failures are bridged to the extent permitted by the kinetic energy of the drive train. The speed drops depending on the moment of inertia and the load torque. The current speed setpoint is resumed when the line voltage returns.
Automatic restart (option)	The automatic restart switches the drive on again when the power is restored after a power failure or a general fault, and ramps up to the current speed setpoint.
Flying restart	The flying restart function permits bumpless connection of the converter to a rotating motor.
Diagnostics functions	• Self-diagnostics of control hardware • Non-volatile memory for reliable diagnostics when the power supply fails • Monitoring of HV-IGBTs with individual messages for each slot • User-friendly on-site operator panel with plain text messages
Operating hours and switching cycle counter	The operating hours of the fans are detected and logged so that preventive maintenance or replacements can be performed. The switching cycles of the circuit-breaker are detected and added up, to form the basis of preventive maintenance work.
Detection of actual motor speed (option)	The SMC30 Sensor Module Cabinet-Mounted can be used to detect the actual motor speed. The signals from the rotary pulse encoder are converted here and made available for evaluation via the DRIVE-CLiQ interface of the controller.
Operator protection	The cabinet doors of the power sections are fitted with electromagnetic locks. This prevents the cabinet doors from being opened while hazardous voltages are present inside the cabinet.

Function (continued)

Software and protection functions

SINAMICS GM150 in IGBT version	Description
EMERGENCY STOP button	The converters are equipped as standard with an EMERGENCY STOP button with protective collar which is fitted in the cabinet door. The contacts of the pushbutton are connected in parallel to the terminal block so they can be integrated in a protection concept on the plant side. EMERGENCY STOP category 0 is set as standard for an uncontrolled shutdown (DIN EN 60204-1/VDE 0113-1 (IEC 60204-1)). The function includes voltage disconnection of the converter output through the circuit-breaker. Consequently the motor coasts down. EMERGENCY STOP category 1 is optionally available for a controlled shutdown.
Insulation monitoring	The converters feature insulated monitoring of the whole galvanic network from the secondary side of the transformer to the stator windings of the motor.
I/O monitoring	An extensive package of options for I/O monitoring (from the transformer and the motor through to the auxiliaries) is available. In addition it is possible to monitor the temperature with thermocouples or PT100 resistors.
Thermal overload protection	A warning message is issued first when the overtemperature threshold responds. If the temperature rises further, either a shutdown is carried out or automatic influencing of the output current so that a reduction in the thermal load is achieved. Following elimination of the cause of the fault (e.g. improvement of the ventilation), the original operating values are automatically resumed. For example, if air-cooled converters with filter mats are used, the pollution of the filter mats is monitored and reported by differential pressure measurement. In the case of water-cooled converters, the water temperature and flow rate are detected at several points in the cooling circuit and evaluated. An extensive self-diagnostics protects the converter and reports faults.
Grounding switch (option)	If grounding on the line or motor side is required for safety and protection reasons, a motor-operated grounding switch can be ordered. For safety reasons, the converter controller locks these grounding switches against activation while voltage is still present. The control is integrated into the protection and monitoring chain of the converter. The grounding switches are inserted automatically when the standard grounding switches of the DC link are inserted.
Capacitor trip device	For applications in which the existing circuit-breaker has no undervoltage coil and cannot be retrofitted there are capacitor trip devices available for 110 to 120 V DC and for 230 V DC. They ensure that the circuit-breaker on the plant side can still be safely disconnected even if there is a power failure or the normal OFF command is not effective, e.g. because of a wire break.

AOP30 operator panel

The AOP30 operator panel is fitted into the cabinet door of the SINAMICS GM150 for operation, monitoring and commissioning.

It has the following features and characteristics:

- graphical LCD display with backlighting for plain-text display and a bar display of process variables
- LEDs for displaying the operational status
- help function describing causes of and remedies for faults and alarms
- keypad for operational control of a drive
- local/remote switchover for selecting the input point (priority assigned to operator panel or customer's terminal block/ PROFIBUS)
- numeric keypad for input of setpoint or parameter values
- function keys for prompted navigation in the menu
- two-stage safety strategy to protect against accidental or unauthorized changes to settings. Operation of the drive from the operator panel can be disabled by a password, ensuring that only parameter values and process variables can be displayed in the panel. A password can be used to prevent the unauthorized modification of converter parameters.

The operator panel languages - English, German, Spanish and Chinese - are stored on the CompactFlash card of the Control Unit.

IGBT version
Air cooling, without sine-wave filter

Selection and ordering data

Type rating	Shaft output		Rated output current	SINAMICS GM150 in IGBT version, air cooling, without sine-wave filter	Circuit designs (page 2/4)
kVA	kW	hp	A	Order No.	Fig. No.
Output voltage 2.3 kV					
1000	820	1000	250	**6SL3810-2LM32-5AA0**	①
1200	1000	1250	300	**6SL3810-2LM33-0AA0**	①
1400	1150	1500	350	**6SL3810-2LM33-5AA0**	①
1600	1300	1750	400	**6SL3810-2LM34-0AA0**	①
1800	1500	2000	450	**6SL3810-2LM34-5AA0**	①
2000	1650	2250	500	**6SL3810-2LM35-0AA0**	①
2200	1800	2500	550	**6SL3810-2LM35-5AA0**	①
2400	2000	2750	600	**6SL3810-2LM36-0AA0**	①
Output voltage 3.3 kV					
1000	850	1000	180	**6SL3810-2LN31-8AA0**	①
1300	1050	1250	220	**6SL3810-2LN32-2AA0**	①
1500	1250	1500	260	**6SL3810-2LN32-6AA0**	①
1700	1400	2000	300	**6SL3810-2LN33-0AA0**	①
2000	1650	2250	350	**6SL3810-2LN33-5AA0**	①
2300	1900	2500	400	**6SL3810-2LN34-0AA0**	①
2600	2150	3000	450	**6SL3810-2LN34-5AA0**	①
2900	2400	3250	500	**6SL3810-2LN35-0AA0**	①
3100	2650	3500	550	**6SL3810-2LN35-5AA0**	①
3400	2850	3750	600	**6SL3810-2LN36-0AA0**	①
3800	3100	4000	2 × 330	**6SL3810-2LN36-6AA0**	③
4100	3400	4500	2 × 360	**6SL3810-2LN37-2AA0**	③
4600	3900	5000	2 × 405	**6SL3810-2LN38-1AA0**	③
5100	4300	6000	2 × 450	**6SL3810-2LN38-8AA0**	③
5700	4800	6500	2 × 500	**6SL3810-2LN41-0AA0**	③
6300	5300	7000	2 × 550	**6SL3810-2LN41-1AA0**	③
Output voltage 4.16 kV					
1300	1000	1500	180	**6SL3810-2LP31-8AA0**	①
1600	1300	1750	220	**6SL3810-2LP32-2AA0**	①
1900	1550	2000	260	**6SL3810-2LP32-6AA0**	①
2200	1800	2500	300	**6SL3810-2LP33-0AA0**	①
2500	2100	3000	350	**6SL3810-2LP33-5AA0**	①
2900	2400	3250	400	**6SL3810-2LP34-0AA0**	①
3200	2700	3500	450	**6SL3810-2LP34-5AA0**	①
3600	3000	4000	500	**6SL3810-2LP35-0AA0**	①
4000	3300	4500	550	**6SL3810-2LP35-5AA0**	①
4300	3600	5000	600	**6SL3810-2LP36-0AA0**	①
4800	4000	5500	2 × 330	**6SL3810-2LP36-6AA0**	③
5200	4300	6000	2 × 360	**6SL3810-2LP37-2AA0**	③
5800	4900	6500	2 × 405	**6SL3810-2LP38-1AA0**	③
6500	5400	7000	2 × 450	**6SL3810-2LP38-8AA0**	③
7200	6000	8000	2 × 500	**6SL3810-2LP41-0AA0**	③
7900	6600	9000	2 × 550	**6SL3810-2LP41-1AA0**	③

Type rating	Shaft output		Rated output current	SINAMICS GM150 in IGBT version, air cooling, without sine-wave filter	Circuit designs (page 2/4)
kVA	kW	hp	A	Order No.	Fig. No.
Output voltage 6.0 kV					
800	700	900	80	**6SL3810-2LQ30-8AA0**	②
1000	850	1250	100	**6SL3810-2LQ31-0AA0**	②
1200	1050	1500	120	**6SL3810-2LQ31-2AA0**	②
1600	1300	1750	150	**6SL3810-2LQ31-5AA0**	②
1900	1550	2000	180	**6SL3810-2LQ31-8AA0**	②
2100	1750	2250	200	**6SL3810-2LQ32-0AA0**	②
2300	1950	2500	225	**6SL3810-2LQ32-2AA0**	②
2500	2100	2750	245	**6SL3810-2LQ32-4AA0**	②
2800	2350	3000	270	**6SL3810-2LQ32-7AA0**	②
3100	2550	3500	2 × 148	**6SL3810-2LQ33-0AA0**	④
3400	2800	3750	2 × 163	**6SL3810-2LQ33-2AA0**	④
3800	3200	4000	2 × 183	**6SL3810-2LQ33-6AA0**	④
4200	3500	4500	2 × 203	**6SL3810-2LQ34-0AA0**	④
4600	3900	5000	2 × 223	**6SL3810-2LQ34-4AA0**	④
5000	4200	5500	2 × 240	**6SL3810-2LQ34-8AA0**	④
Output voltage 6.6 kV					
900	750	1000	80	**6SL3810-2LR30-8AA0**	②
1100	950	1250	100	**6SL3810-2LR31-0AA0**	②
1400	1150	1500	120	**6SL3810-2LR31-2AA0**	②
1700	1400	2000	150	**6SL3810-2LR31-5AA0**	②
2100	1700	2250	180	**6SL3810-2LR31-8AA0**	②
2300	1900	2500	200	**6SL3810-2LR32-0AA0**	②
2600	2150	2750	225	**6SL3810-2LR32-2AA0**	②
2800	2300	3000	245	**6SL3810-2LR32-4AA0**	②
3100	2600	3500	270	**6SL3810-2LR32-7AA0**	②
3400	2800	3750	2 × 148	**6SL3810-2LR33-0AA0**	④
3700	3100	4000	2 × 163	**6SL3810-2LR33-2AA0**	④
4200	3500	4500	2 × 183	**6SL3810-2LR33-6AA0**	④
4600	3900	5000	2 × 203	**6SL3810-2LR34-0AA0**	④
5100	4200	5500	2 × 223	**6SL3810-2LR34-4AA0**	④
5500	4600	6000	2 × 240	**6SL3810-2LR34-8AA0**	④

Selection and ordering data (continued)

Type rating kVA	Shaft output kW	hp	Rated output current A	SINAMICS GM150 in IGBT version, air cooling, with sine-wave filter Order No.	Circuit designs (page 2/5) Fig. No.
Output voltage 2.3 kV					
850	700	900	210	**6SL3810-2LM32-5AA0-Z Y15**	⑤
1000	800	1000	250	**6SL3810-2LM33-0AA0-Z Y15**	⑤
1150	950	1250	290	**6SL3810-2LM33-5AA0-Z Y15**	⑤
1300	1100	1500	330	**6SL3810-2LM34-0AA0-Z Y15**	⑤
1450	1200	1600	370	**6SL3810-2LM34-5AA0-Z Y15**	⑤
1650	1400	1750	420	**6SL3810-2LM35-0AA0-Z Y15**	⑤
1850	1500	2000	460	**6SL3810-2LM35-5AA0-Z Y15**	⑤
2000	1650	2250	500	**6SL3810-2LM36-0AA0-Z Y15**	⑤
Output voltage 3.3 kV					
850	700	900	150	**6SL3810-2LN31-8AA0-Z Y15**	⑤
1100	900	1000	190	**6SL3810-2LN32-2AA0-Z Y15**	⑤
1250	1050	1250	220	**6SL3810-2LN32-6AA0-Z Y15**	⑤
1450	1200	1500	250	**6SL3810-2LN33-0AA0-Z Y15**	⑤
1700	1400	1750	300	**6SL3810-2LN33-5AA0-Z Y15**	⑤
1950	1600	2000	340	**6SL3810-2LN34-0AA0-Z Y15**	⑤
2250	1850	2500	390	**6SL3810-2LN34-5AA0-Z Y15**	⑤
2450	2000	2750	430	**6SL3810-2LN35-0AA0-Z Y15**	⑤
2650	2200	3000	460	**6SL3810-2LN35-5AA0-Z Y15**	⑤
2900	2450	3250	510	**6SL3810-2LN36-0AA0-Z Y15**	⑤
3250	2750	3500	570	**6SL3810-2LN36-6AA0-Z Y15**	⑦
3500	2900	4000	610	**6SL3810-2LN37-2AA0-Z Y15**	⑦
3900	3200	4500	680	**6SL3810-2LN38-1AA0-Z Y15**	⑦
4350	3600	5000	760	**6SL3810-2LN38-8AA0-Z Y15**	⑦
4850	4100	5500	850	**6SL3810-2LN41-0AA0-Z Y15**	⑦
5350	4500	6000	940	**6SL3810-2LN41-1AA0-Z Y15**	⑦
Output voltage 4.16 kV					
1100	900	1250	150	**6SL3810-2LP31-8AA0-Z Y15**	⑤
1350	1150	1500	190	**6SL3810-2LP32-2AA0-Z Y15**	⑤
1600	1300	1750	220	**6SL3810-2LP32-6AA0-Z Y15**	⑤
1850	1550	2000	260	**6SL3810-2LP33-0AA0-Z Y15**	⑤
2100	1750	2250	290	**6SL3810-2LP33-5AA0-Z Y15**	⑤
2450	2000	2750	340	**6SL3810-2LP34-0AA0-Z Y15**	⑤
2650	2200	3000	370	**6SL3810-2LP34-5AA0-Z Y15**	⑤
3050	2500	3500	420	**6SL3810-2LP35-0AA0-Z Y15**	⑤
3400	2750	3750	470	**6SL3810-2LP35-5AA0-Z Y15**	⑤
3600	3000	4000	500	**6SL3810-2LP36-0AA0-Z Y15**	⑤
4050	3300	4500	560	**6SL3810-2LP36-6AA0-Z Y15**	⑦
4400	3600	5000	610	**6SL3810-2LP37-2AA0-Z Y15**	⑦
4900	4000	5500	680	**6SL3810-2LP38-1AA0-Z Y15**	⑦
5500	4500	6000	760	**6SL3810-2LP38-8AA0-Z Y15**	⑦
6050	5000	6750	840	**6SL3810-2LP41-0AA0-Z Y15**	⑦
6650	5500	7500	920	**6SL3810-2LP41-1AA0-Z Y15**	⑦

Type rating kVA	Shaft output kW	hp	Rated output current A	SINAMICS GM150 in IGBT version, air cooling, with sine-wave filter Order No.	Circuit designs (page 2/5) Fig. No.
Output voltage 6.0 kV					
650	550	700	64	**6SL3810-2LQ30-8AA0-Z Y15**	⑥
850	700	900	80	**6SL3810-2LQ31-0AA0-Z Y15**	⑥
1000	800	1000	96	**6SL3810-2LQ31-2AA0-Z Y15**	⑥
1250	1050	1250	120	**6SL3810-2LQ31-5AA0-Z Y15**	⑥
1500	1250	1500	144	**6SL3810-2LQ31-8AA0-Z Y15**	⑥
1650	1400	1750	160	**6SL3810-2LQ32-0AA0-Z Y15**	⑥
1850	1550	2000	180	**6SL3810-2LQ32-2AA0-Z Y15**	⑥
2050	1700	2250	196	**6SL3810-2LQ32-4AA0-Z Y15**	⑥
2250	1850	2500	216	**6SL3810-2LQ32-7AA0-Z Y15**	⑥
2450	2000	2750	236	**6SL3810-2LQ33-0AA0-Z Y15**	⑧
2700	2250	3000	260	**6SL3810-2LQ33-2AA0-Z Y15**	⑧
3050	2500	3250	292	**6SL3810-2LQ33-6AA0-Z Y15**	⑧
3350	2800	3750	324	**6SL3810-2LQ34-0AA0-Z Y15**	⑧
3700	3000	4000	356	**6SL3810-2LQ34-4AA0-Z Y15**	⑧
4000	3300	4500	384	**6SL3810-2LQ34-8AA0-Z Y15**	⑧
Output voltage 6.6 kV					
700	550	700	60	**6SL3810-2LR30-8AA0-Z Y15**	⑥
850	700	900	75	**6SL3810-2LR31-0AA0-Z Y15**	⑥
1050	850	1000	90	**6SL3810-2LR31-2AA0-Z Y15**	⑥
1300	1050	1250	113	**6SL3810-2LR31-5AA0-Z Y15**	⑥
1550	1300	1500	135	**6SL3810-2LR31-8AA0-Z Y15**	⑥
1700	1400	1750	150	**6SL3810-2LR32-0AA0-Z Y15**	⑥
1950	1600	2000	169	**6SL3810-2LR32-2AA0-Z Y15**	⑥
2100	1750	2250	184	**6SL3810-2LR32-4AA0-Z Y15**	⑥
2300	1900	2500	203	**6SL3810-2LR32-7AA0-Z Y15**	⑥
2550	2100	2750	221	**6SL3810-2LR33-0AA0-Z Y15**	⑧
2800	2400	3000	244	**6SL3810-2LR33-2AA0-Z Y15**	⑧
3150	2600	3500	274	**6SL3810-2LR33-6AA0-Z Y15**	⑧
3500	2800	4000	304	**6SL3810-2LR34-0AA0-Z Y15**	⑧
3800	3200	4250	334	**6SL3810-2LR34-4AA0-Z Y15**	⑧
4200	3500	4500	368	**6SL3810-2LR34-8AA0-Z Y15**	⑧

Special version **"-Z"**

The order code **Y15** (sine-wave filter) must be quoted in addition and requires plain text (see Description of options, page 5/20).

IGBT version
Water cooling, without sine-wave filter

Selection and ordering data (continued)

Type rating	Shaft output		Rated output current	SINAMICS GM150 in IGBT version, water cooling, without sine-wave filter	Circuit designs (page 2/4)
kVA	kW	hp	A	Order No.	Fig. No.
Output voltage 2.3 kV					
2000	1650	2250	500	**6SL3815-2LM35-0AA0**	①
2200	1800	2500	550	**6SL3815-2LM35-5AA0**	①
2400	2000	2750	610	**6SL3815-2LM36-1AA0**	①
2700	2250	3000	675	**6SL3815-2LM36-7AA0**	①
2900	2450	3250	740	**6SL3815-2LM37-4AA0**	①
3200	2650	3500	800	**6SL3815-2LM38-0AA0**	①
Output voltage 3.3 kV					
2000	1650	2250	350	**6SL3815-2LN33-5AA0**	①
2300	1900	2500	400	**6SL3815-2LN34-0AA0**	①
2600	2150	3000	450	**6SL3815-2LN34-5AA0**	①
2900	2400	3250	500	**6SL3815-2LN35-0AA0**	①
3100	2650	3500	550	**6SL3815-2LN35-5AA0**	①
3500	2900	4000	610	**6SL3815-2LN36-1AA0**	①
3900	3200	4250	675	**6SL3815-2LN36-7AA0**	①
4200	3500	4500	740	**6SL3815-2LN37-4AA0**	①
4600	3800	5000	800	**6SL3815-2LN38-0AA0**	①
5100	4250	6000	2 × 445	**6SL3815-2LN38-8AA0**	③
5700	4750	6500	2 × 495	**6SL3815-2LN41-0AA0**	③
6300	5300	7000	2 × 550	**6SL3815-2LN41-1AA0**	③
6900	5700	7500	2 × 600	**6SL3815-2LN41-2AA0**	③
7400	6200	8000	2 × 650	**6SL3815-2LN41-3AA0**	③
8000	6700	9000	2 × 700	**6SL3815-2LN41-4AA0**	③
Output voltage 4.16 kV					
2000	1700	2250	280	**6SL3815-2LP32-8AA0**	①
2200	1850	2500	310	**6SL3815-2LP33-1AA0**	①
2500	2100	2750	350	**6SL3815-2LP33-5AA0**	①
2900	2400	3000	400	**6SL3815-2LP34-0AA0**	①
3200	2700	3500	450	**6SL3815-2LP34-5AA0**	①
3600	3000	4000	500	**6SL3815-2LP35-0AA0**	①
4000	3300	4500	550	**6SL3815-2LP35-5AA0**	①
4400	3700	5000	610	**6SL3815-2LP36-1AA0**	①
4900	4100	5500	675	**6SL3815-2LP36-7AA0**	①
5300	4500	6000	740	**6SL3815-2LP37-4AA0**	①
5800	4800	6500	800	**6SL3815-2LP38-0AA0**	①
6400	5400	7000	2 × 445	**6SL3815-2LP38-8AA0**	③
7100	6000	8000	2 × 495	**6SL3815-2LP41-0AA0**	③
7900	6600	9000	2 × 550	**6SL3815-2LP41-1AA0**	③
8600	7300	9500	2 × 600	**6SL3815-2LP41-2AA0**	③
9400	7900	10000	2 × 650	**6SL3815-2LP41-3AA0**	③
10100	8500	11000	2 × 700	**6SL3815-2LP41-4AA0**	③

Type rating	Shaft output		Rated output current	SINAMICS GM150 in IGBT version, water cooling, without sine-wave filter	Circuit designs (page 2/4)
kVA	kW	hp	A	Order No.	Fig. No.
Output voltage 6.0 kV					
1800	1450	2000	170	**6SL3815-2LQ31-7AA0**	②
2100	1750	2250	200	**6SL3815-2LQ32-0AA0**	②
2400	2000	2500	230	**6SL3815-2LQ32-3AA0**	②
2700	2250	3000	260	**6SL3815-2LQ32-6AA0**	②
3000	2500	3500	290	**6SL3815-2LQ33-0AA0**	②
3400	2800	3750	325	**6SL3815-2LQ33-2AA0**	②
3700	3100	4000	360	**6SL3815-2LQ33-6AA0**	②
4100	3400	4500	390	**6SL3815-2LQ33-8AA0**	②
4500	3700	5000	2 × 215	**6SL3815-2LQ34-3AA0**	④
4900	4100	5500	2 × 235	**6SL3815-2LQ34-7AA0**	④
5500	4600	6000	2 × 265	**6SL3815-2LQ35-3AA0**	④
6100	5100	6500	2 × 292	**6SL3815-2LQ35-8AA0**	④
6700	5600	7000	2 × 320	**6SL3815-2LQ36-4AA0**	④
7300	6100	8000	2 × 350	**6SL3815-2LQ37-0AA0**	④
Output voltage 6.6 kV					
1900	1600	2000	170	**6SL3815-2LR31-7AA0**	②
2300	1900	2500	200	**6SL3815-2LR32-0AA0**	②
2600	2200	3000	230	**6SL3815-2LR32-3AA0**	②
3000	2500	3250	260	**6SL3815-2LR32-6AA0**	②
3300	2800	3500	290	**6SL3815-2LR33-0AA0**	②
3700	3100	4000	325	**6SL3815-2LR33-2AA0**	②
4100	3400	4500	360	**6SL3815-2LR33-6AA0**	②
4500	3700	5000	390	**6SL3815-2LR33-8AA0**	②
4900	4100	5500	2 × 215	**6SL3815-2LR34-3AA0**	④
5400	4500	6000	2 × 235	**6SL3815-2LR34-7AA0**	④
6100	5100	6500	2 × 265	**6SL3815-2LR35-3AA0**	④
6700	5600	7000	2 × 292	**6SL3815-2LR35-8AA0**	④
7300	6100	8000	2 × 320	**6SL3815-2LR36-4AA0**	④
8000	6700	9000	2 × 350	**6SL3815-2LR37-0AA0**	④

Selection and ordering data (continued)

Type rating kVA	Shaft output kW	hp	Rated output current A	SINAMICS GM150 in IGBT version, water cooling, with sine-wave filter Order No.	Circuit designs (page 2/5) Fig. No.
Output voltage 2.3 kV					
1500	1250	1500	380	**6SL3815-2LM35-0AA0-Z Y15**	⑤
1650	1350	1750	410	**6SL3815-2LM35-5AA0-Z Y15**	⑤
1800	1500	2000	450	**6SL3815-2LM36-1AA0-Z Y15**	⑤
2050	1700	2250	510	**6SL3815-2LM36-7AA0-Z Y15**	⑤
2200	1850	2500	550	**6SL3815-2LM37-4AA0-Z Y15**	⑤
2400	2000	2750	600	**6SL3815-2LM38-0AA0-Z Y15**	⑤
Output voltage 3.3 kV					
1550	1300	1750	270	**6SL3815-2LN33-5AA0-Z Y15**	⑤
1750	1450	2000	310	**6SL3815-2LN34-0AA0-Z Y15**	⑤
2000	1650	2250	350	**6SL3815-2LN34-5AA0-Z Y15**	⑤
2150	1800	2500	380	**6SL3815-2LN35-0AA0-Z Y15**	⑤
2350	1950	2750	410	**6SL3815-2LN35-5AA0-Z Y15**	⑤
2700	2250	3000	470	**6SL3815-2LN36-1AA0-Z Y15**	⑤
2950	2500	3250	520	**6SL3815-2LN36-7AA0-Z Y15**	⑤
3200	2700	3500	560	**6SL3815-2LN37-4AA0-Z Y15**	⑤
3500	2900	4000	610	**6SL3815-2LN38-0AA0-Z Y15**	⑤
3900	3250	4500	680	**6SL3815-2LN38-8AA0-Z Y15**	⑦
4350	3650	5000	760	**6SL3815-2LN41-0AA0-Z Y15**	⑦
4800	4000	5500	840	**6SL3815-2LN41-1AA0-Z Y15**	⑦
5250	4400	6000	920	**6SL3815-2LN41-2AA0-Z Y15**	⑦
5600	4700	6250	980	**6SL3815-2LN41-3AA0-Z Y15**	⑦
6050	5100	6500	1060	**6SL3815-2LN41-4AA0-Z Y15**	⑦
Output voltage 4.16 kV					
1600	1300	1750	220	**6SL3815-2LP32-8AA0-Z Y15**	⑤
1750	1450	2000	240	**6SL3815-2LP33-1AA0-Z Y15**	⑤
1950	1600	2250	270	**6SL3815-2LP33-5AA0-Z Y15**	⑤
2250	1850	2500	310	**6SL3815-2LP34-0AA0-Z Y15**	⑤
2500	2100	2750	350	**6SL3815-2LP34-5AA0-Z Y15**	⑤
2800	2350	3000	390	**6SL3815-2LP35-0AA0-Z Y15**	⑤
3100	2600	3500	430	**6SL3815-2LP35-5AA0-Z Y15**	⑤
3450	2900	4000	480	**6SL3815-2LP36-1AA0-Z Y15**	⑤
3800	3200	4250	530	**6SL3815-2LP36-7AA0-Z Y15**	⑤
4100	3450	4500	570	**6SL3815-2LP37-4AA0-Z Y15**	⑤
4500	3800	5000	625	**6SL3815-2LP38-0AA0-Z Y15**	⑤
4950	4200	5500	690	**6SL3815-2LP38-8AA0-Z Y15**	⑦
5550	4600	6000	770	**6SL3815-2LP41-0AA0-Z Y15**	⑦
6150	5100	7000	850	**6SL3815-2LP41-1AA0-Z Y15**	⑦
6700	5600	7500	930	**6SL3815-2LP41-2AA0-Z Y15**	⑦
7350	6200	8000	1020	**6SL3815-2LP41-3AA0-Z Y15**	⑦
7950	6600	9000	1100	**6SL3815-2LP41-4AA0-Z Y15**	⑦

Type rating kVA	Shaft output kW	hp	Rated output current A	SINAMICS GM150 in IGBT version, water cooling, with sine-wave filter Order No.	Circuit designs (page 2/5) Fig. No.
Output voltage 6.0 kV					
1400	1200	1500	136	**6SL3815-2LQ31-7AA0-Z Y15**	⑥
1650	1400	1750	160	**6SL3815-2LQ32-0AA0-Z Y15**	⑥
1900	1600	2000	184	**6SL3815-2LQ32-3AA0-Z Y15**	⑥
2150	1800	2250	208	**6SL3815-2LQ32-6AA0-Z Y15**	⑥
2400	2000	2500	232	**6SL3815-2LQ33-0AA0-Z Y15**	⑥
2700	2250	2750	260	**6SL3815-2LQ33-2AA0-Z Y15**	⑥
3000	2500	3000	288	**6SL3815-2LQ33-6AA0-Z Y15**	⑥
3250	2700	3500	312	**6SL3815-2LQ33-8AA0-Z Y15**	⑥
3600	3000	4000	344	**6SL3815-2LQ34-3AA0-Z Y15**	⑧
3900	3300	4500	376	**6SL3815-2LQ34-7AA0-Z Y15**	⑧
4400	3700	5000	424	**6SL3815-2LQ35-3AA0-Z Y15**	⑧
4850	4100	5500	468	**6SL3815-2LQ35-8AA0-Z Y15**	⑧
5300	4400	6000	512	**6SL3815-2LQ36-4AA0-Z Y15**	⑧
5800	4900	6500	560	**6SL3815-2LQ37-0AA0-Z Y15**	⑧
Output voltage 6.6 kV					
1550	1300	1750	136	**6SL3815-2LR31-7AA0-Z Y15**	⑥
1850	1500	2000	160	**6SL3815-2LR32-0AA0-Z Y15**	⑥
2100	1750	2250	184	**6SL3815-2LR32-3AA0-Z Y15**	⑥
2400	2000	2750	208	**6SL3815-2LR32-6AA0-Z Y15**	⑥
2650	2200	3000	232	**6SL3815-2LR33-0AA0-Z Y15**	⑥
2950	2500	3250	260	**6SL3815-2LR33-2AA0-Z Y15**	⑥
3300	2750	3500	288	**6SL3815-2LR33-6AA0-Z Y15**	⑥
3550	3000	4000	312	**6SL3815-2LR33-8AA0-Z Y15**	⑥
3950	3300	4500	344	**6SL3815-2LR34-3AA0-Z Y15**	⑧
4300	3600	4750	376	**6SL3815-2LR34-7AA0-Z Y15**	⑧
4850	4000	5000	424	**6SL3815-2LR35-3AA0-Z Y15**	⑧
5350	4500	6000	468	**6SL3815-2LR35-8AA0-Z Y15**	⑧
5850	4900	6500	512	**6SL3815-2LR36-4AA0-Z Y15**	⑧
6400	5400	7000	560	**6SL3815-2LR37-0AA0-Z Y15**	⑧

Special version **"-Z"**

The order code **Y15** (sine-wave filter) must be quoted in addition and requires plain text (see Description of options, page 5/20).

Options

When ordering a converter with options, add **"-Z"** to the order number of the converter, followed by the order code(s) for the desired option(s).

Example:

6SL3810-2LM32-5AA0-Z
+N15+L60+...

In the following tables, related options are arranged in groups. Whether the options can be combined or are mutually exclusive is indicated within these groups. A detailed description of the options can be found in the chapter Description of options.

Input-side options		**N15**	**N20**	**N21**	**N13**
24-pulse Basic Line Module	**N15**		✓	✓	✓
Capacitor trip device 110 to 120 V DC [1]	**N20**	✓		–	✓
Capacitor trip device 230 V DC [1]	**N21**	✓	–		✓
Circuit-breaker at converter input [2]	**N13**	✓	✓	✓	

1) Options **N20** and **N21** cannot be combined with option **U01** (converter version for NAFTA with UL listing).
2) Option **N13** is available on request in connection with option **U01**.

Output-side options		**L08**	**Y15**	**L29**
Output reactor	**L08**		–	✓
Sine-wave filter (plain text required)	**Y15**	–		✓
Bidirectional synchronized bypass operation	**L29**	✓	✓	

Protection functions		**L48**	**L49**	**L60**	**M10**
Grounding switch at converter input [1] (motor-operated)	**L48**		✓	✓	✓
Grounding switch at converter output [1] (motor-operated)	**L49**	✓		✓	✓
EMERGENCY STOP category 1	**L60**	✓	✓		✓
Safety closing/interlocking system	**M10**	✓	✓	✓	

1) Options **L48** and **L49** are available on request in connection with option **U01** (converter version for NAFTA with UL listing).

Temperature detection and evaluation (standard: 3 PT100 inputs)		**L80**	**L81**	**L82**	**L90**	**L91**	**L93**	**L95**
2 thermistor protection relays for alarm and fault [1]	**L80**		–	–	✓	✓	✓	✓
2 x 2 thermistor protection relays for alarm and fault [1]	**L81**	–		–	✓	✓	✓	✓
3 x 2 thermistor protection relays for alarm and fault [1]	**L82**	–	–		✓	✓	✓	✓
PT100 evaluation unit with 3 inputs [1]	**L90**	✓	✓	✓		–	–	–
2 PT100 evaluation units with 3 inputs each [1]	**L91**	✓	✓	✓	–		–	–
PT100 evaluation unit with 6 inputs, 2 analog outputs (outputs for display connected to control) [1]	**L93**	✓	✓	✓	–	–		–
PT100 evaluation unit with 6 inputs for explosion-proof motors, 2 analog outputs (outputs for display connected to control) [1] [2]	**L95**	✓	✓	✓	–	–	–	

1) Options **L..** cannot be combined with option **G61** (additional TM31 Terminal Module).
2) Option **L95** cannot be combined with option **U01** (converter version for NAFTA with UL listing).

✓	Options can be combined
–	Options are mutually exclusive

Options (continued)

Enhanced degree of protection for cabinet units in air-cooled version (standard: IP22)		M11	M42
Dust protection	M11		✓
IP42 degree of protection	M42	✓	

Enhanced degree of protection for cabinet units in water-cooled version (standard: IP43)	
IP54 degree of protection	M54

Control of auxiliaries		N30	N31	N32	N33	N35	N36	N37	N38
The contractor is switched on with the ON command at the converter and switched off with the OFF command (example: external fan on the motor). The supply voltage for the auxiliary to be powered must be provided externally.									
Controlled outgoing feeder for auxiliaries 400 V 3 AC, max. 4 kW	N30		–	–	–	✓	✓	✓	✓
Controlled outgoing feeder for auxiliaries 400 V 3 AC, max. 7 kW	N31	–		–	–	✓	✓	✓	✓
Controlled outgoing feeder for auxiliaries 400 V 3 AC, max. 11 kW	N32	–	–		–	✓	✓	✓	✓
Controlled outgoing feeder for auxiliaries 400 V 3 AC, max. 15 kW	N33	–	–	–		✓	✓	✓	✓
The contractor is switched off with the ON command at the converter and switched on with the OFF command (example: heater). The supply voltage for the auxiliary to be powered must be provided externally.									
Controlled outgoing feeder for auxiliaries 230 V 1 AC, max. 1 kW	N35	✓	✓	✓	✓		–	–	–
Controlled outgoing feeder for auxiliaries 230 V 1 AC, max. 2 kW	N36	✓	✓	✓	✓	–		–	–
Controlled outgoing feeder for auxiliaries 230 V 1 AC, max. 3 kW	N37	✓	✓	✓	✓	–	–		–
Controlled outgoing feeder for auxiliaries 230 V 1 AC, max. 4 kW	N38	✓	✓	✓	✓	–	–	–	

Design of air cooling		M61	M64
Redundant fan in power section	M61		–
Converter prepared for connection to an external exhaust air system, with internal cabinet fans	M64	–	

Connection of power and signal cables (standard: connection of power cables from bottom, connection of signal cables directly to the terminals of the Terminal Modules)		M13	M78	M32	M33	M34
Connection of power cables to converter input from top	M13		✓	✓	✓	✓
Connection of power cables to converter output from top	M78	✓		✓	✓	✓
Customer's terminal block with cage clamp terminals for signal cables up to 2.5 mm^2	M32	✓	✓		–	✓
Customer's terminal block with screw terminals for signal cables up to 2.5 mm^2	M33	✓	✓	–		✓
Connection of auxiliary voltage and signal cables from top	M34	✓	✓	✓	✓	

Control and display instruments in the door of the control cabinet		K20	K21	K22
Signal lamps and start/stop button in the cabinet door	K20		–	–
Display instruments in the cabinet door for voltage, current, speed and power also including signal lamps and start/stop button	K21	–		–
Display instruments in the cabinet door for current, speed, power and winding temperature also including signal lamps and start/stop button	K22	–	–	

✓	Options can be combined
–	Options are mutually exclusive

Options (continued)

Interface modules for connection to external bus systems (standard: PROFIBUS (slave))		G20	G21	G22	G23	G24	G25
CAN bus interface (CANopen, on request)	G20		–	–	–	–	–
Modbus Plus interface	G21	–		–	–	–	–
Modbus RTU slave interface	G22	–	–		–	–	–
DeviceNet interface	G23	–	–	–		–	–
PROFINET interface (on request)	G24	–	–	–	–		–
Teleservice connection (on request)	G25	–	–	–	–	–	

Interface modules for additional customer connections and speed encoders		G61	G62	G63	K50
Additional TM31 Terminal Module [1]	G61		✓	✓	✓
Second additional TM31 Terminal Module [1]	G62	✓		✓	✓
Additional TM15 Terminal Module	G63	✓	✓		✓
SMC30 Sensor Module Cabinet-Mounted	K50	✓	✓	✓	

1) For exclusions of options **G61** and **G62**, see Description of options.

Additional analog inputs/outputs (isolated)		E86	E87
Additional analog inputs (isolated) [1]	E86		✓
Additional analog outputs (isolated) [1]	E87	✓	

1) Options **E86** and **E87** cannot be combined with option **G62** (second additional TM31 Terminal Module).

Industry-specific options		B00	M66
NAMUR terminal block	B00		✓
Marine version with type certificate	M66	✓	

Individual certification of the converters for use on ships (contains option M66)		E11	E21	E31	E51	E61	E71
Marine version with individual certificate from Germanische Lloyd (GL)	E11		–	–	–	–	–
Marine version with individual certificate from Lloyds Register (LR)	E21	–		–	–	–	–
Marine version with individual certificate from Bureau Veritas (BV), requires option **Y75** (other auxiliary voltage supply)	E31	–	–		–	–	–
Marine version with individual certificate from Det Norske Veritas (DNV)	E51	–	–	–		–	–
Marine version with individual certificate from the American Bureau of Shipping (ABS)	E61	–	–	–	–		–
Marine version with individual certificate from the Chinese Classification Society (CCS)	E71	–	–	–	–	–	

✓	Options can be combined
–	Options are mutually exclusive

Options (continued)

Functional options		E01	E02	L32
Control for separately excited synchronous motors with slip-ring excitation [1]	E01		–	✓
Control for separately excited synchronous motors with brushless reverse field excitation [1]	E02	–		✓
Automatic restart	L32	✓	✓	

1) Options **E01** and **E02** are available on request in connection with option **U01** (converter version for NAFTA with UL listing).

Documentation (standard: PDF format in English on CD-ROM)		D00	D02	D15	D56	D72	D77	D78	D84	D92	Y10
Documentation in German	D00		✓	✓	–	–	–	–	–	–	✓
Circuit diagrams, terminal diagrams and dimension drawings in DXF format [1]	D02	✓		✓	✓	✓	✓	✓	✓	✓	✓
One set of printed documentation (multiple orders possible)	D15	✓	✓		✓	✓	✓	✓	✓	✓	✓
Documentation in Russian (on request)	D56	–	✓	✓		–	–	–	–	–	✓
Documentation in Italian (on request)	D72	–	✓	✓	–		–	–	–	–	✓
Documentation in French (on request)	D77	–	✓	✓	–	–		–	–	–	✓
Documentation in Spanish	D78	–	✓	✓	–	–	–		–	–	✓
Documentation in Chinese	D84	–	✓	✓	–	–	–	–		–	✓
Documentation in Japanese (on request)	D92	–	✓	✓	–	–	–	–	–		✓
Circuit diagrams with customer-specific description field (plain text required) [1]	Y10	✓	✓	✓	✓	✓	✓	✓	✓	✓	

1) The equipment-specific documents (circuit diagrams etc.) are available only in English/German.

Rating plate language (standard: English/German)		T58	T60	T80	T85	T90	T91
Rating plate in English/French	T58		–	–	–	–	–
Rating plate in English/Spanish	T60	–		–	–	–	–
Rating plate in English/Italian	T80	–	–		–	–	–
Rating plate in English/Russian (on request)	T85	–	–	–		–	–
Rating plate in English/Japanese (on request)	T90	–	–	–	–		–
Rating plate in English/Chinese (on request)	T91	–	–	–	–	–	

Auxiliary voltage supply	
Auxiliary voltage other than 400 V 3 AC (primary voltage and frequency must be indicated in plain text)	Y75

✓	Options can be combined
–	Options are mutually exclusive

Options (continued)

Version for NAFTA (SINAMICS GM150 in air-cooled IGBT version; 2.3 kV, 3.3 kV, 4.16 kV)		U01
Converter version for NAFTA with UL listing	U01	
Following options are included as standard in option **U01**:		
Safety closing/interlocking system	M10	
Dust protection	M11	
Rating plate language English/French	T58	
Following options cannot be combined with option **U01**:		
Capacitor trip devices	N20 and N21	–
PT100 evaluation unit with 6 inputs for explosion-proof motors, 2 analog outputs (outputs for display connected to control)	L95	–
Following options are available in connection with option **U01** on special request:		
Circuit-breakers at converter input	N13	
Grounding switch	L48 and L49	
Control for separately excited synchronous motors	E01 and E02	
UPS for power supply of the control	L53	

Converter acceptance tests in presence of customer		F03	F73	F77	F97
Visual acceptance of converter	F03		–	–	–
Functional acceptance of converter with inductive load	F73	–		✓	–
Acceptance of insulation test of the converter [1]	F77	–	✓		–
Customer-specific converter acceptance tests (on request)	F97	–	–	–	

1) Option **F77** can only be ordered in connection with option **F73**.

Cooling unit (water-cooled converter, standard: cooling unit with one stainless steel plate-type heat exchanger)		W02	W11	W12	W14	W20	Y40
Cooling unit with redundant stainless steel plate-type heat exchangers	W02		–	–	–	✓	–
Cooling unit with one titanium plate-type heat exchanger	W11	–		–	–	✓	–
Cooling unit with redundant titanium plate-type heat exchangers	W12	–	–		–	✓	–
Converter without cooling unit (plant scope)	W14	–	–	–		–	–
Raw-water connection from bottom	W20	✓	✓	✓	–		✓
Raw-water data deviates from technical data (on request) [1]	Y40	–	–	–	–	✓	

1) Option **Y40** includes a cooling system which is adapted to the raw-water data according to the customer's specifications.

Other options		L50	L53	L55	Y09
Cabinet lighting and service socket outlet in control section	L50		✓	✓	✓
UPS for power supply of control [1]	L53	✓		✓	✓
Anti-condensation heating for cabinet	L55	✓	✓		✓
Special paint finish according to RAL .... (in a color other than RAL 7035; plain text required)	Y09	✓	✓	✓	

1) Option **L53** is available on request in connection with option **U01** (converter version for NAFTA with UL listing).

✓	Options can be combined
–	Options are mutually exclusive

Technical data

General technical data	
Power components	Diodes, 3.3 kV or 6.5 kV IGBTs
Line-side converter	
• Standard	- Smaller power ranges at 2.3 kV to 4.16 kV: 12-pulse diode rectifier (Basic Line Module) - 6.0 kV and 6.6 kV as well as higher power ranges at 2.3 kV to 4.16 kV: 24-pulse diode rectifier (Basic Line Module)
• Option	- Smaller power ranges at 2.3 kV to 4.16 kV: 24-pulse diode rectifier (Basic Line Module)
Motor-side converter	Inverter (Motor Module)
Closed-loop control	Closed-loop vector control
Drive quadrants	2 (driving 2 directions of rotation)
Isolation of power section/ controller and closed-loop control	Optical conductor, isolating transformer
Auxiliary current supply (for fans, coolant pumps, precharging the DC link capacitors, controller and closed-loop control)	• 230 V 1 AC ±10%, 50/60 Hz ±3% and • 400 V 3 AC ±10%, 50/60 Hz ±3% or another auxiliary voltage (option **Y75**)
Installation altitude	≤ 1000 m above sea level: no derating > 1000 m to 4000 m above sea level: current derating required > 2000 m to 4000 m above sea level: additionally voltage derating required
Insulation	In accordance with to DIN EN 50178/VDE 0160 (IEC 62103): pollution degree 2 (without conductive pollution), condensation not permitted
Degree of protection	In accordance with to EN 60529/VDE 0470 T1 (IEC 60529):
• Standard	IP22 (air cooling), IP43 (water cooling)
• Option	IP42 (air cooling), IP54 (water cooling)
Protection class	In accordance with to DIN EN 61140/VDE 0140 T1 (IEC 61140): 1
Shock protection	BGV A 3
Interference transmission	In accordance with to DIN EN 61800-3/VDE 0160 T100 (IEC 61800-3): no RI suppression
Paint finish/color	Indoor requirements/RAL 7035, light gray
Compliance with standards	
• Standards	- EN 61800-3/VDE 0160 T100 (IEC 61800-3) - EN 61800-4/VDE 0160 T104 (IEC 61800-4) - EN 61800-5-1/VDE 0160 T105 (IEC 61800-5-1) - EN 60146-1-1/VDE 0558 T11 (IEC 60146-1-1) - EN 50178/VDE 0160 T100 (IEC 62103) - EN 60204-11/VDE 0113 T11 (IEC 60204-11)
• EU directives	- 98/37/EC + amendments (machinery directive) - 89/336/EEC + amendments (electromagnetic compatibility)
Air cooling	Air cooling enhanced with integrated fans
Water cooling	Water-water cooling unit, internal circuit, deionized water
Permitted coolant temperature (raw-water)	
• Inlet	+5 °C to +35 °C
• Outlet	max. +40 °C

Rated data					
Output voltage	**2.3 kV**	**3.3 kV**	**4.16 kV**	**6.0 kV**	**6.6 kV**
Input voltage	2 x 1.2 kV	2 x 1.7 kV	2 x 2.2 kV	2 × 2 × 1.55 kV	2 × 2 × 1.7 kV
Tolerance of input voltage	±10%	±10%	±10%	±10%	±10%
Line frequency	50/60 Hz ±3%	50/60 Hz ±3%	50/60 Hz ±3%	50/60 Hz ±3%	50/60 Hz ±3%
Line factor fundamental mode	> 0.96	> 0.96	> 0.96	> 0.96	> 0.96

Technical data (continued)

	Operation of induction motors				Operation of separately excited synchronous motors	
	without speed encoder		with speed encoder		with speed encoder	
	without sine-wave filter	with sine-wave filter	without sine-wave filter	with sine-wave filter	without sine-wave filter	with sine-wave filter
Control properties						
Operating range						
• Lower limit of speed control range (% of rated motor speed)	5%	5%	0%	0%	0%	0%
• Max. permissible output frequency	250 Hz	66 Hz	250 Hz	66 Hz	90 Hz	66 Hz
• Field weakening range	1:3	1:1,1	1:3	1:1,1	1:4	1:1,1
Stationary operation						
• Speed accuracy (% of rated motor speed)	±0.2% (from 5% rated speed)	±0.2% (from 5% rated speed)	±0.01%	±0.01%	±0.01%	±0.01%
• Torque accuracy (% of rated torque)	±5% (from 5% rated speed)	±5% (from 5% rated speed)	±5%	±5%	±2%	±5%
Dynamic operation						
• Torque rise time	5 ms	20 ms	5 ms	20 ms	5 ms	20 ms

	Storage	Transport	Operation
Climatic ambient conditions			
Ambient temperature	+5 °C to +45 °C	–25 °C to +70 °C	+5 °C to +40 °C
Relative air humidity	5% to 95% (only slight condensation permitted; converter must be completely dry before commissioning)	5% to 75%	5% to 85% (condensation not permitted)
Other climatic conditions in accordance with class	1K3 in acc. with EN 60721-3-1 (IEC 60721-3-1) (formation of ice not permitted)	2K2 in acc. with EN 60721-3-2 (IEC 60721-3-2)	3K3 in acc. with EN 60721-3-3 (IEC 60721-3-3)
Degree of pollution	2 without conductive pollution in acc. with EN 50178/VDE 0160 (IEC 62103)	2 without conductive pollution in acc. with EN 50178/VDE 0160 (IEC 62103)	2 without conductive pollution in acc. with EN 50178/VDE 0160 (IEC 62103)
Mechanical ambient conditions			
Stationary vibration, sinusoidal			
• Displacement	1.5 mm at 2 Hz to 9 Hz	3.5 mm at 2 Hz to 9 Hz	0.3 mm at 2 Hz to 9 Hz
• Acceleration	5 m/s^2 at 9 Hz to 200 Hz	10 m/s^2 at 9 Hz to 200 Hz 15 m/s^2 at 200 Hz to 500 Hz	1 m/s^2 at 9 Hz to 200 Hz
Other mechanical conditions in accordance with class (greater strength for marine version)	1M2 in acc. with EN 60721-3-1 (IEC 60721-3-1)	2M2 in acc. with EN 60721-3-2 (IEC 60721-3-2)	3M1 in acc. with EN 60721-3-3 (IEC 60721-3-3)
Other ambient conditions			
Biological ambient conditions in accordance with class	1B1 in acc. with EN 60721-3-1 (IEC 60721-3-1)	2B1 in acc. with EN 60721-3-2 (IEC 60721-3-2)	3B2 in acc. with EN 60721-3-3 (IEC 60721-3-3) (without harmful flora)
Chemically active substances in accordance with class	1C1 in acc. with EN 60721-3-1 (IEC 60721-3-1)	2C1 in acc. with EN 60721-3-2 (IEC 60721-3-2)	3C2 in acc. with EN 60721-3-3 (IEC 60721-3-3) (no occurrence of salt mist)
Mechanically active substances in accordance with class	1S1 in acc. with EN 60721-3-1 (IEC 60721-3-1)	2S1 in acc. with EN 60721-3-2 (IEC 60721-3-2)	3S1 in acc. with EN 60721-3-3 (IEC 60721-3-3) (3S3 with water cooling and degree of protection IP54)

Note: The values specified under storage and transport apply to unpacked converters.

Technical data (continued)

Installation conditions and derating data

Current derating

If the converters are operated at installation altitudes > 1000 m above sea level or under ambient or coolant temperatures > 40 °C with air cooling or > 35 °C with water cooling, derating factors k_H and k_T must be taken into account for the rated current (DIN 43671).

Note:

The following applies for water-cooled versions:
When determining the current derating factor, it is essential to consider the ambient temperature as well as the air pressure of the raw-water in the inlet, as components such as the link bus-bars are also subject to air cooling.

This requires the factors k_H and k_T to be determined from the diagrams for air cooling as well as for water cooling. The smaller of the two products ($k_H \times k_T$) must be used as the current derating factor.

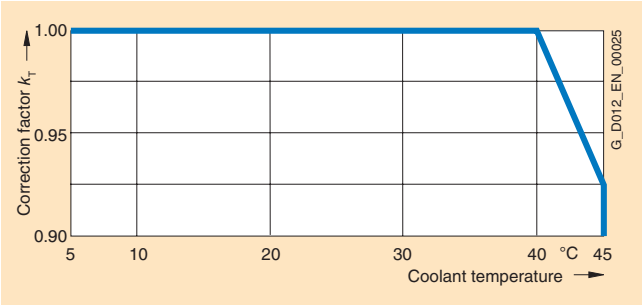

Derating factor k_T with air cooling

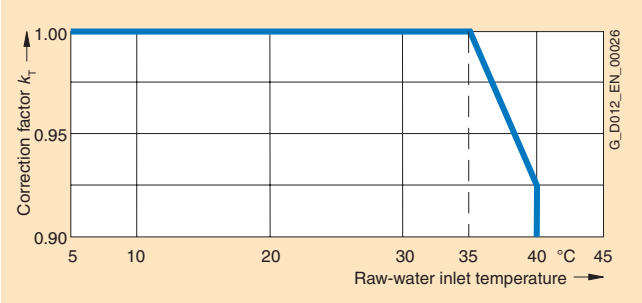

Derating factor k_T with water cooling

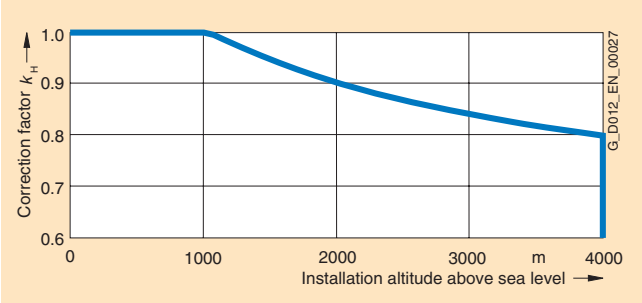

Derating factor k_H with air cooling

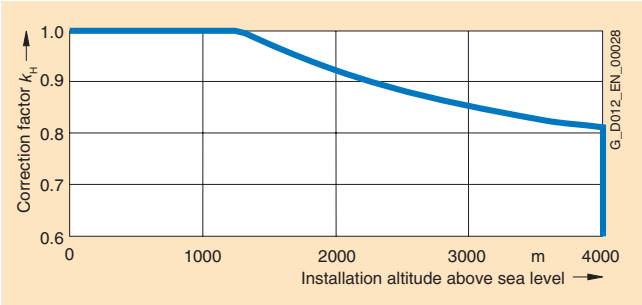

Derating factor k_H with water cooling

For the permitted continuous current I: $I \leq I_{rated} \times k_H \times k_T$

I: permitted continuous current
I_{rated}: rated current

Voltage derating

At installation altitudes > 2000 m, a voltage derating is required in addition to a current derating (EN 60664-1/VDE 0110 (IEC 60664-1)). This depends on the air and creepage distances in the unit.

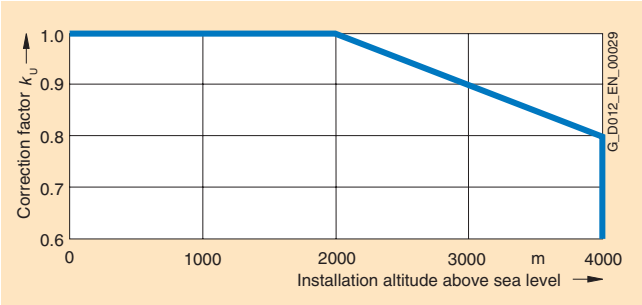

Derating factor k_U

Technical data (continued)

The technical data from the following examples can be found on page 2/21 onwards.

Example 1

Converter 6SL3810-2LP33-0AA0 (air-cooled version)

Output voltage: 4.16 kV

Input voltage: 2 x 2.2 kV

Type rating: 2200 kVA, 300 A

Installation altitude: 3000 m

Max. ambient temperature: 30 °C
- Derating factor k_H = 0.84
- Derating factor k_T = 1.0
- Derating factor k_U = 0.9

$I \leq I_{rated} \times 0.84 \times 1.0 = I_{rated} \times 0.84$

This means that a voltage derating of 10% is required in addition to a current derating of 16%.

The maximum available output current of the converter is 252 A.

The converter can still be operated at a line voltage of 2 x 1.98 kV 3 AC.

Example 2

Converter 6SL3815-2LN33-5AA0 (water-cooled version)

Output voltage: 3.3 kV

Input voltage: 2 x 1.7 kV

Type rating: 2000 kVA, 350 A

Installation altitude: 2000 m

Max. ambient temperature: 40 °C

Raw-water inlet temperature: 40 °C

- Ambient temperature:
  - Derating factor k_H = 0.9
  - Derating factor k_T = 1.0
  - Derating factor k_U = 1.0
- Raw-water inlet temperature:
  - Derating factor k_H = 0.925
  - Derating factor k_T = 0.925
  - Derating factor k_U = 1.0

The smaller value for $k_H \times k_T$ results in this case from the diagrams for the raw-water in the inlet.

$I \leq I_{rated} \times 0.925 \times 0.925 = I_{rated} \times 0.856$

A current derating of 14.4% is required.

The maximum available output current of the converter is 299 A.

Example 3

Converter 6SL3815-2LN33-5AA0 (water-cooled version)

Output voltage: 3.3 kV

Input voltage: 2 x 1.7 kV

Type rating: 2000 kVA, 350 A

Installation altitude: 2000 m

Max. ambient temperature: 43 °C

Raw-water inlet temperature: 30 °C

- Ambient temperature
  - Derating factor k_H = 0.9
  - Derating factor k_T = 0.955
  - Derating factor k_U = 1.0
- Raw-water inlet temperature:
  - Derating factor k_H = 0.925
  - Derating factor k_T = 1.0
  - Derating factor k_U = 1.0

The smaller value for $k_H \times k_T$ results in this case from the diagrams for the ambient temperature.

$I \leq I_{rated} \times 0.9 \times 0.955 = I_{rated} \times 0.86$

A current derating of 14% is required.

The maximum available output current of the converter is 301 A.

Technical data (continued)

SINAMICS GM150 in IGBT version Air cooling, without sine-wave filter	Type	6SL3810-2LM32-5AA0	6SL3810-2LM33-0AA0	6SL3810-2LM33-5AA0	6SL3810-2LM34-0AA0
Output voltage 2.3 kV					
Type rating	kVA	1000	1200	1400	1600
Shaft output [1]	kW	820	1000	1150	1300
	hp	1000	1250	1500	1750
Rated output current	A	250	300	350	400
Input voltage	kV	2 × 1.2	2 × 1.2	2 × 1.2	2 × 1.2
Rated input current [1]	A	2 × 220	2 × 264	2 × 308	2 × 351
Power loss [2]	kW	15	18	21	24
Efficiency [2]	%	98.3	98.3	98.3	98.3
Max. current requirement of auxiliary supply 50/60 Hz 230 V AC	A	10	10	10	10
Max. current requirement of auxiliary supply 50/60 Hz 400 V 3 AC [3]	A	27	27	27	27
Cooling air requirement	m^3/s	1.6	1.6	1.6	1.6
Sound pressure level L_{pA}	dB(A)	78	80	80	80
Measuring surface level L_s	dB(A)	18	18	18	18
Cable cross-sections, line-side, max. connectable per phase [4]	mm^2 (DIN VDE)	2 × 240	2 × 240	2 × 240	2 × 240
	AWG/MCM (NEC, CEC)	2 × 500 MCM	2 × 500 MCM	2 × 500 MCM	2 × 500 MCM
Cable cross-sections, motor-side, max. connectable per phase [4]	mm^2 (DIN VDE)	2 × 240	2 × 240	2 × 240	2 × 240
	AWG/MCM (NEC, CEC)	2 × 500 MCM	2 × 500 MCM	2 × 500 MCM	2 × 500 MCM
PE connection, max. connection cross-section at enclosure with M12 screw [4]	mm^2 (DIN VDE)	2 × 240	2 × 240	2 × 240	2 × 240
	AWG/MCM (NEC, CEC)	2 × 500 MCM	2 × 500 MCM	2 × 500 MCM	2 × 500 MCM
Degree of protection		IP22	IP22	IP22	IP22
Dimensions (with cabinet doors and side panels)					
• Width	mm	2420	2420	2420	2420
• Height	mm	2570	2570	2570	2570
• Depth	mm	1275	1275	1275	1275
Circuit design (page 2/4)		①	①	①	①
Weight	kg	1750	1750	1750	1750

1) The figures for the rated input current and the power figures in hp and kW are approximate values which were determined for operation with induction motors and for a typical value of the cos phi power factor and efficiency of the motor. The hp figures are based on the NEC and CEC directives for the North American market. The kW values are quoted in steps which can be divided by 50.
Both approximate values need to be adapted to the motor which is actually used.

2) Without cooling system.

3) Plus 20 A precharging current for 25 s.

4) Figures refer to a subsystem; please refer to “Circuit designs” for the number of subsystems to be connected on the line and motor side.

Technical data (continued)

SINAMICS GM150 in IGBT version Air cooling, without sine-wave filter	Type	6SL3810-2LM34-5AA0	6SL3810-2LM35-0AA0	6SL3810-2LM35-5AA0	6SL3810-2LM36-0AA0
Output voltage 2.3 kV					
Type rating	kVA	1800	2000	2200	2400
Shaft output [1]	kW	1500	1650	1800	2000
	hp	2000	2250	2500	2750
Rated output current	A	450	500	550	600
Input voltage	kV	2 × 1.2	2 × 1.2	2 × 1.2	2 × 1.2
Rated input current	A	2 × 395	2 × 444	2 × 494	2 × 539
Power loss [2]	kW	27	28	31	34
Efficiency [2]	%	98.3	98.4	98.4	98.4
Max. current requirement of auxiliary supply 50/60 Hz 230 V AC	A	10	10	10	10
Max. current requirement of auxiliary supply 50/60 Hz 400 V 3 AC [3]	A	27	27	27	27
Cooling air requirement	m^3/s	1.6	1.6	1.6	1.6
Sound pressure level L_{pA}	dB(A)	78	80	80	80
Measuring surface level L_s	dB(A)	18	18	18	18
Cable cross-sections, line-side, max. connectable per phase [4]	mm^2 (DIN VDE)	2 × 240	2 × 240	2 × 240	2 × 240
	AWG/MCM (NEC, CEC)	2 × 500 MCM	2 × 500 MCM	2 × 500 MCM	2 × 500 MCM
Cable cross-sections, motor-side, max. connectable per phase [4]	mm^2 (DIN VDE)	2 × 240	2 × 240	2 × 240	2 × 240
	AWG/MCM (NEC, CEC)	2 × 500 MCM	2 × 500 MCM	2 × 500 MCM	2 × 500 MCM
PE connection, max. connection cross-section at enclosure with M12 screw [4]	mm^2 (DIN VDE)	2 × 240	2 × 240	2 × 240	2 × 240
	AWG/MCM (NEC, CEC)	2 × 500 MCM	2 × 500 MCM	2 × 500 MCM	2 × 500 MCM
Degree of protection		IP22	IP22	IP22	IP22
Dimensions (with cabinet doors and side panels)					
• Width	mm	2420	2420	2420	2420
• Height	mm	2570	2570	2570	2570
• Depth	mm	1275	1275	1275	1275
Circuit design (page 2/4)		①	①	①	①
Weight	kg	1750	1750	1800	1800

1) The figures for the rated input current and the power figures in hp and kW are approximate values which were determined for operation with induction motors and for a typical value of the cos phi power factor and efficiency of the motor. The hp figures are based on the NEC and CEC directives for the North American market. The kW values are quoted in steps which can be divided by 50.
Both approximate values need to be adapted to the motor which is actually used.

2) Without cooling system.

3) Plus 20 A precharging current for 25 s.

4) Figures refer to a subsystem; please refer to “Circuit designs” for the number of subsystems to be connected on the line and motor side.

Technical data (continued)

SINAMICS GM150 in IGBT version Air cooling, without sine-wave filter	Type	6SL3810-2LN31-8AA0	6SL3810-2LN32-2AA0	6SL3810-2LN32-6AA0	6SL3810-2LN33-0AA0	6SL3810-2LN33-5AA0	6SL3810-2LN34-0AA0
Output voltage 3.3 kV							
Type rating	kVA	1000	1300	1500	1700	2000	2300
Shaft output [1]	kW	850	1050	1250	1400	1650	1900
	hp	1000	1250	1500	2000	2250	2500
Rated output current	A	180	220	260	300	350	400
Input voltage	kV	2 × 1.7	2 × 1.7	2 × 1.7	2 × 1.7	2 × 1.7	2 × 1.7
Rated input current	A	2 × 153	2 × 199	2 × 230	2 × 260	2 × 309	2 × 360
Power loss [2]	kW	15	20	23	26	28	32
Efficiency [2]	%	98.3	98.2	98.2	98.3	98.4	98.4
Max. current requirement of auxiliary supply 50/60 Hz 230 V AC	A	10	10	10	10	10	10
Max. current requirement of auxiliary supply 50/60 Hz 400 V 3 AC [3]	A	27	27	27	27	27	27
Cooling air requirement	m^3/s	2.4	2.4	2.4	2.4	2.4	2.4
Sound pressure level L_{pA}	dB(A)	78	78	78	80	80	80
Measuring surface level L_s	dB(A)	18	18	18	18	18	18
Cable cross-sections, line-side, max. connectable per phase [4]	mm^2 (DIN VDE)	2 × 240	2 × 240	2 × 240	2 × 240	2 × 240	2 × 240
	AWG/MCM (NEC, CEC)	2 × 500 MCM	2 × 500 MCM	2 × 500 MCM	2 × 500 MCM	2 × 500 MCM	2 × 500 MCM
Cable cross-sections, motor-side, max. connectable per phase [4]	mm^2 (DIN VDE)	2 × 240	2 × 240	2 × 240	2 × 240	2 × 240	2 × 240
	AWG/MCM (NEC, CEC)	2 × 500 MCM	2 × 500 MCM	2 × 500 MCM	2 × 500 MCM	2 × 500 MCM	2 × 500 MCM
PE connection, max. connection cross-section at enclosure with M12 screw [4]	mm^2 (DIN VDE)	2 × 240	2 × 240	2 × 240	2 × 240	2 × 240	2 × 240
	AWG/MCM (NEC, CEC)	2 × 500 MCM	2 × 500 MCM	2 × 500 MCM	2 × 500 MCM	2 × 500 MCM	2 × 500 MCM
Degree of protection		IP22	IP22	IP22	IP22	IP22	IP22
Dimensions (with cabinet doors and side panels)							
• Width	mm	2420	2420	2420	2420	2420	2420
• Height	mm	2570	2570	2570	2570	2570	2570
• Depth	mm	1275	1275	1275	1275	1275	1275
Circuit design (page 2/4)		①	①	①	①	①	①
Weight	kg	1900	1900	1900	1900	1900	1950

1) The figures for the rated input current and the power figures in hp and kW are approximate values which were determined for operation with induction motors and for a typical value of the cos phi power factor and efficiency of the motor. The hp figures are based on the NEC and CEC directives for the North American market. The kW values are quoted in steps which can be divided by 50.
Both approximate values need to be adapted to the motor which is actually used.

2) Without cooling system.

3) Plus 20 A precharging current for 25 s.

4) Figures refer to a subsystem; please refer to “Circuit designs” for the number of subsystems to be connected on the line and motor side.

Technical data (continued)

SINAMICS GM150 in IGBT version Air cooling, without sine-wave filter	Type	6SL3810-2LN34-5AA0	6SL3810-2LN35-0AA0	6SL3810-2LN35-5AA0	6SL3810-2LN36-0AA0
Output voltage 3.3 kV					
Type rating	kVA	2600	2900	3100	3400
Shaft output [1]	kW	2150	2400	2650	2850
	hp	3000	3250	3500	3750
Rated output current	A	450	500	550	600
Input voltage	kV	2 × 1.7	2 × 1.7	2 × 1.7	2 × 1.7
Rated input current	A	2 × 406	2 × 453	2 × 484	2 × 531
Power loss [2]	kW	34	38	40	44
Efficiency [2]	%	98.5	98.5	98.6	98.6
Max. current requirement of auxiliary supply 50/60 Hz 230 V AC	A	10	10	10	10
Max. current requirement of auxiliary supply 50/60 Hz 400 V 3 AC [3]	A	27	27	27	27
Cooling air requirement	m^3/s	2.4	2.4	2.4	2.4
Sound pressure level L_{pA}	dB(A)	78	80	80	80
Measuring surface level L_s	dB(A)	18	18	18	18
Cable cross-sections, line-side, max. connectable per phase [4]	mm^2 (DIN VDE)	2 × 240	2 × 240	2 × 240	2 × 240
	AWG/MCM (NEC, CEC)	2 × 500 MCM	2 × 500 MCM	2 × 500 MCM	2 × 500 MCM
Cable cross-sections, motor-side, max. connectable per phase [4]	mm^2 (DIN VDE)	2 × 240	2 × 240	2 × 240	2 × 240
	AWG/MCM (NEC, CEC)	2 × 500 MCM	2 × 500 MCM	2 × 500 MCM	2 × 500 MCM
PE connection, max. connection cross-section at enclosure with M12 screw [4]	mm^2 (DIN VDE)	2 × 240	2 × 240	2 × 240	2 × 240
	AWG/MCM (NEC, CEC)	2 × 500 MCM	2 × 500 MCM	2 × 500 MCM	2 × 500 MCM
Degree of protection		IP22	IP22	IP22	IP22
Dimensions (with cabinet doors and side panels)					
• Width	mm	2420	2420	2420	2420
• Height	mm	2570	2570	2570	2570
• Depth	mm	1275	1275	1275	1275
Circuit design (page 2/4)		①	①	①	①
Weight	kg	1950	1950	2000	2000

1) The figures for the rated input current and the power figures in hp and kW are approximate values which were determined for operation with induction motors and for a typical value of the cos phi power factor and efficiency of the motor. The hp figures are based on the NEC and CEC directives for the North American market. The kW values are quoted in steps which can be divided by 50.
Both approximate values need to be adapted to the motor which is actually used.

2) Without cooling system.

3) Plus 20 A precharging current for 25 s.

4) Figures refer to a subsystem; please refer to “Circuit designs” for the number of subsystems to be connected on the line and motor side.

Technical data (continued)

SINAMICS GM150 in IGBT version Air cooling, without sine-wave filter	Type	6SL3810-2LN36-6AA0	6SL3810-2LN37-2AA0	6SL3810-2LN38-1AA0	6SL3810-2LN38-8AA0	6SL3810-2LN41-0AA0	6SL3810-2LN41-1AA0
Output voltage 3.3 kV							
Type rating	kVA	3800	4100	4600	5100	5700	6300
Shaft output [1]	kW	3100	3400	3900	4300	4800	500
	hp	4000	4500	5000	6000	6500	7000
Rated output current	A	2 × 330	2 × 360	2 × 405	2 × 450	2 × 500	2 × 550
Input voltage	kV	2 × (2 × 1.7)	2 × (2 × 1.7)	2 × (2 × 1.7)	2 × (2 × 1.7)	2 × (2 × 1.7)	2 × (2 × 1.7)
Rated input current	A	2 × (2 × 297)	2 × (2 × 321)	2 × (2 × 360)	2 × (2 × 399)	2 × (2 × 446)	2 × (2 × 492)
Power loss [2]	kW	49	53	60	66	74	82
Efficiency [2]	%	98.6	98.6	98.5	98.6	98.5	98.5
Max. current requirement of auxiliary supply 50/60 Hz 230 V AC	A	10	10	10	10	10	10
Max. current requirement of auxiliary supply 50/60 Hz 400 V 3 AC [3]	A	54	54	54	54	54	54
Cooling air requirement	m^3/s	4.7	4.7	4.7	4.7	4.7	4.7
Sound pressure level L_{pA}	dB(A)	85	85	85	85	85	85
Measuring surface level L_s	dB(A)	19	19	19	19	19	19
Cable cross-sections, line-side, max. connectable per phase [4]	mm^2 (DIN VDE)	2 × 240	2 × 240	2 × 240	2 × 240	2 × 240	2 × 240
	AWG/MCM (NEC, CEC)	2 × 500 MCM	2 × 500 MCM	2 × 500 MCM	2 × 500 MCM	2 × 500 MCM	2 × 500 MCM
Cable cross-sections, motor-side, max. connectable per phase [4]	mm^2 (DIN VDE)	2 × 240	2 × 240	2 × 240	2 × 240	2 × 240	2 × 240
	AWG/MCM (NEC, CEC)	2 × 500 MCM	2 × 500 MCM	2 × 500 MCM	2 × 500 MCM	2 × 500 MCM	2 × 500 MCM
PE connection, max. connection cross-section at enclosure with M12 screw [4]	mm^2 (DIN VDE)	2 × 240	2 × 240	2 × 240	2 × 240	2 × 240	2 × 240
	AWG/MCM (NEC, CEC)	2 × 500 MCM	2 × 500 MCM	2 × 500 MCM	2 × 500 MCM	2 × 500 MCM	2 × 500 MCM
Degree of protection		IP22	IP22	IP22	IP22	IP22	IP22
Dimensions (with cabinet doors and side panels)							
• Width	mm	4220	4220	4220	4220	4220	4220
• Height	mm	2570	2570	2570	2570	2570	2570
• Depth	mm	1275	1275	1275	1275	1275	1275
Circuit design (page 2/4)		③	③	③	③	③	③
Weight	kg	3500	3600	3600	3600	3700	3700

1) The figures for the rated input current and the power figures in hp and kW are approximate values which were determined for operation with induction motors and for a typical value of the cos phi power factor and efficiency of the motor. The hp figures are based on the NEC and CEC directives for the North American market. The kW values are quoted in steps which can be divided by 50.
Both approximate values need to be adapted to the motor which is actually used.

2) Without cooling system.

3) Plus 20 A precharging current for 25 s.

4) Figures refer to a subsystem; please refer to “Circuit designs” for the number of subsystems to be connected on the line and motor side.

Technical data (continued)

SINAMICS GM150 in IGBT version Air cooling, without sine-wave filter	Type	6SL3810-2LP31-8AA0	6SL3810-2LP32-2AA0	6SL3810-2LP32-6AA0	6SL3810-2LP33-0AA0	6SL3810-2LP33-5AA0	6SL3810-2LP34-0AA0
Output voltage 4.16 kV							
Type rating	kVA	1300	1600	1900	2200	2500	2900
Shaft output [1]	kW	1000	1300	1550	1800	2100	2400
	hp	1500	1750	2000	2500	3000	3250
Rated output current	A	180	220	260	300	350	400
Input voltage	kV	2 × 2.2	2 × 2.2	2 × 2.2	2 × 2.2	2 × 2.2	2 × 2.2
Rated input current	A	2 × 158	2 × 194	2 × 233	2 × 273	2 × 310	2 × 359
Power loss [2]	kW	20	24	27	31	33	38
Efficiency [2]	%	98.2	98.3	98.4	98.4	98.5	98.5
Max. current requirement of auxiliary supply 50/60 Hz 230 V AC	A	10	10	10	10	10	10
Max. current requirement of auxiliary supply 50/60 Hz 400 V 3 AC [3]	A	27	27	27	27	27	27
Cooling air requirement	m^3/s	2.4	2.4	2.4	2.4	2.4	2.4
Sound pressure level L_{pA}	dB(A)	78	78	78	80	80	80
Measuring surface level L_s	dB(A)	18	18	18	18	18	18
Cable cross-sections, line-side, max. connectable per phase [4]	mm^2 (DIN VDE)	2 × 240	2 × 240	2 × 240	2 × 240	2 × 240	2 × 240
	AWG/MCM (NEC, CEC)	2 × 500 MCM	2 × 500 MCM	2 × 500 MCM	2 × 500 MCM	2 × 500 MCM	2 × 500 MCM
Cable cross-sections, motor-side, max. connectable per phase [4]	mm^2 (DIN VDE)	2 × 240	2 × 240	2 × 240	2 × 240	2 × 240	2 × 240
	AWG/MCM (NEC, CEC)	2 × 500 MCM	2 × 500 MCM	2 × 500 MCM	2 × 500 MCM	2 × 500 MCM	2 × 500 MCM
PE connection, max. connection cross-section at enclosure with M12 screw [4]	mm^2 (DIN VDE)	2 × 240	2 × 240	2 × 240	2 × 240	2 × 240	2 × 240
	AWG/MCM (NEC, CEC)	2 × 500 MCM	2 × 500 MCM	2 × 500 MCM	2 × 500 MCM	2 × 500 MCM	2 × 500 MCM
Degree of protection		IP22	IP22	IP22	IP22	IP22	IP22
Dimensions (with cabinet doors and side panels)							
• Width	mm	2420	2420	2420	2420	2420	2420
• Height	mm	2570	2570	2570	2570	2570	2570
• Depth	mm	1275	1275	1275	1275	1275	1275
Circuit design (page 2/4)		①	①	①	①	①	①
Weight	kg	1900	1900	1900	1950	1950	1950

1) The figures for the rated input current and the power figures in hp and kW are approximate values which were determined for operation with induction motors and for a typical value of the cos phi power factor and efficiency of the motor. The hp figures are based on the NEC and CEC directives for the North American market. The kW values are quoted in steps which can be divided by 50.
Both approximate values need to be adapted to the motor which is actually used.

2) Without cooling system.

3) Plus 20 A precharging current for 25 s.

4) Figures refer to a subsystem; please refer to “Circuit designs” for the number of subsystems to be connected on the line and motor side.

Technical data (continued)

SINAMICS GM150 in IGBT version Air cooling, without sine-wave filter	Type	6SL3810-2LP34-5AA0	6SL3810-2LP35-0AA0	6SL3810-2LP35-5AA0	6SL3810-2LP36-0AA0
Output voltage 4.16 kV					
Type rating	kVA	3200	3600	4000	4300
Shaft output [1]	kW	2700	3000	3300	3600
	hp	3500	4000	4500	5000
Rated output current	A	450	500	550	600
Input voltage	kV	2 × 2.2	2 × 2.2	2 × 2.2	2 × 2.2
Rated input current	A	2 × 397	2 × 446	2 × 496	2 × 533
Power loss [2]	kW	42	47	52	56
Efficiency [2]	%	98.5	98.5	98.5	98.5
Max. current requirement of auxiliary supply 50/60 Hz 230 V AC	A	10	10	10	10
Max. current requirement of auxiliary supply 50/60 Hz 400 V 3 AC [3]	A	27	27	27	27
Cooling air requirement	m^3/s	2.4	2.4	2.4	2.4
Sound pressure level L_{pA}	dB(A)	78	80	80	80
Measuring surface level L_s	dB(A)	18	18	18	18
Cable cross-sections, line-side, max. connectable per phase [4]	mm^2 (DIN VDE)	2 × 240	2 × 240	2 × 240	2 × 240
	AWG/MCM (NEC, CEC)	2 × 500 MCM	2 × 500 MCM	2 × 500 MCM	2 × 500 MCM
Cable cross-sections, motor-side, max. connectable per phase [4]	mm^2 (DIN VDE)	2 × 240	2 × 240	2 × 240	2 × 240
	AWG/MCM (NEC, CEC)	2 × 500 MCM	2 × 500 MCM	2 × 500 MCM	2 × 500 MCM
PE connection, max. connection cross-section at enclosure with M12 screw [4]	mm^2 (DIN VDE)	2 × 240	2 × 240	2 × 240	2 × 240
	AWG/MCM (NEC, CEC)	2 × 500 MCM	2 × 500 MCM	2 × 500 MCM	2 × 500 MCM
Degree of protection		IP22	IP22	IP22	IP22
Dimensions (with cabinet doors and side panels)					
• Width	mm	2420	2420	2420	2420
• Height	mm	2570	2570	2570	2570
• Depth	mm	1275	1275	1275	1275
Circuit design (page 2/4)		①	①	①	①
Weight	kg	2000	2000	2000	2000

1) The figures for the rated input current and the power figures in hp and kW are approximate values which were determined for operation with induction motors and for a typical value of the cos phi power factor and efficiency of the motor. The hp figures are based on the NEC and CEC directives for the North American market. The kW values are quoted in steps which can be divided by 50.
Both approximate values need to be adapted to the motor which is actually used.

2) Without cooling system.

3) Plus 20 A precharging current for 25 s.

4) Figures refer to a subsystem; please refer to “Circuit designs” for the number of subsystems to be connected on the line and motor side.

Technical data (continued)

SINAMICS GM150 in IGBT version Air cooling, without sine-wave filter	Type	6SL3810-2LP36-6AA0	6SL3810-2LP37-2AA0	6SL3810-2LP38-1AA0	6SL3810-2LP38-8AA0	6SL3810-2LP41-0AA0	6SL3810-2LP41-1AA0
Output voltage 4.16 kV							
Type rating	kVA	4800	5200	5800	6500	7200	7900
Shaft output [1]	kW	4000	4300	4900	5400	6000	6600
	hp	5500	6000	6500	7000	8000	9000
Rated output current	A	2 × 330	2 × 360	2 × 405	2 × 450	2 × 500	2 × 550
Input voltage	kV	2 × (2 × 2.2)	2 × (2 × 2.2)	2 × (2 × 2.2)	2 × (2 × 2.2)	2 × (2 × 2.2)	2 × (2 × 2.2)
Rated input current	A	2 × (2 × 298)	2 × (2 × 323)	2 × (2 × 360)	2 × (2 × 403)	2 × (2 × 446)	2 × (2 × 490)
Power loss [2]	kW	62	68	75	85	94	103
Efficiency [2]	%	98.6	98.5	98.6	98.5	98.5	98.5
Max. current requirement of auxiliary supply 50/60 Hz 230 V AC	A	10	10	10	10	10	10
Max. current requirement of auxiliary supply 50/60 Hz 400 V 3 AC [3]	A	54	54	54	54	54	54
Cooling air requirement	m^3/s	4.7	4.7	4.7	4.7	4.7	4.7
Sound pressure level L_{pA}	dB(A)	85	85	85	85	85	85
Measuring surface level L_s	dB(A)	19	19	19	19	19	19
Cable cross-sections, line-side, max. connectable per phase [4]	mm^2 (DIN VDE)	2 × 240	2 × 240	2 × 240	2 × 240	2 × 240	2 × 240
	AWG/MCM (NEC, CEC)	2 × 500 MCM	2 × 500 MCM	2 × 500 MCM	2 × 500 MCM	2 × 500 MCM	2 × 500 MCM
Cable cross-sections, motor-side, max. connectable per phase [4]	mm^2 (DIN VDE)	2 × 240	2 × 240	2 × 240	2 × 240	2 × 240	2 × 240
	AWG/MCM (NEC, CEC)	2 × 500 MCM	2 × 500 MCM	2 × 500 MCM	2 × 500 MCM	2 × 500 MCM	2 × 500 MCM
PE connection, max. connection cross-section at enclosure with M12 screw [4]	mm^2 (DIN VDE)	2 × 240	2 × 240	2 × 240	2 × 240	2 × 240	2 × 240
	AWG/MCM (NEC, CEC)	2 × 500 MCM	2 × 500 MCM	2 × 500 MCM	2 × 500 MCM	2 × 500 MCM	2 × 500 MCM
Degree of protection		IP22	IP22	IP22	IP22	IP22	IP22
Dimensions (with cabinet doors and side panels)							
• Width	mm	4220	4220	4220	4220	4220	4220
• Height	mm	2570	2570	2570	2570	2570	2570
• Depth	mm	1275	1275	1275	1275	1275	1275
Circuit design (page 2/4)		③	③	③	③	③	③
Weight	kg	3600	3600	3600	3700	3700	3700

1) The figures for the rated input current and the power figures in hp and kW are approximate values which were determined for operation with induction motors and for a typical value of the cos phi power factor and efficiency of the motor. The hp figures are based on the NEC and CEC directives for the North American market. The kW values are quoted in steps which can be divided by 50.
Both approximate values need to be adapted to the motor which is actually used.

2) Without cooling system.

3) Plus 20 A precharging current for 25 s.

4) Figures refer to a subsystem; please refer to “Circuit designs” for the number of subsystems to be connected on the line and motor side.

Technical data (continued)

SINAMICS GM150 in IGBT version Air cooling, without sine-wave filter	Type	6SL3810-2LQ30-8AA0	6SL3810-2LQ31-0AA0	6SL3810-2LQ31-2AA0	6SL3810-2LQ31-5AA0	6SL3810-2LQ31-8AA0
Output voltage 6.0 kV						
Type rating	kVA	800	1000	1200	1600	1900
Shaft output [1]	kW	700	850	1050	1300	1550
	hp	900	1250	1500	1750	2000
Rated output current	A	80	100	120	150	180
Input voltage	kV	2 × 2 × 1.55	2 × 2 × 1.55	2 × 2 × 1.55	2 × 2 × 1.55	2 × 2 × 1.55
Rated input current	A	2 × 2 × 67	2 × 2 × 84	2 × 2 × 101	2 × 2 × 135	2 × 2 × 162
Power loss [2]	kW	12	15	18	24	27
Efficiency [2]	%	98.3	98.3	98.3	98.3	98.4
Max. current requirement of auxiliary supply 50/60 Hz 230 V AC	A	10	10	10	10	10
Max. current requirement of auxiliary supply 50/60 Hz 400 V 3 AC [3]	A	36	36	36	36	36
Cooling air requirement	m^3/s	2.8	2.8	2.8	2.8	2.8
Sound pressure level L_{pA}	dB(A)	80	80	80	80	80
Measuring surface level L_s	dB(A)	19	19	19	19	19
Cable cross-sections, line-side, max. connectable per phase [4]	mm^2 (DIN VDE)	2 × 240	2 × 240	2 × 240	2 × 240	2 × 240
	AWG/MCM (NEC, CEC)	2 × 500 MCM	2 × 500 MCM	2 × 500 MCM	2 × 500 MCM	2 × 500 MCM
Cable cross-sections, motor-side, max. connectable per phase [4]	mm^2 (DIN VDE)	2 × 240	2 × 240	2 × 240	2 × 240	2 × 240
	AWG/MCM (NEC, CEC)	2 × 500 MCM	2 × 500 MCM	2 × 500 MCM	2 × 500 MCM	2 × 500 MCM
PE connection, max. connection cross-section at enclosure with M12 screw [4]	mm^2 (DIN VDE)	2 × 240	2 × 240	2 × 240	2 × 240	2 × 240
	AWG/MCM (NEC, CEC)	2 × 500 MCM	2 × 500 MCM	2 × 500 MCM	2 × 500 MCM	2 × 500 MCM
Degree of protection		IP22	IP22	IP22	IP22	IP22
Dimensions (with cabinet doors and side panels)						
• Width	mm	3020	3020	3020	3020	3020
• Height	mm	2570	2570	2570	2570	2570
• Depth	mm	1275	1275	1275	1275	1275
Circuit design (page 2/4)		②	②	②	②	②
Weight	kg	2300	2300	2300	2300	2350

1) The figures for the rated input current and the power figures in hp and kW are approximate values which were determined for operation with induction motors and for a typical value of the cos phi power factor and efficiency of the motor. The hp figures are based on the NEC and CEC directives for the North American market. The kW values are quoted in steps which can be divided by 50.
Both approximate values need to be adapted to the motor which is actually used.

2) Without cooling system.

3) Plus 20 A precharging current for 25 s.

4) Figures refer to a subsystem; please refer to “Circuit designs” for the number of subsystems to be connected on the line and motor side.

Technical data (continued)

SINAMICS GM150 in IGBT version Air cooling, without sine-wave filter	Type	6SL3810-2LQ32-0AA0	6SL3810-2LQ32-2AA0	6SL3810-2LQ32-4AA0	6SL3810-2LQ32-7AA0
Output voltage 6.0 kV					
Type rating	kVA	2100	2300	2500	2800
Shaft output [1]	kW	1750	1950	2100	2350
	hp	2250	2500	2750	3000
Rated output current	A	200	225	245	270
Input voltage	kV	2 × 2 × 1.55	2 × 2 × 1.55	2 × 2 × 1.55	2 × 2 × 1.55
Rated input current	A	2 × 2 × 181	2 × 2 × 198	2 × 2 × 215	2 × 2 × 241
Power loss [2]	kW	29	32	33	36
Efficiency [2]	%	98.5	98.4	98.5	98.6
Max. current requirement of auxiliary supply 50/60 Hz 230 V AC	A	10	10	10	10
Max. current requirement of auxiliary supply 50/60 Hz 400 V 3 AC [3]	A	36	36	36	36
Cooling air requirement	m^3/s	2.8	2.8	2.8	2.8
Sound pressure level L_{pA}	dB(A)	80	82	82	82
Measuring surface level L_s	dB(A)	19	19	19	19
Cable cross-sections, line-side, max. connectable per phase [4]	mm^2 (DIN VDE)	2 × 240	2 × 240	2 × 240	2 × 240
	AWG/MCM (NEC, CEC)	2 × 500 MCM	2 × 500 MCM	2 × 500 MCM	2 × 500 MCM
Cable cross-sections, motor-side, max. connectable per phase [4]	mm^2 (DIN VDE)	2 × 240	2 × 240	2 × 240	2 × 240
	AWG/MCM (NEC, CEC)	2 × 500 MCM	2 × 500 MCM	2 × 500 MCM	2 × 500 MCM
PE connection, max. connection cross-section at enclosure with M12 screw [4]	mm^2 (DIN VDE)	2 × 240	2 × 240	2 × 240	2 × 240
	AWG/MCM (NEC, CEC)	2 × 500 MCM	2 × 500 MCM	2 × 500 MCM	2 × 500 MCM
Degree of protection		IP22	IP22	IP22	IP22
Dimensions (with cabinet doors and side panels)					
• Width	mm	3020	3020	3020	3020
• Height	mm	2570	2570	2570	2570
• Depth	mm	1275	1275	1275	1275
Circuit design (page 2/4)		②	②	②	②
Weight	kg	2350	2350	2350	2350

1) The figures for the rated input current and the power figures in hp and kW are approximate values which were determined for operation with induction motors and for a typical value of the cos phi power factor and efficiency of the motor. The hp figures are based on the NEC and CEC directives for the North American market. The kW values are quoted in steps which can be divided by 50.
Both approximate values need to be adapted to the motor which is actually used.

2) Without cooling system.

3) Plus 20 A precharging current for 25 s.

4) Figures refer to a subsystem; please refer to “Circuit designs” for the number of subsystems to be connected on the line and motor side.

Technical data (continued)

SINAMICS GM150 in IGBT version Air cooling, without sine-wave filter	Type	6SL3810-2LQ33-0AA0	6SL3810-2LQ33-2AA0	6SL3810-2LQ33-6AA0	6SL3810-2LQ34-0AA0	6SL3810-2LQ34-4AA0	6SL3810-2LQ34-8AA0
Output voltage 6.0 kV							
Type rating	kVA	3100	3400	3800	4200	4600	5000
Shaft output [1]	kW	2550	2800	3200	3500	3900	4200
	hp	3500	3750	4000	4500	5000	5500
Rated output current	A	2 × 148	2 × 163	2 × 183	2 × 203	2 × 223	2 × 240
Input voltage	kV	2 × 2 × 1.55	2 × 2 × 1.55	2 × 2 × 1.55	2 × 2 × 1.55	2 × 2 × 1.55	2 × 2 × 1.55
Rated input current	A	2 × 2 × 266	2 × 2 × 292	2 × 2 × 326	2 × 2 × 361	2 × 2 × 395	2 × 2 × 438
Power loss [2]	kW	40	44	49	55	60	65
Efficiency [2]	%	98.6	98.6	98.6	98.5	98.5	98.6
Max. current requirement of auxiliary supply 50/60 Hz 230 V AC	A	10	10	10	10	10	10
Max. current requirement of auxiliary supply 50/60 Hz 400 V 3 AC [3]	A	54	54	54	54	54	54
Cooling air requirement	m^3/s	4.7	4.7	4.7	4.7	4.7	4.7
Sound pressure level L_{pA}	dB(A)	86	86	86	86	86	86
Measuring surface level L_s	dB(A)	19	19	19	19	19	19
Cable cross-sections, line-side, max. connectable per phase [4]	mm^2 (DIN VDE)	2 × 240	2 × 240	2 × 240	2 × 240	2 × 240	2 × 240
	AWG/MCM (NEC, CEC)	2 × 500 MCM	2 × 500 MCM	2 × 500 MCM	2 × 500 MCM	2 × 500 MCM	2 × 500 MCM
Cable cross-sections, motor-side, max. connectable per phase [4]	mm^2 (DIN VDE)	2 × 240	2 × 240	2 × 240	2 × 240	2 × 240	2 × 240
	AWG/MCM (NEC, CEC)	2 × 500 MCM	2 × 500 MCM	2 × 500 MCM	2 × 500 MCM	2 × 500 MCM	2 × 500 MCM
PE connection, max. connection cross-section at enclosure with M12 screw [4]	mm^2 (DIN VDE)	2 × 240	2 × 240	2 × 240	2 × 240	2 × 240	2 × 240
	AWG/MCM (NEC, CEC)	2 × 500 MCM	2 × 500 MCM	2 × 500 MCM	2 × 500 MCM	2 × 500 MCM	2 × 500 MCM
Degree of protection		IP22	IP22	IP22	IP22	IP22	IP22
Dimensions (with cabinet doors and side panels)							
• Width	mm	4220	4220	4220	4220	4220	4220
• Height	mm	2570	2570	2570	2570	2570	2570
• Depth	mm	1275	1275	1275	1275	1275	1275
Circuit design (page 2/4)		④	④	④	④	④	④
Weight	kg	3550	3550	3650	3650	3650	3650

1) The figures for the rated input current and the power figures in hp and kW are approximate values which were determined for operation with induction motors and for a typical value of the cos phi power factor and efficiency of the motor. The hp figures are based on the NEC and CEC directives for the North American market. The kW values are quoted in steps which can be divided by 50.
Both approximate values need to be adapted to the motor which is actually used.

2) Without cooling system.

3) Plus 20 A precharging current for 25 s.

4) Figures refer to a subsystem; please refer to “Circuit designs” for the number of subsystems to be connected on the line and motor side.

Technical data (continued)

SINAMICS GM150 in IGBT version Air cooling, without sine-wave filter	Type	6SL3810-2LR30-8AA0	6SL3810-2LR31-0AA0	6SL3810-2LR31-2AA0	6SL3810-2LR31-5AA0	6SL3810-2LR31-8AA0
Output voltage 6.6 kV						
Type rating	kVA	900	1100	1400	1700	2100
Shaft output [1]	kW	750	950	1150	1400	1700
	hp	1000	1250	1500	2000	2250
Rated output current	A	80	100	120	150	180
Input voltage	kV	2 × 2 × 1.7	2 × 2 × 1.7	2 × 2 × 1.7	2 × 2 × 1.7	2 × 2 × 1.7
Rated input current	A	2 × 2 × 68	2 × 2 × 84	2 × 2 × 107	2 × 2 × 130	2 × 2 × 164
Power loss [2]	kW	14	17	21	26	29
Efficiency [2]	%	98.2	98.2	98.3	98.3	98.5
Max. current requirement of auxiliary supply 50/60 Hz 230 V AC	A	10	10	10	10	10
Max. current requirement of auxiliary supply 50/60 Hz 400 V 3 AC [3]	A	36	36	36	36	36
Cooling air requirement	m^3/s	2.8	2.8	2.8	2.8	2.8
Sound pressure level L_{pA}	dB(A)	80	80	80	82	82
Measuring surface level L_s	dB(A)	19	19	19	19	19
Cable cross-sections, line-side, max. connectable per phase [4]	mm^2 (DIN VDE)	2 × 240	2 × 240	2 × 240	2 × 240	2 × 240
	AWG/MCM (NEC, CEC)	2 × 500 MCM	2 × 500 MCM	2 × 500 MCM	2 × 500 MCM	2 × 500 MCM
Cable cross-sections, motor-side, max. connectable per phase [4]	mm^2 (DIN VDE)	2 × 240	2 × 240	2 × 240	2 × 240	2 × 240
	AWG/MCM (NEC, CEC)	2 × 500 MCM	2 × 500 MCM	2 × 500 MCM	2 × 500 MCM	2 × 500 MCM
PE connection, max. connection cross-section at enclosure with M12 screw [4]	mm^2 (DIN VDE)	2 × 240	2 × 240	2 × 240	2 × 240	2 × 240
	AWG/MCM (NEC, CEC)	2 × 500 MCM	2 × 500 MCM	2 × 500 MCM	2 × 500 MCM	2 × 500 MCM
Degree of protection		IP22	IP22	IP22	IP22	IP22
Dimensions (with cabinet doors and side panels)						
• Width	mm	3020	3020	3020	3020	3020
• Height	mm	2570	2570	2570	2570	2570
• Depth	mm	1275	1275	1275	1275	1275
Circuit design (page 2/4)		②	②	②	②	②
Weight	kg	2300	2300	2300	2300	2300

1) The figures for the rated input current and the power figures in hp and kW are approximate values which were determined for operation with induction motors and for a typical value of the cos phi power factor and efficiency of the motor. The hp figures are based on the NEC and CEC directives for the North American market. The kW values are quoted in steps which can be divided by 50.
Both approximate values need to be adapted to the motor which is actually used.

2) Without cooling system.

3) Plus 20 A precharging current for 25 s.

4) Figures refer to a subsystem; please refer to “Circuit designs” for the number of subsystems to be connected on the line and motor side.

Technical data (continued)

SINAMICS GM150 in IGBT version Air cooling, without sine-wave filter	Type	6SL3810-2LR32-0AA0	6SL3810-2LR32-2AA0	6SL3810-2LR32-4AA0	6SL3810-2LR32-7AA0
Output voltage 6.6 kV					
Type rating	kVA	2300	2600	2800	3100
Shaft output [1]	kW	1900	2150	2300	2600
	hp	2500	2750	3000	3500
Rated output current	A	200	225	245	270
Input voltage	kV	2 × 2 × 1.7	2 × 2 × 1.7	2 × 2 × 1.7	2 × 2 × 1.7
Rated input current	A	2 × 2 × 180	2 × 2 × 203	2 × 2 × 219	2 × 2 × 242
Power loss [2]	kW	32	34	36	40
Efficiency [2]	%	98.4	98.5	98.6	98.6
Max. current requirement of auxiliary supply 50/60 Hz 230 V AC	A	10	10	10	10
Max. current requirement of auxiliary supply 50/60 Hz 400 V 3 AC [3]	A	36	36	36	36
Cooling air requirement	m^3/s	2.8	2.8	2.8	2.8
Sound pressure level L_{pA}	dB(A)	82	82	82	82
Measuring surface level L_s	dB(A)	19	19	19	19
Cable cross-sections, line-side, max. connectable per phase [4]	mm^2 (DIN VDE)	2 × 240	2 × 240	2 × 240	2 × 240
	AWG/MCM (NEC, CEC)	2 × 500 MCM	2 × 500 MCM	2 × 500 MCM	2 × 500 MCM
Cable cross-sections, motor-side, max. connectable per phase [4]	mm^2 (DIN VDE)	2 × 240	2 × 240	2 × 240	2 × 240
	AWG/MCM (NEC, CEC)	2 × 500 MCM	2 × 500 MCM	2 × 500 MCM	2 × 500 MCM
PE connection, max. connection cross-section at enclosure with M12 screw [4]	mm^2 (DIN VDE)	2 × 240	2 × 240	2 × 240	2 × 240
	AWG/MCM (NEC, CEC)	2 × 500 MCM	2 × 500 MCM	2 × 500 MCM	2 × 500 MCM
Degree of protection		IP22	IP22	IP22	IP22
Dimensions (with cabinet doors and side panels)					
• Width	mm	3020	3020	3020	3020
• Height	mm	2570	2570	2570	2570
• Depth	mm	1275	1275	1275	1275
Circuit design (page 2/4)		②	②	②	②
Weight	kg	2350	2350	2350	2350

1) The figures for the rated input current and the power figures in hp and kW are approximate values which were determined for operation with induction motors and for a typical value of the cos phi power factor and efficiency of the motor. The hp figures are based on the NEC and CEC directives for the North American market. The kW values are quoted in steps which can be divided by 50.
Both approximate values need to be adapted to the motor which is actually used.

2) Without cooling system.

3) Plus 20 A precharging current for 25 s.

4) Figures refer to a subsystem; please refer to “Circuit designs” for the number of subsystems to be connected on the line and motor side.

Technical data (continued)

SINAMICS GM150 in IGBT version Air cooling, without sine-wave filter	Type	6SL3810-2LR33-0AA0	6SL3810-2LR33-2AA0	6SL3810-2LR33-6AA0	6SL3810-2LR34-0AA0	6SL3810-2LR34-4AA0	6SL3810-2LR34-8AA0
Output voltage 6.6 kV							
Type rating	kVA	3400	3700	4200	4600	5100	5500
Shaft output [1]	kW	2800	3100	3500	3750	4250	4500
	hp	3750	4000	4500	5000	5500	6000
Rated output current	A	2 × 148	2 × 163	2 × 183	2 × 203	2 × 223	2 × 240
Input voltage	kV	2 × 2 × 1.7	2 × 2 × 1.7	2 × 2 × 1.7	2 × 2 × 1.7	2 × 2 × 1.7	2 × 2 × 1.7
Rated input current	A	2 × 2 × 266	2 × 2 × 289	2 × 2 × 328	2 × 2 × 359	2 × 2 × 398	2 × 2 × 437
Power loss [2]	kW	44	48	55	60	66	72
Efficiency [2]	%	98.6	98.5	98.5	98.5	98.6	98.5
Max. current requirement of auxiliary supply 50/60 Hz 230 V AC	A	10	10	10	10	10	10
Max. current requirement of auxiliary supply 50/60 Hz 400 V 3 AC [3]	A	54	54	54	54	54	54
Cooling air requirement	m^3/s	4.7	4.7	4.7	4.7	4.7	4.7
Sound pressure level L_{pA}	dB(A)	86	86	86	86	86	86
Measuring surface level L_s	dB(A)	19	19	19	19	19	19
Cable cross-sections, line-side, max. connectable per phase [4]	mm^2 (DIN VDE)	2 × 240	2 × 240	2 × 240	2 × 240	2 × 240	2 × 240
	AWG/MCM (NEC, CEC)	2 × 500 MCM	2 × 500 MCM	2 × 500 MCM	2 × 500 MCM	2 × 500 MCM	2 × 500 MCM
Cable cross-sections, motor-side, max. connectable per phase [4]	mm^2 (DIN VDE)	2 × 240	2 × 240	2 × 240	2 × 240	2 × 240	2 × 240
	AWG/MCM (NEC, CEC)	2 × 500 MCM	2 × 500 MCM	2 × 500 MCM	2 × 500 MCM	2 × 500 MCM	2 × 500 MCM
PE connection, max. connection cross-section at enclosure with M12 screw [4]	mm^2 (DIN VDE)	2 × 240	2 × 240	2 × 240	2 × 240	2 × 240	2 × 240
	AWG/MCM (NEC, CEC)	2 × 500 MCM	2 × 500 MCM	2 × 500 MCM	2 × 500 MCM	2 × 500 MCM	2 × 500 MCM
Degree of protection		IP22	IP22	IP22	IP22	IP22	IP22
Dimensions (with cabinet doors and side panels)							
• Width	mm	4220	4220	4220	4220	4220	4220
• Height	mm	2570	2570	2570	2570	2570	2570
• Depth	mm	1275	1275	1275	1275	1275	1275
Circuit design (page 2/4)		④	④	④	④	④	④
Weight	kg	3550	3550	3550	3650	3650	3650

1) The figures for the rated input current and the power figures in hp and kW are approximate values which were determined for operation with induction motors and for a typical value of the cos phi power factor and efficiency of the motor. The hp figures are based on the NEC and CEC directives for the North American market. The kW values are quoted in steps which can be divided by 50.
Both approximate values need to be adapted to the motor which is actually used.

2) Without cooling system.

3) Plus 20 A precharging current for 25 s.

4) Figures refer to a subsystem; please refer to “Circuit designs” for the number of subsystems to be connected on the line and motor side.

Technical data (continued)

SINAMICS GM150 in IGBT version Air cooling, with sine-wave filter (option Y15)	Type	6SL3810-2LM32-5AA0	6SL3810-2LM33-0AA0	6SL3810-2LM33-5AA0	6SL3810-2LM34-0AA0
Output voltage 2.3 kV					
Type rating	kVA	850	1000	1150	1300
Shaft output [1]	kW	700	800	950	1100
	hp	900	1000	1250	1500
Rated output current	A	210	250	290	330
Input voltage	kV	2 × 1.2	2 × 1.2	2 × 1.2	2 × 1.2
Rated input current	A	2 × 182	2 × 221	2 × 257	2 × 293
Power loss [2]	kW	18	22	24	26
Efficiency [2]	%	97.5	97.5	97.5	97.9
Max. current requirement of auxiliary supply 50/60 Hz 230 V AC	A	10	10	10	10
Max. current requirement of auxiliary supply 50/60 Hz 400 V 3 AC [3]	A	33	33	33	33
Cooling air requirement	m^3/s	2.2	2.2	2.2	2.2
Sound pressure level L_{pA}	dB(A)	78	81	81	81
Measuring surface level L_s	dB(A)	18	18	18	18
Cable cross-sections, line-side, max. connectable per phase [4]	mm^2 (DIN VDE)	2 × 240	2 × 240	2 × 240	2 × 240
	AWG/MCM (NEC, CEC)	2 × 500 MCM	2 × 500 MCM	2 × 500 MCM	2 × 500 MCM
Cable cross-sections, motor-side, max. connectable per phase [4]	mm^2 (DIN VDE)	2 × 240	2 × 240	2 × 240	2 × 240
	AWG/MCM (NEC, CEC)	2 × 500 MCM	2 × 500 MCM	2 × 500 MCM	2 × 500 MCM
PE connection, max. connection cross-section at enclosure with M12 screw [4]	mm^2 (DIN VDE)	2 × 240	2 × 240	2 × 240	2 × 240
	AWG/MCM (NEC, CEC)	2 × 500 MCM	2 × 500 MCM	2 × 500 MCM	2 × 500 MCM
Degree of protection		IP22	IP22	IP22	IP22
Dimensions (with cabinet doors and side panels)					
• Width	mm	3340	3340	3340	3340
• Height	mm	2570	2570	2570	2570
• Depth	mm	1275	1275	1275	1275
Circuit design (page 2/5)		⑤	⑤	⑤	⑤
Weight	kg	2800	2800	2800	2850

1) The figures for the rated input current and the power figures in hp and kW are approximate values which were determined for operation with induction motors and for a typical value of the cos phi power factor and efficiency of the motor. The hp figures are based on the NEC and CEC directives for the North American market. The kW values are quoted in steps which can be divided by 50.
Both approximate values need to be adapted to the motor which is actually used.

2) Without cooling system.

3) Plus 20 A precharging current for 25 s.

4) Figures refer to a subsystem; please refer to “Circuit designs” for the number of subsystems to be connected on the line and motor side.

Technical data (continued)

SINAMICS GM150 in IGBT version Air cooling, with sine-wave filter (option Y15)	Type	6SL3810-2LM34-5AA0	6SL3810-2LM35-0AA0	6SL3810-2LM35-5AA0	6SL3810-2LM36-0AA0
Output voltage 2.3 kV					
Type rating	kVA	1450	1650	1850	2000
Shaft output [1]	kW	1200	1400	1500	1650
	hp	1600	1750	2000	2250
Rated output current	A	370	420	460	500
Input voltage	kV	2 × 1.2	2 × 1.2	2 × 1.2	2 × 1.2
Rated input current	A	2 × 329	2 × 366	2 × 403	2 × 444
Power loss [2]	kW	28	30	33	36
Efficiency [2]	%	97.9	97.9	97.9	98.0
Max. current requirement of auxiliary supply 50/60 Hz 230 V AC	A	10	10	10	10
Max. current requirement of auxiliary supply 50/60 Hz 400 V 3 AC [3]	A	33	33	33	33
Cooling air requirement	m^3/s	2.2	2.2	2.2	2.2
Sound pressure level L_{pA}	dB(A)	79	81	81	81
Measuring surface level L_s	dB(A)	18	18	18	18
Cable cross-sections, line-side, max. connectable per phase [4]	mm^2 (DIN VDE)	2 × 240	2 × 240	2 × 240	2 × 240
	AWG/MCM (NEC, CEC)	2 × 500 MCM	2 × 500 MCM	2 × 500 MCM	2 × 500 MCM
Cable cross-sections, motor-side, max. connectable per phase [4]	mm^2 (DIN VDE)	2 × 240	2 × 240	2 × 240	2 × 240
	AWG/MCM (NEC, CEC)	2 × 500 MCM	2 × 500 MCM	2 × 500 MCM	2 × 500 MCM
PE connection, max. connection cross-section at enclosure with M12 screw [4]	mm^2 (DIN VDE)	2 × 240	2 × 240	2 × 240	2 × 240
	AWG/MCM (NEC, CEC)	2 × 500 MCM	2 × 500 MCM	2 × 500 MCM	2 × 500 MCM
Degree of protection		IP22	IP22	IP22	IP22
Dimensions (with cabinet doors and side panels)					
• Width	mm	3340	3340	3340	3340
• Height	mm	2570	2570	2570	2570
• Depth	mm	1275	1275	1275	1275
Circuit design (page 2/5)		⑤	⑤	⑤	⑤
Weight	kg	2850	2900	2950	2950

1) The figures for the rated input current and the power figures in hp and kW are approximate values which were determined for operation with induction motors and for a typical value of the cos phi power factor and efficiency of the motor. The hp figures are based on the NEC and CEC directives for the North American market. The kW values are quoted in steps which can be divided by 50.
Both approximate values need to be adapted to the motor which is actually used.

2) Without cooling system.

3) Plus 20 A precharging current for 25 s.

4) Figures refer to a subsystem; please refer to “Circuit designs” for the number of subsystems to be connected on the line and motor side.

Technical data (continued)

SINAMICS GM150 in IGBT version Air cooling, with sine-wave filter (option Y15)	Type	6SL3810-2LN31-8AA0	6SL3810-2LN32-2AA0	6SL3810-2LN32-6AA0	6SL3810-2LN33-0AA0	6SL3810-2LN33-5AA0
Output voltage 3.3 kV						
Type rating	kVA	850	1100	1250	1450	1700
Shaft output [1]	kW	700	900	1050	1200	1400
	hp	900	1000	1250	1500	1750
Rated output current	A	150	190	220	250	300
Input voltage	kV	2 × 1.2	2 × 1.7	2 × 1.7	2 × 1.7	2 × 1.7
Rated input current	A	2 × 130	2 × 171	2 × 197	2 × 223	2 × 261
Power loss [2]	kW	19	22	24	28	31
Efficiency [2]	%	97.4	97.5	97.9	97.8	97.9
Max. current requirement of auxiliary supply 50/60 Hz 230 V AC	A	10	10	10	10	10
Max. current requirement of auxiliary supply 50/60 Hz 400 V 3 AC [3]	A	33	33	33	33	33
Cooling air requirement	m^3/s	3	3	3	3	3
Sound pressure level L_{pA}	dB(A)	79	79	79	81	81
Measuring surface level L_s	dB(A)	18	18	18	18	18
Cable cross-sections, line-side, max. connectable per phase [4]	mm^2 (DIN VDE)	2 × 240	2 × 240	2 × 240	2 × 240	2 × 240
	AWG/MCM (NEC, CEC)	2 × 500 MCM	2 × 500 MCM	2 × 500 MCM	2 × 500 MCM	2 × 500 MCM
Cable cross-sections, motor-side, max. connectable per phase [4]	mm^2 (DIN VDE)	2 × 240	2 × 240	2 × 240	2 × 240	2 × 240
	AWG/MCM (NEC, CEC)	2 × 500 MCM	2 × 500 MCM	2 × 500 MCM	2 × 500 MCM	2 × 500 MCM
PE connection, max. connection cross-section at enclosure with M12 screw [4]	mm^2 (DIN VDE)	2 × 240	2 × 240	2 × 240	2 × 240	2 × 240
	AWG/MCM (NEC, CEC)	2 × 500 MCM	2 × 500 MCM	2 × 500 MCM	2 × 500 MCM	2 × 500 MCM
Degree of protection		IP22	IP22	IP22	IP22	IP22
Dimensions (with cabinet doors and side panels)						
• Width	mm	3340	3340	3340	3340	3340
• Height	mm	2570	2570	2570	2570	2570
• Depth	mm	1275	1275	1275	1275	1275
Circuit design (page 2/5)		⑤	⑤	⑤	⑤	⑤
Weight	kg	3050	3050	3100	3100	3100

1) The figures for the rated input current and the power figures in hp and kW are approximate values which were determined for operation with induction motors and for a typical value of the cos phi power factor and efficiency of the motor. The hp figures are based on the NEC and CEC directives for the North American market. The kW values are quoted in steps which can be divided by 50.
Both approximate values need to be adapted to the motor which is actually used.

2) Without cooling system.

3) Plus 20 A precharging current for 25 s.

4) Figures refer to a subsystem; please refer to “Circuit designs” for the number of subsystems to be connected on the line and motor side.

Technical data (continued)

SINAMICS GM150 in IGBT version Air cooling, with sine-wave filter (option Y15)	Type	6SL3810-2LN34-0AA0	6SL3810-2LN34-5AA0	6SL3810-2LN35-0AA0	6SL3810-2LN35-5AA0	6SL3810-2LN36-0AA0
Output voltage 3.3 kV						
Type rating	kVA	1950	2250	2450	2650	2900
Shaft output [1]	kW	1600	1850	2000	2200	2450
	hp	2000	2500	2750	3000	3250
Rated output current	A	340	390	430	460	510
Input voltage	kV	2 × 1.7	2 × 1.7	2 × 1.7	2 × 1.7	2 × 1.7
Rated input current	A	2 × 304	2 × 347	2 × 388	2 × 414	2 × 453
Power loss [2]	kW	35	40	42	45	49
Efficiency [2]	%	98.0	98.0	98.1	98.1	98.1
Max. current requirement of auxiliary supply 50/60 Hz 230 V AC	A	10	10	10	10	10
Max. current requirement of auxiliary supply 50/60 Hz 400 V 3 AC [3]	A	33	33	33	33	33
Cooling air requirement	m^3/s	3	3	3	3	3
Sound pressure level L_{pA}	dB(A)	81	79	81	81	81
Measuring surface level L_s	dB(A)	18	18	18	18	18
Cable cross-sections, line-side, max. connectable per phase [4]	mm^2 (DIN VDE)	2 × 240	2 × 240	2 × 240	2 × 240	2 × 240
	AWG/MCM (NEC, CEC)	2 × 500 MCM	2 × 500 MCM	2 × 500 MCM	2 × 500 MCM	2 × 500 MCM
Cable cross-sections, motor-side, max. connectable per phase [4]	mm^2 (DIN VDE)	2 × 240	2 × 240	2 × 240	2 × 240	2 × 240
	AWG/MCM (NEC, CEC)	2 × 500 MCM	2 × 500 MCM	2 × 500 MCM	2 × 500 MCM	2 × 500 MCM
PE connection, max. connection cross-section at enclosure with M12 screw [4]	mm^2 (DIN VDE)	2 × 240	2 × 240	2 × 240	2 × 240	2 × 240
	AWG/MCM (NEC, CEC)	2 × 500 MCM	2 × 500 MCM	2 × 500 MCM	2 × 500 MCM	2 × 500 MCM
Degree of protection		IP22	IP22	IP22	IP22	IP22
Dimensions (with cabinet doors and side panels)						
• Width	mm	3340	3340	3640	3640	3640
• Height	mm	2570	2570	2570	2570	2570
• Depth	mm	1275	1275	1275	1275	1275
Circuit design (page 2/5)		⑤	⑤	⑤	⑤	⑤
Weight	kg	3300	3300	3350	3400	3500

1) The figures for the rated input current and the power figures in hp and kW are approximate values which were determined for operation with induction motors and for a typical value of the cos phi power factor and efficiency of the motor. The hp figures are based on the NEC and CEC directives for the North American market. The kW values are quoted in steps which can be divided by 50.
Both approximate values need to be adapted to the motor which is actually used.

2) Without cooling system.

3) Plus 20 A precharging current for 25 s.

4) Figures refer to a subsystem; please refer to “Circuit designs” for the number of subsystems to be connected on the line and motor side.

Technical data (continued)

SINAMICS GM150 in IGBT version Air cooling, with sine-wave filter (option Y15)	Type	6SL3810-2LN36-6AA0	6SL3810-2LN37-2AA0	6SL3810-2LN38-1AA0	6SL3810-2LN38-8AA0	6SL3810-2LN41-0AA0	6SL3810-2LN41-1AA0
Output voltage 3.3 kV							
Type rating	kVA	3250	3500	3900	4350	4850	5350
Shaft output [1]	kW	2750	2900	3200	3600	4100	4500
	hp	3500	4000	4500	5000	5500	6000
Rated output current	A	570	610	680	760	850	940
Input voltage	kV	2 × (2 × 1.7)	2 × (2 × 1.7)	2 × (2 × 1.7)	2 × (2 × 1.7)	2 × (2 × 1.7)	2 × (2 × 1.7)
Rated input current	A	2 × (2 × 254)	2 × (2 × 274)	2 × (2 × 307)	2 × (2 × 340)	2 × (2 × 380)	2 × (2 × 420)
Power loss [2]	kW	53	59	63	69	78	86
Efficiency [2]	%	98.1	98.1	98.2	98.2	98.2	98.2
Max. current requirement of auxiliary supply 50/60 Hz 230 V AC	A	10	10	10	10	10	10
Max. current requirement of auxiliary supply 50/60 Hz 400 V 3 AC [3]	A	66	66	66	66	66	66
Cooling air requirement	m^3/s	5.8	5.8	5.8	5.8	5.8	5.8
Sound pressure level L_{pA}	dB(A)	87	87	87	87	87	87
Measuring surface level L_s	dB(A)	19	19	19	19	19	19
Cable cross-sections, line-side, max. connectable per phase [4]	mm^2 (DIN VDE)	2 × 240	2 × 240	2 × 240	2 × 240	2 × 240	2 × 240
	AWG/MCM (NEC, CEC)	2 × 500 MCM	2 × 500 MCM	2 × 500 MCM	2 × 500 MCM	2 × 500 MCM	2 × 500 MCM
Cable cross-sections, motor-side, max. connectable per phase [4]	mm^2 (DIN VDE)	2 × 240	2 × 240	2 × 240	2 × 240	2 × 240	2 × 240
	AWG/MCM (NEC, CEC)	2 × 500 MCM	2 × 500 MCM	2 × 500 MCM	2 × 500 MCM	2 × 500 MCM	2 × 500 MCM
PE connection, max. connection cross-section at enclosure with M12 screw [4]	mm^2 (DIN VDE)	2 × 240	2 × 240	2 × 240	2 × 240	2 × 240	2 × 240
	AWG/MCM (NEC, CEC)	2 × 500 MCM	2 × 500 MCM	2 × 500 MCM	2 × 500 MCM	2 × 500 MCM	2 × 500 MCM
Degree of protection		IP22	IP22	IP22	IP22	IP22	IP22
Dimensions (with cabinet doors and side panels)							
• Width	mm	6060	6060	6060	6060	6660	6660
• Height	mm	2570	2570	2570	2570	2570	2570
• Depth	mm	1275	1275	1275	1275	1275	1275
Circuit design (page 2/5)		⑦	⑦	⑦	⑦	⑦	⑦
Weight	kg	5900	6300	6300	6300	6500	6500

1) The figures for the rated input current and the power figures in hp and kW are approximate values which were determined for operation with induction motors and for a typical value of the cos phi power factor and efficiency of the motor. The hp figures are based on the NEC and CEC directives for the North American market. The kW values are quoted in steps which can be divided by 50.
Both approximate values need to be adapted to the motor which is actually used.

2) Without cooling system.

3) Plus 20 A precharging current for 25 s.

4) Figures refer to a subsystem; please refer to “Circuit designs” for the number of subsystems to be connected on the line and motor side.

Technical data (continued)

SINAMICS GM150 in IGBT version Air cooling, with sine-wave filter (option Y15)	Type	6SL3810-2LP31-8AA0	6SL3810-2LP32-2AA0	6SL3810-2LP32-6AA0	6SL3810-2LP33-0AA0	6SL3810-2LP33-5AA0
Output voltage 4.16 kV						
Type rating	kVA	1100	1350	1600	1850	2100
Shaft output [1]	kW	900	1150	1300	1550	1750
	hp	1250	1500	1750	2000	2250
Rated output current	A	150	190	220	260	290
Input voltage	kV	2 × 2.2	2 × 2.2	2 × 2.2	2 × 2.2	2 × 2.2
Rated input current	A	2 × 133	2 × 163	2 × 195	2 × 225	2 × 262
Power loss [2]	kW	24	25	29	33	38
Efficiency [2]	%	97.5	97.9	97.9	98.0	98.0
Max. current requirement of auxiliary supply 50/60 Hz 230 V AC	A	10	10	10	10	10
Max. current requirement of auxiliary supply 50/60 Hz 400 V 3 AC [3]	A	33	33	33	33	33
Cooling air requirement	m^3/s	3	3	3	3	3
Sound pressure level L_{pA}	dB(A)	79	79	79	81	81
Measuring surface level L_s	dB(A)	18	18	18	18	18
Cable cross-sections, line-side, max. connectable per phase [4]	mm^2 (DIN VDE)	2 × 240	2 × 240	2 × 240	2 × 240	2 × 240
	AWG/MCM (NEC, CEC)	2 × 500 MCM	2 × 500 MCM	2 × 500 MCM	2 × 500 MCM	2 × 500 MCM
Cable cross-sections, motor-side, max. connectable per phase [4]	mm^2 (DIN VDE)	2 × 240	2 × 240	2 × 240	2 × 240	2 × 240
	AWG/MCM (NEC, CEC)	2 × 500 MCM	2 × 500 MCM	2 × 500 MCM	2 × 500 MCM	2 × 500 MCM
PE connection, max. connection cross-section at enclosure with M12 screw [4]	mm^2 (DIN VDE)	2 × 240	2 × 240	2 × 240	2 × 240	2 × 240
	AWG/MCM (NEC, CEC)	2 × 500 MCM	2 × 500 MCM	2 × 500 MCM	2 × 500 MCM	2 × 500 MCM
Degree of protection		IP22	IP22	IP22	IP22	IP22
Dimensions (with cabinet doors and side panels)						
• Width	mm	3640	3640	3640	3640	3640
• Height	mm	2570	2570	2570	2570	2570
• Depth	mm	1275	1275	1275	1275	1275
Circuit design (page 2/5)		⑤	⑤	⑤	⑤	⑤
Weight	kg	3300	3300	3300	3350	3350

1) The figures for the rated input current and the power figures in hp and kW are approximate values which were determined for operation with induction motors and for a typical value of the cos phi power factor and efficiency of the motor. The hp figures are based on the NEC and CEC directives for the North American market. The kW values are quoted in steps which can be divided by 50.
Both approximate values need to be adapted to the motor which is actually used.

2) Without cooling system.

3) Plus 20 A precharging current for 25 s.

4) Figures refer to a subsystem; please refer to “Circuit designs” for the number of subsystems to be connected on the line and motor side.

Technical data (continued)

SINAMICS GM150 in IGBT version Air cooling, with sine-wave filter (option Y15)	Type	6SL3810-2LP34-0AA0	6SL3810-2LP34-5AA0	6SL3810-2LP35-0AA0	6SL3810-2LP35-5AA0	6SL3810-2LP36-0AA0
Output voltage 4.16 kV						
Type rating	kVA	2450	2650	3050	3400	3600
Shaft output [1]	kW	2000	2200	2500	2750	3000
	hp	2750	3000	3500	3750	4000
Rated output current	A	340	370	420	470	500
Input voltage	kV	2 × 2.2	2 × 2.2	2 × 2.2	2 × 2.2	2 × 2.2
Rated input current	A	2 × 304	2 × 335	2 × 376	2 × 418	2 × 449
Power loss [2]	kW	41	46	51	57	61
Efficiency [2]	%	98.1	98.1	98.1	98.1	98.1
Max. current requirement of auxiliary supply 50/60 Hz 230 V AC	A	10	10	10	10	10
Max. current requirement of auxiliary supply 50/60 Hz 400 V 3 AC [3]	A	33	33	33	33	33
Cooling air requirement	m^3/s	3	3	3	3	3
Sound pressure level L_{pA}	dB(A)	81	79	81	81	81
Measuring surface level L_s	dB(A)	18	18	18	18	18
Cable cross-sections, line-side, max. connectable per phase [4]	mm^2 (DIN VDE)	2 × 240	2 × 240	2 × 240	2 × 240	2 × 240
	AWG/MCM (NEC, CEC)	2 × 500 MCM	2 × 500 MCM	2 × 500 MCM	2 × 500 MCM	2 × 500 MCM
Cable cross-sections, motor-side, max. connectable per phase [4]	mm^2 (DIN VDE)	2 × 240	2 × 240	2 × 240	2 × 240	2 × 240
	AWG/MCM (NEC, CEC)	2 × 500 MCM	2 × 500 MCM	2 × 500 MCM	2 × 500 MCM	2 × 500 MCM
PE connection, max. connection cross-section at enclosure with M12 screw [4]	mm^2 (DIN VDE)	2 × 240	2 × 240	2 × 240	2 × 240	2 × 240
	AWG/MCM (NEC, CEC)	2 × 500 MCM	2 × 500 MCM	2 × 500 MCM	2 × 500 MCM	2 × 500 MCM
Degree of protection		IP22	IP22	IP22	IP22	IP22
Dimensions (with cabinet doors and side panels)						
• Width	mm	3640	3640	3640	3640	3640
• Height	mm	2570	2570	2570	2570	2570
• Depth	mm	1275	1275	1275	1275	1275
Circuit design (page 2/5)		⑤	⑤	⑤	⑤	⑤
Weight	kg	3350	3400	3450	3450	3450

1) The figures for the rated input current and the power figures in hp and kW are approximate values which were determined for operation with induction motors and for a typical value of the cos phi power factor and efficiency of the motor. The hp figures are based on the NEC and CEC directives for the North American market. The kW values are quoted in steps which can be divided by 50.
Both approximate values need to be adapted to the motor which is actually used.

2) Without cooling system.

3) Plus 20 A precharging current for 25 s.

4) Figures refer to a subsystem; please refer to “Circuit designs” for the number of subsystems to be connected on the line and motor side.

Technical data (continued)

SINAMICS GM150 in IGBT version Air cooling, with sine-wave filter (option Y15)	Type	6SL3810-2LP36-6AA0	6SL3810-2LP37-2AA0	6SL3810-2LP38-1AA0	6SL3810-2LP38-8AA0	6SL3810-2LP41-0AA0	6SL3810-2LP41-1AA0
Output voltage 4.16 kV							
Type rating	kVA	4050	4400	4900	5500	6050	6650
Shaft output [1]	kW	3300	3600	4000	4500	5000	5500
	hp	4500	5000	5500	6000	6750	7500
Rated output current	A	560	610	680	760	840	920
Input voltage	kV	2 × (2 × 2.2)	2 × (2 × 2.2)	2 × (2 × 2.2)	2 × (2 × 2.2)	2 × (2 × 2.2)	2 × (2 × 2.2)
Rated input current	A	2 × (2 × 251)	2 × (2 × 272)	2 × (2 × 303)	2 × (2 × 340)	2 × (2 × 376)	2 × (2 × 413)
Power loss [2]	kW	64	70	78	87	97	106
Efficiency [2]	%	98.2	98.2	98.2	98.2	98.2	98.2
Max. current requirement of auxiliary supply 50/60 Hz 230 V AC	A	10	10	10	10	10	10
Max. current requirement of auxiliary supply 50/60 Hz 400 V 3 AC [3]	A	66	66	66	66	66	66
Cooling air requirement	m^3/s	5.8	5.8	5.8	5.8	5.8	5.8
Sound pressure level L_{pA}	dB(A)	87	87	87	87	87	87
Measuring surface level L_s	dB(A)	19	19	19	19	19	19
Cable cross-sections, line-side, max. connectable per phase [4]	mm^2 (DIN VDE)	2 × 240	2 × 240	2 × 240	2 × 240	2 × 240	2 × 240
	AWG/MCM (NEC, CEC)	2 × 500 MCM	2 × 500 MCM	2 × 500 MCM	2 × 500 MCM	2 × 500 MCM	2 × 500 MCM
Cable cross-sections, motor-side, max. connectable per phase [4]	mm^2 (DIN VDE)	2 × 240	2 × 240	2 × 240	2 × 240	2 × 240	2 × 240
	AWG/MCM (NEC, CEC)	2 × 500 MCM	2 × 500 MCM	2 × 500 MCM	2 × 500 MCM	2 × 500 MCM	2 × 500 MCM
PE connection, max. connection cross-section at enclosure with M12 screw [4]	mm^2 (DIN VDE)	2 × 240	2 × 240	2 × 240	2 × 240	2 × 240	2 × 240
	AWG/MCM (NEC, CEC)	2 × 500 MCM	2 × 500 MCM	2 × 500 MCM	2 × 500 MCM	2 × 500 MCM	2 × 500 MCM
Degree of protection		IP22	IP22	IP22	IP22	IP22	IP22
Dimensions (with cabinet doors and side panels)							
• Width	mm	6660	6660	6660	6660	6660	6660
• Height	mm	2570	2570	2570	2570	2570	2570
• Depth	mm	1275	1275	1275	1275	1275	1275
Circuit design (page 2/5)		⑦	⑦	⑦	⑦	⑦	⑦
Weight	kg	6400	6400	6400	6500	6600	6600

1) The figures for the rated input current and the power figures in hp and kW are approximate values which were determined for operation with induction motors and for a typical value of the cos phi power factor and efficiency of the motor. The hp figures are based on the NEC and CEC directives for the North American market. The kW values are quoted in steps which can be divided by 50.
Both approximate values need to be adapted to the motor which is actually used.

2) Without cooling system.

3) Plus 20 A precharging current for 25 s.

4) Figures refer to a subsystem; please refer to “Circuit designs” for the number of subsystems to be connected on the line and motor side.

Technical data (continued)

SINAMICS GM150 in IGBT version Air cooling, with sine-wave filter (option Y15)	Type	6SL3810-2LQ30-8AA0	6SL3810-2LQ31-0AA0	6SL3810-2LQ31-2AA0	6SL3810-2LQ31-5AA0	6SL3810-2LQ31-8AA0
Output voltage 6.0 kV						
Type rating	kVA	650	850	1000	1250	1500
Shaft output [1]	kW	550	700	800	1050	1250
	hp	700	900	1000	1250	1500
Rated output current	A	64	80	96	120	144
Input voltage	kV	2 × 2 × 1.55	2 × 2 × 1.55	2 × 2 × 1.55	2 × 2 × 1.55	2 × 2 × 1.55
Rated input current	A	2 × 2 × 54	2 × 2 × 68	2 × 2 × 82	2 × 2 × 108	2 × 2 × 129
Power loss [2]	kW	15	18	21	24	29
Efficiency [2]	%	97.3	97.5	97.5	97.9	97.8
Max. current requirement of auxiliary supply 50/60 Hz 230 V AC	A	10	10	10	10	10
Max. current requirement of auxiliary supply 50/60 Hz 400 V 3 AC [3]	A	42	42	42	42	42
Cooling air requirement	m^3/s	3.4	3.4	3.4	3.4	3.4
Sound pressure level L_{pA}	dB(A)	81	81	81	81	81
Measuring surface level L_s	dB(A)	19	19	19	19	19
Cable cross-sections, line-side, max. connectable per phase [4]	mm^2 (DIN VDE)	2 × 240	2 × 240	2 × 240	2 × 240	2 × 240
	AWG/MCM (NEC, CEC)	2 × 500 MCM	2 × 500 MCM	2 × 500 MCM	2 × 500 MCM	2 × 500 MCM
Cable cross-sections, motor-side, max. connectable per phase [4]	mm^2 (DIN VDE)	2 × 240	2 × 240	2 × 240	2 × 240	2 × 240
	AWG/MCM (NEC, CEC)	2 × 500 MCM	2 × 500 MCM	2 × 500 MCM	2 × 500 MCM	2 × 500 MCM
PE connection, max. connection cross-section at enclosure with M12 screw [4]	mm^2 (DIN VDE)	2 × 240	2 × 240	2 × 240	2 × 240	2 × 240
	AWG/MCM (NEC, CEC)	2 × 500 MCM	2 × 500 MCM	2 × 500 MCM	2 × 500 MCM	2 × 500 MCM
Degree of protection		IP22	IP22	IP22	IP22	IP22
Dimensions (with cabinet doors and side panels)						
• Width	mm	4240	4240	4240	4240	4240
• Height	mm	2570	2570	2570	2570	2570
• Depth	mm	1275	1275	1275	1275	1275
Circuit design (page 2/5)		⑥	⑥	⑥	⑥	⑥
Weight	kg	4350	4350	4350	4350	4400

1) The figures for the rated input current and the power figures in hp and kW are approximate values which were determined for operation with induction motors and for a typical value of the cos phi power factor and efficiency of the motor. The hp figures are based on the NEC and CEC directives for the North American market. The kW values are quoted in steps which can be divided by 50.
Both approximate values need to be adapted to the motor which is actually used.

2) Without cooling system.

3) Plus 20 A precharging current for 25 s.

4) Figures refer to a subsystem; please refer to “Circuit designs” for the number of subsystems to be connected on the line and motor side.

Technical data (continued)

SINAMICS GM150 in IGBT version Air cooling, with sine-wave filter (option Y15)	Type	6SL3810-2LQ32-0AA0	6SL3810-2LQ32-2AA0	6SL3810-2LQ32-4AA0	6SL3810-2LQ32-7AA0
Output voltage 6.0 kV					
Type rating	kVA	1650	1850	2050	2250
Shaft output [1]	kW	1400	1550	1700	1850
	hp	1750	2000	2250	2500
Rated output current	A	160	180	196	216
Input voltage	kV	2 × 2 × 1.55	2 × 2 × 1.55	2 × 2 × 1.55	2 × 2 × 1.55
Rated input current	A	2 × 2 × 144	2 × 2 × 157	2 × 2 × 173	2 × 2 × 194
Power loss [2]	kW	30	33	36	40
Efficiency [2]	%	98.0	98.0	98.0	98.0
Max. current requirement of auxiliary supply 50/60 Hz 230 V AC	A	10	10	10	10
Max. current requirement of auxiliary supply 50/60 Hz 400 V 3 AC [3]	A	42	42	42	42
Cooling air requirement	m^3/s	3.4	3.4	3.4	3.4
Sound pressure level L_{pA}	dB(A)	81	83	83	83
Measuring surface level L_s	dB(A)	19	19	19	19
Cable cross-sections, line-side, max. connectable per phase [4]	mm^2 (DIN VDE)	2 × 240	2 × 240	2 × 240	2 × 240
	AWG/MCM (NEC, CEC)	2 × 500 MCM	2 × 500 MCM	2 × 500 MCM	2 × 500 MCM
Cable cross-sections, motor-side, max. connectable per phase [4]	mm^2 (DIN VDE)	2 × 240	2 × 240	2 × 240	2 × 240
	AWG/MCM (NEC, CEC)	2 × 500 MCM	2 × 500 MCM	2 × 500 MCM	2 × 500 MCM
PE connection, max. connection cross-section at enclosure with M12 screw [4]	mm^2 (DIN VDE)	2 × 240	2 × 240	2 × 240	2 × 240
	AWG/MCM (NEC, CEC)	2 × 500 MCM	2 × 500 MCM	2 × 500 MCM	2 × 500 MCM
Degree of protection		IP22	IP22	IP22	IP22
Dimensions (with cabinet doors and side panels)					
• Width	mm	4240	4240	4240	4240
• Height	mm	2570	2570	2570	2570
• Depth	mm	1275	1275	1275	1275
Circuit design (page 2/5)		⑥	⑥	⑥	⑥
Weight	kg	4400	4400	4400	4600

1) The figures for the rated input current and the power figures in hp and kW are approximate values which were determined for operation with induction motors and for a typical value of the cos phi power factor and efficiency of the motor. The hp figures are based on the NEC and CEC directives for the North American market. The kW values are quoted in steps which can be divided by 50.
Both approximate values need to be adapted to the motor which is actually used.

2) Without cooling system.

3) Plus 20 A precharging current for 25 s.

4) Figures refer to a subsystem; please refer to “Circuit designs” for the number of subsystems to be connected on the line and motor side.

Technical data (continued)

SINAMICS GM150 in IGBT version Air cooling, with sine-wave filter (option Y15)	Type	6SL3810-2LQ33-0AA0	6SL3810-2LQ33-2AA0	6SL3810-2LQ33-6AA0	6SL3810-2LQ34-0AA0	6SL3810-2LQ34-4AA0	6SL3810-2LQ34-8AA0
Output voltage 6.0 kV							
Type rating	kVA	2450	2700	3050	3350	3700	4000
Shaft output [1]	kW	2000	2250	2500	2800	3000	3300
	hp	2750	3000	3250	3750	4000	4500
Rated output current	A	236	260	292	324	356	384
Input voltage	kV	2 × 2 × 1.55	2 × 2 × 1.55	2 × 2 × 1.55	2 × 2 × 1.55	2 × 2 × 1.55	2 × 2 × 1.55
Rated input current	A	2 × 2 × 214	2 × 2 × 235	2 × 2 × 262	2 × 2 × 290	2 × 2 × 318	2 × 2 × 352
Power loss [2]	kW	42	46	52	57	63	64
Efficiency [2]	%	98.1	98.1	98.1	98.1	98.1	98.2
Max. current requirement of auxiliary supply 50/60 Hz 230 V AC	A	10	10	10	10	10	10
Max. current requirement of auxiliary supply 50/60 Hz 400 V 3 AC [3]	A	66	66	66	66	66	66
Cooling air requirement	m^3/s	5.8	5.8	5.8	5.8	5.8	5.8
Sound pressure level L_{pA}	dB(A)	88	88	88	88	88	88
Measuring surface level L_s	dB(A)	19	19	19	19	19	19
Cable cross-sections, line-side, max. connectable per phase [4]	mm^2 (DIN VDE)	2 × 240	2 × 240	2 × 240	2 × 240	2 × 240	2 × 240
	AWG/MCM (NEC, CEC)	2 × 500 MCM	2 × 500 MCM	2 × 500 MCM	2 × 500 MCM	2 × 500 MCM	2 × 500 MCM
Cable cross-sections, motor-side, max. connectable per phase [4]	mm^2 (DIN VDE)	2 × 240	2 × 240	2 × 240	2 × 240	2 × 240	2 × 240
	AWG/MCM (NEC, CEC)	2 × 500 MCM	2 × 500 MCM	2 × 500 MCM	2 × 500 MCM	2 × 500 MCM	2 × 500 MCM
PE connection, max. connection cross-section at enclosure with M12 screw [4]	mm^2 (DIN VDE)	2 × 240	2 × 240	2 × 240	2 × 240	2 × 240	2 × 240
	AWG/MCM (NEC, CEC)	2 × 500 MCM	2 × 500 MCM	2 × 500 MCM	2 × 500 MCM	2 × 500 MCM	2 × 500 MCM
Degree of protection		IP22	IP22	IP22	IP22	IP22	IP22
Dimensions (with cabinet doors and side panels)							
• Width	mm	6660	6660	6660	6660	6660	6660
• Height	mm	2570	2570	2570	2570	2570	2570
• Depth	mm	1275	1275	1275	1275	1275	1275
Circuit design (page 2/5)		⑧	⑧	⑧	⑧	⑧	⑧
Weight	kg	7650	7650	7750	7750	7750	7750

1) The figures for the rated input current and the power figures in hp and kW are approximate values which were determined for operation with induction motors and for a typical value of the cos phi power factor and efficiency of the motor. The hp figures are based on the NEC and CEC directives for the North American market. The kW values are quoted in steps which can be divided by 50.
Both approximate values need to be adapted to the motor which is actually used.

2) Without cooling system.

3) Plus 20 A precharging current for 25 s.

4) Figures refer to a subsystem; please refer to “Circuit designs” for the number of subsystems to be connected on the line and motor side.

Technical data (continued)

SINAMICS GM150 in IGBT version Air cooling, with sine-wave filter (option Y15)	Type	6SL3810-2LR30-8AA0	6SL3810-2LR31-0AA0	6SL3810-2LR31-2AA0	6SL3810-2LR31-5AA0	6SL3810-2LR31-8AA0
Output voltage 6.6 kV						
Type rating	kVA	700	850	1050	1300	1550
Shaft output [1]	kW	550	700	850	1050	1300
	hp	700	900	1000	1250	1500
Rated output current	A	60	75	90	113	135
Input voltage	kV	2 × 2 × 1.7	2 × 2 × 1.7	2 × 2 × 1.7	2 × 2 × 1.7	2 × 2 × 1.7
Rated input current	A	2 × 2 × 55	2 × 2 × 68	2 × 2 × 86	2 × 2 × 105	2 × 2 × 131
Power loss [2]	kW	16	18	23	26	30
Efficiency [2]	%	97.3	97.6	97.5	97.8	98.0
Max. current requirement of auxiliary supply 50/60 Hz 230 V AC	A	10	10	10	10	10
Max. current requirement of auxiliary supply 50/60 Hz 400 V 3 AC [3]	A	42	42	42	42	42
Cooling air requirement	m^3/s	3.4	3.4	3.4	3.4	3.4
Sound pressure level L_{pA}	dB(A)	81	81	81	83	83
Measuring surface level L_s	dB(A)	19	19	19	19	19
Cable cross-sections, line-side, max. connectable per phase [4]	mm^2 (DIN VDE)	2 × 240	2 × 240	2 × 240	2 × 240	2 × 240
	AWG/MCM (NEC, CEC)	2 × 500 MCM	2 × 500 MCM	2 × 500 MCM	2 × 500 MCM	2 × 500 MCM
Cable cross-sections, motor-side, max. connectable per phase [4]	mm^2 (DIN VDE)	2 × 240	2 × 240	2 × 240	2 × 240	2 × 240
	AWG/MCM (NEC, CEC)	2 × 500 MCM	2 × 500 MCM	2 × 500 MCM	2 × 500 MCM	2 × 500 MCM
PE connection, max. connection cross-section at enclosure with M12 screw [4]	mm^2 (DIN VDE)	2 × 240	2 × 240	2 × 240	2 × 240	2 × 240
	AWG/MCM (NEC, CEC)	2 × 500 MCM	2 × 500 MCM	2 × 500 MCM	2 × 500 MCM	2 × 500 MCM
Degree of protection		IP22	IP22	IP22	IP22	IP22
Dimensions (with cabinet doors and side panels)						
• Width	mm	4240	4240	4240	4240	4240
• Height	mm	2570	2570	2570	2570	2570
• Depth	mm	1275	1275	1275	1275	1275
Circuit design (page 2/5)		⑥	⑥	⑥	⑥	⑥
Weight	kg	4350	4350	4350	4350	4350

1) The figures for the rated input current and the power figures in hp and kW are approximate values which were determined for operation with induction motors and for a typical value of the cos phi power factor and efficiency of the motor. The hp figures are based on the NEC and CEC directives for the North American market. The kW values are quoted in steps which can be divided by 50.
Both approximate values need to be adapted to the motor which is actually used.

2) Without cooling system.

3) Plus 20 A precharging current for 25 s.

4) Figures refer to a subsystem; please refer to “Circuit designs” for the number of subsystems to be connected on the line and motor side.

Technical data (continued)

SINAMICS GM150 in IGBT version Air cooling, with sine-wave filter (option Y15)	Type	6SL3810-2LR32-0AA0	6SL3810-2LR32-2AA0	6SL3810-2LR32-4AA0	6SL3810-2LR32-7AA0
Output voltage 6.6 kV					
Type rating	kVA	1700	1950	2100	2300
Shaft output [1]	kW	1400	1600	1750	1900
	hp	1750	2000	2250	2500
Rated output current	A	150	169	184	203
Input voltage	kV	2 × 2 × 1.7	2 × 2 × 1.7	2 × 2 × 1.7	2 × 2 × 1.7
Rated input current	A	2 × 2 × 143	2 × 2 × 163	2 × 2 × 176	2 × 2 × 195
Power loss [2]	kW	31	35	38	40
Efficiency [2]	%	98.0	98.0	98.0	98.1
Max. current requirement of auxiliary supply 50/60 Hz 230 V AC	A	10	10	10	10
Max. current requirement of auxiliary supply 50/60 Hz 400 V 3 AC [3]	A	42	42	42	42
Cooling air requirement	m^3/s	3.4	3.4	3.4	3.4
Sound pressure level L_{pA}	dB(A)	83	83	83	83
Measuring surface level L_s	dB(A)	19	19	19	19
Cable cross-sections, line-side, max. connectable per phase [4]	mm^2 (DIN VDE)	2 × 240	2 × 240	2 × 240	2 × 240
	AWG/MCM (NEC, CEC)	2 × 500 MCM	2 × 500 MCM	2 × 500 MCM	2 × 500 MCM
Cable cross-sections, motor-side, max. connectable per phase [4]	mm^2 (DIN VDE)	2 × 240	2 × 240	2 × 240	2 × 240
	AWG/MCM (NEC, CEC)	2 × 500 MCM	2 × 500 MCM	2 × 500 MCM	2 × 500 MCM
PE connection, max. connection cross-section at enclosure with M12 screw [4]	mm^2 (DIN VDE)	2 × 240	2 × 240	2 × 240	2 × 240
	AWG/MCM (NEC, CEC)	2 × 500 MCM	2 × 500 MCM	2 × 500 MCM	2 × 500 MCM
Degree of protection		IP22	IP22	IP22	IP22
Dimensions (with cabinet doors and side panels)					
• Width	mm	4240	4240	4240	4240
• Height	mm	2570	2570	2570	2570
• Depth	mm	1275	1275	1275	1275
Circuit design (page 2/5)		⑥	⑥	⑥	⑥
Weight	kg	4400	4400	4400	4600

1) The figures for the rated input current and the power figures in hp and kW are approximate values which were determined for operation with induction motors and for a typical value of the cos phi power factor and efficiency of the motor. The hp figures are based on the NEC and CEC directives for the North American market. The kW values are quoted in steps which can be divided by 50.
Both approximate values need to be adapted to the motor which is actually used.

2) Without cooling system.

3) Plus 20 A precharging current for 25 s.

4) Figures refer to a subsystem; please refer to “Circuit designs” for the number of subsystems to be connected on the line and motor side.

Technical data (continued)

SINAMICS GM150 in IGBT version Air cooling, with sine-wave filter (option Y15)	Type	6SL3810-2LR33-0AA0	6SL3810-2LR33-2AA0	6SL3810-2LR33-6AA0	6SL3810-2LR34-0AA0	6SL3810-2LR34-4AA0	6SL3810-2LR34-8AA0
Output voltage 6.6 kV							
Type rating	kVA	2550	2800	3150	3500	3800	4200
Shaft output [1]	kW	2100	2400	2600	2800	3200	3500
	hp	2750	3000	3500	4000	4250	4500
Rated output current	A	221	244	274	304	334	368
Input voltage	kV	2 × 2 × 1.7	2 × 2 × 1.7	2 × 2 × 1.7	2 × 2 × 1.7	2 × 2 × 1.7	2 × 2 × 1.7
Rated input current	A	2 × 2 × 213	2 × 2 × 232	2 × 2 × 264	2 × 2 × 289	2 × 2 × 320	2 × 2 × 351
Power loss [2]	kW	43	47	54	59	61	67
Efficiency [2]	%	98.1	98.1	98.1	98.1	98.2	98.2
Max. current requirement of auxiliary supply 50/60 Hz 230 V AC	A	10	10	10	10	10	10
Max. current requirement of auxiliary supply 50/60 Hz 400 V 3 AC [3]	A	66	66	66	66	66	66
Cooling air requirement	m^3/s	5.8	5.8	5.8	5.8	5.8	5.8
Sound pressure level L_{pA}	dB(A)	88	88	88	88	88	88
Measuring surface level L_s	dB(A)	19	19	19	19	19	19
Cable cross-sections, line-side, max. connectable per phase [4]	mm^2 (DIN VDE)	2 × 240	2 × 240	2 × 240	2 × 240	2 × 240	2 × 240
	AWG/MCM (NEC, CEC)	2 × 500 MCM	2 × 500 MCM	2 × 500 MCM	2 × 500 MCM	2 × 500 MCM	2 × 500 MCM
Cable cross-sections, motor-side, max. connectable per phase [4]	mm^2 (DIN VDE)	2 × 240	2 × 240	2 × 240	2 × 240	2 × 240	2 × 240
	AWG/MCM (NEC, CEC)	2 × 500 MCM	2 × 500 MCM	2 × 500 MCM	2 × 500 MCM	2 × 500 MCM	2 × 500 MCM
PE connection, max. connection cross-section at enclosure with M12 screw [4]	mm^2 (DIN VDE)	2 × 240	2 × 240	2 × 240	2 × 240	2 × 240	2 × 240
	AWG/MCM (NEC, CEC)	2 × 500 MCM	2 × 500 MCM	2 × 500 MCM	2 × 500 MCM	2 × 500 MCM	2 × 500 MCM
Degree of protection		IP22	IP22	IP22	IP22	IP22	IP22
Dimensions (with cabinet doors and side panels)							
• Width	mm	6660	6660	6660	6660	6660	6660
• Height	mm	2570	2570	2570	2570	2570	2570
• Depth	mm	1275	1275	1275	1275	1275	1275
Circuit design (page 2/5)		⑧	⑧	⑧	⑧	⑧	⑧
Weight	kg	7650	7650	7650	7750	7750	7750

1) The figures for the rated input current and the power figures in hp and kW are approximate values which were determined for operation with induction motors and for a typical value of the cos phi power factor and efficiency of the motor. The hp figures are based on the NEC and CEC directives for the North American market. The kW values are quoted in steps which can be divided by 50.
Both approximate values need to be adapted to the motor which is actually used.

2) Without cooling system.

3) Plus 20 A precharging current for 25 s.

4) Figures refer to a subsystem; please refer to “Circuit designs” for the number of subsystems to be connected on the line and motor side.

Technical data (continued)

SINAMICS GM150 in IGBT version Water cooling, without sine-wave filter	Type	6SL3815-2LM35-0AA0	6SL3815-2LM35-5AA0	6SL3815-2LM36-1AA0	6SL3815-2LM36-7AA0	6SL3815-2LM37-4AA0	6SL3815-2LM38-0AA0
Output voltage 2.3 kV							
Type rating	kVA	2000	2200	2400	2700	2900	3200
Shaft output [1]	kW	1650	1800	2000	2250	2450	2650
	hp	2250	2500	2750	3000	3250	3500
Rated output current	A	500	550	610	675	740	800
Input voltage	kV	2 × 1.2	2 × 1.2	2 × 1.2	2 × 1.2	2 × 1.2	2 × 1.2
Rated input current	A	2 × 444	2 × 494	2 × 539	2 × 605	2 × 650	2 × 717
Power loss [2] [3]	kW	28	31	34	35	38	42
Efficiency [3]	%	98.4	98.4	98.4	98.5	98.5	98.5
Max. current requirement of auxiliary supply 50/60 Hz 230 V AC	A	10	10	10	10	10	10
Max. current requirement of auxiliary supply 50/60 Hz 400 V 3 AC [4]	A	25	25	25	25	25	25
Cooling water requirement (raw-water/deionized water)	l/min	72	72	72	72	72	72
Sound pressure level L_{pA}	dB(A)	73	73	73	73	73	73
Measuring surface level L_s	dB(A)	18	18	18	18	18	18
Cable cross-sections, line-side, max. connectable per phase [5]	mm^2 (DIN VDE)	2 × 240	2 × 240	2 × 240	2 × 240	2 × 240	2 × 240
	AWG/MCM (NEC, CEC)	2 × 500 MCM	2 × 500 MCM	2 × 500 MCM	2 × 500 MCM	2 × 500 MCM	2 × 500 MCM
Cable cross-sections, motor-side, max. connectable per phase [5]	mm^2 (DIN VDE)	2 × 240	2 × 240	2 × 240	2 × 240	2 × 240	2 × 240
	AWG/MCM (NEC, CEC)	2 × 500 MCM	2 × 500 MCM	2 × 500 MCM	2 × 500 MCM	2 × 500 MCM	2 × 500 MCM
PE connection, max. connection cross-section at enclosure with M12 screw [5]	mm^2 (DIN VDE)	2 × 240	2 × 240	2 × 240	2 × 240	2 × 240	2 × 240
	AWG/MCM (NEC, CEC)	2 × 500 MCM	2 × 500 MCM	2 × 500 MCM	2 × 500 MCM	2 × 500 MCM	2 × 500 MCM
Degree of protection		IP43	IP43	IP43	IP43	IP43	IP43
Dimensions (with cabinet doors and side panels)							
• Width	mm	3620	3620	3620	3620	3620	3620
• Height	mm	2280	2280	2280	2280	2280	2280
• Depth	mm	1275	1275	1275	1275	1275	1275
Circuit design (page 2/4)		①	①	①	①	①	①
Weight	kg	2600	2650	2650	2650	2700	2700

1) The figures for the rated input current and the power figures in hp and kW are approximate values which were determined for operation with induction motors and for a typical value of the cos phi power factor and efficiency of the motor. The hp figures are based on the NEC and CEC directives for the North American market. The kW values are quoted in steps which can be divided by 50.
Both approximate values need to be adapted to the motor which is actually used.

2) Approx. 5% of the power loss is dissipated into the atmosphere.

3) Without cooling system.

4) Plus 20 A precharging current for 25 s.

5) Figures refer to a subsystem; please refer to “Circuit designs” for the number of subsystems to be connected on the line and motor side.

Technical data (continued)

SINAMICS GM150 in IGBT version Water cooling, without sine-wave filter	Type	6SL3815-2LN33-5AA0	6SL3815-2LN34-0AA0	6SL3815-2LN34-5AA0	6SL3815-2LN35-0AA0	6SL3815-2LN35-5AA0
Output voltage 3.3 kV						
Type rating	kVA	2000	2300	2600	2900	3100
Shaft output [1]	kW	1650	1900	2150	2400	2650
	hp	2250	2500	3000	3250	3500
Rated output current	A	350	400	450	500	550
Input voltage	kV	2 × 1.7	2 × 1.7	2 × 1.7	2 × 1.7	2 × 1.7
Rated input current	A	2 × 309	2 × 360	2 × 406	2 × 453	2 × 484
Power loss [2] [3]	kW	28	32	34	38	40
Efficiency [3]	%	98.4	98.4	98.5	98.5	98.6
Max. current requirement of auxiliary supply 50/60 Hz 230 V AC	A	10	10	10	10	10
Max. current requirement of auxiliary supply 50/60 Hz 400 V 3 AC [4]	A	14	14	14	14	14
Cooling water requirement (raw-water/deionized water)	l/min	108	108	108	108	108
Sound pressure level L_{pA}	dB(A)	73	73	73	73	73
Measuring surface level L_s	dB(A)	18	18	18	18	18
Cable cross-sections, line-side, max. connectable per phase [5]	mm^2 (DIN VDE)	2 × 240	2 × 240	2 × 240	2 × 240	2 × 240
	AWG/MCM (NEC, CEC)	2 × 500 MCM	2 × 500 MCM	2 × 500 MCM	2 × 500 MCM	2 × 500 MCM
Cable cross-sections, motor-side, max. connectable per phase [5]	mm^2 (DIN VDE)	2 × 240	2 × 240	2 × 240	2 × 240	2 × 240
	AWG/MCM (NEC, CEC)	2 × 500 MCM	2 × 500 MCM	2 × 500 MCM	2 × 500 MCM	2 × 500 MCM
PE connection, max. connection cross-section at enclosure with M12 screw [5]	mm^2 (DIN VDE)	2 × 240	2 × 240	2 × 240	2 × 240	2 × 240
	AWG/MCM (NEC, CEC)	2 × 500 MCM	2 × 500 MCM	2 × 500 MCM	2 × 500 MCM	2 × 500 MCM
Degree of protection		IP43	IP43	IP43	IP43	IP43
Dimensions (with cabinet doors and side panels)						
• Width	mm	3620	3620	3620	3620	3620
• Height	mm	2280	2280	2280	2280	2280
• Depth	mm	1275	1275	1275	1275	1275
Circuit design (page 2/4)		①	①	①	①	①
Weight	kg	2750	2800	2800	2800	2850

1) The figures for the rated input current and the power figures in hp and kW are approximate values which were determined for operation with induction motors and for a typical value of the cos phi power factor and efficiency of the motor. The hp figures are based on the NEC and CEC directives for the North American market. The kW values are quoted in steps which can be divided by 50.
Both approximate values need to be adapted to the motor which is actually used.

2) Approx. 5% of the power loss is dissipated into the atmosphere.

3) Without cooling system.

4) Plus 20 A precharging current for 25 s.

5) Figures refer to a subsystem; please refer to “Circuit designs” for the number of subsystems to be connected on the line and motor side.

Technical data (continued)

SINAMICS GM150 in IGBT version Water cooling, without sine-wave filter	Type	6SL3815-2LN36-1AA0	6SL3815-2LN36-7AA0	6SL3815-2LN37-4AA0	6SL3815-2LN38-0AA0
Output voltage 3.3 kV					
Type rating	kVA	3500	3900	4200	4600
Shaft output [1]	kW	2900	3200	3500	3800
	hp	4000	4250	4500	5000
Rated output current	A	610	675	740	800
Input voltage	kV	2 × 1.7	2 × 1.7	2 × 1.7	2 × 1.7
Rated input current	A	2 × 547	2 × 609	2 × 656	2 × 719
Power loss [2] [3]	kW	46	51	55	60
Efficiency [3]	%	98.5	98.5	98.5	98.5
Max. current requirement of auxiliary supply 50/60 Hz 230 V AC	A	10	10	10	10
Max. current requirement of auxiliary supply 50/60 Hz 400 V 3 AC [4]	A	25	25	25	25
Cooling water requirement (raw-water/deionized water)	l/min	108	108	108	108
Sound pressure level L_{pA}	dB(A)	73	73	73	73
Measuring surface level L_s	dB(A)	18	18	18	18
Cable cross-sections, line-side, max. connectable per phase [5]	mm^2 (DIN VDE)	2 × 240	2 × 240	2 × 240	2 × 240
	AWG/MCM (NEC, CEC)	2 × 500 MCM	2 × 500 MCM	2 × 500 MCM	2 × 500 MCM
Cable cross-sections, motor-side, max. connectable per phase [5]	mm^2 (DIN VDE)	2 × 240	2 × 240	2 × 240	2 × 240
	AWG/MCM (NEC, CEC)	2 × 500 MCM	2 × 500 MCM	2 × 500 MCM	2 × 500 MCM
PE connection, max. connection cross-section at enclosure with M12 screw [5]	mm^2 (DIN VDE)	2 × 240	2 × 240	2 × 240	2 × 240
	AWG/MCM (NEC, CEC)	2 × 500 MCM	2 × 500 MCM	2 × 500 MCM	2 × 500 MCM
Degree of protection		IP43	IP43	IP43	IP43
Dimensions (with cabinet doors and side panels)					
• Width	mm	3620	3620	3620	3620
• Height	mm	2280	2280	2280	2280
• Depth	mm	1275	1275	1275	1275
Circuit design (page 2/4)		①	①	①	①
Weight	kg	2850	2850	2850	2850

1) The figures for the rated input current and the power figures in hp and kW are approximate values which were determined for operation with induction motors and for a typical value of the cos phi power factor and efficiency of the motor. The hp figures are based on the NEC and CEC directives for the North American market. The kW values are quoted in steps which can be divided by 50.
Both approximate values need to be adapted to the motor which is actually used.

2) Approx. 5% of the power loss is dissipated into the atmosphere.

3) Without cooling system.

4) Plus 20 A precharging current for 25 s.

5) Figures refer to a subsystem; please refer to “Circuit designs” for the number of subsystems to be connected on the line and motor side.

Technical data (continued)

SINAMICS GM150 in IGBT version Water cooling, without sine-wave filter	Type	6SL3815-2LN38-8AA0	6SL3815-2LN41-0AA0	6SL3815-2LN41-1AA0	6SL3815-2LN41-2AA0	6SL3815-2LN41-3AA0	6SL3815-2LN41-4AA0
Output voltage 3.3 kV							
Type rating	kVA	5100	5700	6300	6900	7400	8000
Shaft output [1]	kW	4250	4750	5300	5700	6200	6700
	hp	6000	6500	7000	7500	8000	9000
Rated output current	A	2 × 445	2 × 495	2 × 550	2 × 600	2 × 650	2 × 700
Input voltage	kV	2 × (2 × 1.7)	2 × (2 × 1.7)	2 × (2 × 1.7)	2 × (2 × 1.7)	2 × (2 × 1.7)	2 × (2 × 1.7)
Rated input current	A	2 × (2 × 399)	2 × (2 × 446)	2 × (2 × 492)	2 × (2 × 539)	2 × (2 × 578)	2 × (2 × 625)
Power loss [2] [3]	kW	66	74	82	90	96	104
Efficiency [3]	%	98.6	98.5	98.5	98.5	98.5	98.5
Max. current requirement of auxiliary supply 50/60 Hz 230 V AC	A	10	10	10	10	10	10
Max. current requirement of auxiliary supply 50/60 Hz 400 V 3 AC [4]	A	31	31	31	31	31	31
Cooling water requirement (raw-water/deionized water)	l/min	216	216	216	216	216	216
Sound pressure level L_{pA}	dB(A)	76	76	76	76	76	76
Measuring surface level L_s	dB(A)	19	19	19	19	19	19
Cable cross-sections, line-side, max. connectable per phase [5]	mm^2 (DIN VDE)	2 × 240	2 × 240	2 × 240	2 × 240	2 × 240	2 × 240
	AWG/MCM (NEC, CEC)	2 × 500 MCM	2 × 500 MCM	2 × 500 MCM	2 × 500 MCM	2 × 500 MCM	2 × 500 MCM
Cable cross-sections, motor-side, max. connectable per phase [5]	mm^2 (DIN VDE)	2 × 240	2 × 240	2 × 240	2 × 240	2 × 240	2 × 240
	AWG/MCM (NEC, CEC)	2 × 500 MCM	2 × 500 MCM	2 × 500 MCM	2 × 500 MCM	2 × 500 MCM	2 × 500 MCM
PE connection, max. connection cross-section at enclosure with M12 screw [5]	mm^2 (DIN VDE)	2 × 240	2 × 240	2 × 240	2 × 240	2 × 240	2 × 240
	AWG/MCM (NEC, CEC)	2 × 500 MCM	2 × 500 MCM	2 × 500 MCM	2 × 500 MCM	2 × 500 MCM	2 × 500 MCM
Degree of protection		IP43	IP43	IP43	IP43	IP43	IP43
Dimensions (with cabinet doors and side panels)							
• Width	mm	5420	5420	5420	5420	5420	5420
• Height	mm	2280	2280	2280	2280	2280	2280
• Depth	mm	1275	1275	1275	1275	1275	1275
Circuit design (page 2/4)		③	③	③	③	③	③
Weight	kg	4100	4200	4200	4200	4200	4200

1) The figures for the rated input current and the power figures in hp and kW are approximate values which were determined for operation with induction motors and for a typical value of the cos phi power factor and efficiency of the motor. The hp figures are based on the NEC and CEC directives for the North American market. The kW values are quoted in steps which can be divided by 50.
Both approximate values need to be adapted to the motor which is actually used.

2) Approx. 5% of the power loss is dissipated into the atmosphere.

3) Without cooling system.

4) Plus 20 A precharging current for 25 s.

5) Figures refer to a subsystem; please refer to “Circuit designs” for the number of subsystems to be connected on the line and motor side.

Technical data (continued)

SINAMICS GM150 in IGBT version Water cooling, without sine-wave filter	Type	6SL3815-2LP32-8AA0	6SL3815-2LP33-1AA0	6SL3815-2LP33-5AA0	6SL3815-2LP34-0AA0	6SL3815-2LP34-5AA0	6SL3815-2LP35-0AA0
Output voltage 4.16 kV							
Type rating	kVA	2000	2200	2500	2900	3200	3600
Shaft output [1]	kW	1700	1850	2100	2400	2700	3000
	hp	2250	2500	2750	3000	3500	4000
Rated output current	A	280	310	350	400	450	500
Input voltage	kV	2 × 2.2	2 × 2.2	2 × 2.2	2 × 2.2	2 × 2.2	2 × 2.2
Rated input current	A	2 × 245	2 × 273	2 × 310	2 × 359	2 × 397	2 × 446
Power loss [2] [3]	kW	28	31	33	38	42	47
Efficiency [3]	%	98.4	98.4	98.5	98.5	98.5	98.5
Max. current requirement of auxiliary supply 50/60 Hz 230 V AC	A	10	10	10	10	10	10
Max. current requirement of auxiliary supply 50/60 Hz 400 V 3 AC [4]	A	25	25	25	25	25	25
Cooling water requirement (raw-water/deionized water)	l/min	108	108	108	108	108	108
Sound pressure level L_{pA}	dB(A)	73	73	73	73	73	73
Measuring surface level L_s	dB(A)	18	18	18	18	18	18
Cable cross-sections, line-side, max. connectable per phase [5]	mm^2 (DIN VDE)	2 × 240	2 × 240	2 × 240	2 × 240	2 × 240	2 × 240
	AWG/MCM (NEC, CEC)	2 × 500 MCM	2 × 500 MCM	2 × 500 MCM	2 × 500 MCM	2 × 500 MCM	2 × 500 MCM
Cable cross-sections, motor-side, max. connectable per phase [5]	mm^2 (DIN VDE)	2 × 240	2 × 240	2 × 240	2 × 240	2 × 240	2 × 240
	AWG/MCM (NEC, CEC)	2 × 500 MCM	2 × 500 MCM	2 × 500 MCM	2 × 500 MCM	2 × 500 MCM	2 × 500 MCM
PE connection, max. connection cross-section at enclosure with M12 screw [5]	mm^2 (DIN VDE)	2 × 240	2 × 240	2 × 240	2 × 240	2 × 240	2 × 240
	AWG/MCM (NEC, CEC)	2 × 500 MCM	2 × 500 MCM	2 × 500 MCM	2 × 500 MCM	2 × 500 MCM	2 × 500 MCM
Degree of protection		IP43	IP43	IP43	IP43	IP43	IP43
Dimensions (with cabinet doors and side panels)							
• Width	mm	3620	3620	3620	3620	3620	3620
• Height	mm	2280	2280	2280	2280	2280	2280
• Depth	mm	1275	1275	1275	1275	1275	1275
Circuit design (page 2/4)		①	①	①	①	①	①
Weight	kg	2750	2800	2800	2800	2850	2850

1) The figures for the rated input current and the power figures in hp and kW are approximate values which were determined for operation with induction motors and for a typical value of the cos phi power factor and efficiency of the motor. The hp figures are based on the NEC and CEC directives for the North American market. The kW values are quoted in steps which can be divided by 50.
Both approximate values need to be adapted to the motor which is actually used.

2) Approx. 5% of the power loss is dissipated into the atmosphere.

3) Without cooling system.

4) Plus 20 A precharging current for 25 s.

5) Figures refer to a subsystem; please refer to “Circuit designs” for the number of subsystems to be connected on the line and motor side.

Technical data (continued)

SINAMICS GM150 in IGBT version Water cooling, without sine-wave filter	Type	6SL3815-2LP35-5AA0	6SL3815-2LP36-1AA0	6SL3815-2LP36-7AA0	6SL3815-2LP37-4AA0	6SL3815-2LP38-0AA0
Output voltage 4.16 kV						
Type rating	kVA	4000	4400	4900	5300	5800
Shaft output [1]	kW	3300	3700	4100	4500	4800
	hp	4500	5000	5500	6000	6500
Rated output current	A	550	610	675	740	800
Input voltage	kV	2 × 2.2	2 × 2.2	2 × 2.2	2 × 2.2	2 × 2.2
Rated input current	A	2 × 496	2 × 545	2 × 607	2 × 657	2 × 719
Power loss [2] [3]	kW	52	57	64	69	75
Efficiency [3]	%	98.5	98.5	98.5	98.5	98.6
Max. current requirement of auxiliary supply 50/60 Hz 230 V AC	A	10	10	10	10	10
Max. current requirement of auxiliary supply 50/60 Hz 400 V 3 AC [4]	A	25	25	25	25	25
Cooling water requirement (raw-water/deionized water)	l/min	108	108	108	108	108
Sound pressure level L_{pA}	dB(A)	73	73	73	73	73
Measuring surface level L_s	dB(A)	18	18	18	18	18
Cable cross-sections, line-side, max. connectable per phase [5]	mm^2 (DIN VDE)	2 × 240	2 × 240	2 × 240	2 × 240	2 × 240
	AWG/MCM (NEC, CEC)	2 × 500 MCM	2 × 500 MCM	2 × 500 MCM	2 × 500 MCM	2 × 500 MCM
Cable cross-sections, motor-side, max. connectable per phase [5]	mm^2 (DIN VDE)	2 × 240	2 × 240	2 × 240	2 × 240	2 × 240
	AWG/MCM (NEC, CEC)	2 × 500 MCM	2 × 500 MCM	2 × 500 MCM	2 × 500 MCM	2 × 500 MCM
PE connection, max. connection cross-section at enclosure with M12 screw [5]	mm^2 (DIN VDE)	2 × 240	2 × 240	2 × 240	2 × 240	2 × 240
	AWG/MCM (NEC, CEC)	2 × 500 MCM	2 × 500 MCM	2 × 500 MCM	2 × 500 MCM	2 × 500 MCM
Degree of protection		IP43	IP43	IP43	IP43	IP43
Dimensions (with cabinet doors and side panels)						
• Width	mm	3620	3620	3620	3620	3620
• Height	mm	2280	2280	2280	2280	2280
• Depth	mm	1275	1275	1275	1275	1275
Circuit design (page 2/4)		①	①	①	①	①
Weight	kg	2850	2850	2850	2850	2850

1) The figures for the rated input current and the power figures in hp and kW are approximate values which were determined for operation with induction motors and for a typical value of the cos phi power factor and efficiency of the motor. The hp figures are based on the NEC and CEC directives for the North American market. The kW values are quoted in steps which can be divided by 50.
Both approximate values need to be adapted to the motor which is actually used.

2) Approx. 5% of the power loss is dissipated into the atmosphere.

3) Without cooling system.

4) Plus 20 A precharging current for 25 s.

5) Figures refer to a subsystem; please refer to “Circuit designs” for the number of subsystems to be connected on the line and motor side.

Technical data (continued)

SINAMICS GM150 in IGBT version Water cooling, without sine-wave filter	Type	6SL3815-2LP38-8AA0	6SL3815-2LP41-0AA0	6SL3815-2LP41-1AA0	6SL3815-2LP41-2AA0	6SL3815-2LP41-3AA0	6SL3815-2LP41-4AA0
Output voltage 4.16 kV							
Type rating	kVA	6400	7100	7900	8600	9400	10100
Shaft output [1]	kW	5400	6000	6600	7300	7900	8500
	hp	7000	8000	9000	9500	10000	11000
Rated output current	A	2 × 445	2 × 495	2 × 550	2 × 600	2 × 650	2 × 700
Input voltage	kV	2 × (2 × 2.2)	2 × (2 × 2.2)	2 × (2 × 2.2)	2 × (2 × 2.2)	2 × (2 × 2.2)	2 × (2 × 2.2)
Rated input current	A	2 × (2 × 397)	2 × (2 × 440)	2 × (2 × 490)	2 × (2 × 533)	2 × (2 × 583)	2 × (2 × 627)
Power loss [2] [3]	kW	83	92	103	112	122	131
Efficiency [3]	%	98.5	98.5	98.5	98.5	98.5	98.5
Max. current requirement of auxiliary supply 50/60 Hz 230 V AC	A	10	10	10	10	10	10
Max. current requirement of auxiliary supply 50/60 Hz 400 V 3 AC [4]	A	31	31	31	31	31	31
Cooling water requirement (raw-water/deionized water)	l/min	216	216	216	216	216	216
Sound pressure level L_{pA}	dB(A)	76	76	76	76	76	76
Measuring surface level L_s	dB(A)	19	19	19	19	19	19
Cable cross-sections, line-side, max. connectable per phase [5]	mm^2 (DIN VDE)	2 × 240	2 × 240	2 × 240	2 × 240	2 × 240	2 × 240
	AWG/MCM (NEC, CEC)	2 × 500 MCM	2 × 500 MCM	2 × 500 MCM	2 × 500 MCM	2 × 500 MCM	2 × 500 MCM
Cable cross-sections, motor-side, max. connectable per phase [5]	mm^2 (DIN VDE)	2 × 240	2 × 240	2 × 240	2 × 240	2 × 240	2 × 240
	AWG/MCM (NEC, CEC)	2 × 500 MCM	2 × 500 MCM	2 × 500 MCM	2 × 500 MCM	2 × 500 MCM	2 × 500 MCM
PE connection, max. connection cross-section at enclosure with M12 screw [5]	mm^2 (DIN VDE)	2 × 240	2 × 240	2 × 240	2 × 240	2 × 240	2 × 240
	AWG/MCM (NEC, CEC)	2 × 500 MCM	2 × 500 MCM	2 × 500 MCM	2 × 500 MCM	2 × 500 MCM	2 × 500 MCM
Degree of protection		IP43	IP43	IP43	IP43	IP43	IP43
Dimensions (with cabinet doors and side panels)							
• Width	mm	5420	5420	5420	5420	5420	5420
• Height	mm	2280	2280	2280	2280	2280	2280
• Depth	mm	1275	1275	1275	1275	1275	1275
Circuit design (page 2/4)		③	③	③	③	③	③
Weight	kg	4200	4200	4200	4200	4200	4200

1) The figures for the rated input current and the power figures in hp and kW are approximate values which were determined for operation with induction motors and for a typical value of the cos phi power factor and efficiency of the motor. The hp figures are based on the NEC and CEC directives for the North American market. The kW values are quoted in steps which can be divided by 50.
Both approximate values need to be adapted to the motor which is actually used.

2) Approx. 5% of the power loss is dissipated into the atmosphere.

3) Without cooling system.

4) Plus 20 A precharging current for 25 s.

5) Figures refer to a subsystem; please refer to “Circuit designs” for the number of subsystems to be connected on the line and motor side.

Technical data (continued)

SINAMICS GM150 in IGBT version Water cooling, without sine-wave filter	Type	6SL3815-2LQ31-7AA0	6SL3815-2LQ32-0AA0	6SL3815-2LQ32-3AA0	6SL3815-2LQ32-6AA0
Output voltage 6.0 kV					
Type rating	kVA	1800	2100	2400	2700
Shaft output [1]	kW	1450	1750	2000	2250
	hp	2000	2250	2500	3000
Rated output current	A	170	200	230	260
Input voltage	kV	2 × 2 × 1.55	2 × 2 × 1.55	2 × 2 × 1.55	2 × 2 × 1.55
Rated input current	A	2 × 2 × 152	2 × 2 × 181	2 × 2 × 206	2 × 2 × 232
Power loss [2] [3]	kW	27	29	34	35
Efficiency [3]	%	98.3	98.5	98.4	98.5
Max. current requirement of auxiliary supply 50/60 Hz 230 V AC	A	10	10	10	10
Max. current requirement of auxiliary supply 50/60 Hz 400 V 3 AC [4]	A	25	25	25	25
Cooling water requirement (raw-water/deionized water)	l/min	126	126	126	126
Sound pressure level L_{pA}	dB(A)	75	75	75	75
Measuring surface level L_s	dB(A)	19	19	19	19
Cable cross-sections, line-side, max. connectable per phase [5]	mm^2 (DIN VDE)	2 × 240	2 × 240	2 × 240	2 × 240
	AWG/MCM (NEC, CEC)	2 × 500 MCM	2 × 500 MCM	2 × 500 MCM	2 × 500 MCM
Cable cross-sections, motor-side, max. connectable per phase [5]	mm^2 (DIN VDE)	2 × 240	2 × 240	2 × 240	2 × 240
	AWG/MCM (NEC, CEC)	2 × 500 MCM	2 × 500 MCM	2 × 500 MCM	2 × 500 MCM
PE connection, max. connection cross-section at enclosure with M12 screw [5]	mm^2 (DIN VDE)	2 × 240	2 × 240	2 × 240	2 × 240
	AWG/MCM (NEC, CEC)	2 × 500 MCM	2 × 500 MCM	2 × 500 MCM	2 × 500 MCM
Degree of protection		IP43	IP43	IP43	IP43
Dimensions (with cabinet doors and side panels)					
• Width	mm	4220	4220	4220	4220
• Height	mm	2280	2280	2280	2280
• Depth	mm	1275	1275	1275	1275
Circuit design (page 2/4)		②	②	②	②
Weight	kg	3050	3100	3100	3100

1) The figures for the rated input current and the power figures in hp and kW are approximate values which were determined for operation with induction motors and for a typical value of the cos phi power factor and efficiency of the motor. The hp figures are based on the NEC and CEC directives for the North American market. The kW values are quoted in steps which can be divided by 50.
Both approximate values need to be adapted to the motor which is actually used.

2) Approx. 5% of the power loss is dissipated into the atmosphere.

3) Without cooling system.

4) Plus 20 A precharging current for 25 s.

5) Figures refer to a subsystem; please refer to “Circuit designs” for the number of subsystems to be connected on the line and motor side.

Technical data (continued)

SINAMICS GM150 in IGBT version Water cooling, without sine-wave filter	Type	6SL3815-2LQ33-0AA0	6SL3815-2LQ33-2AA0	6SL3815-2LQ33-6AA0	6SL3815-2LQ33-8AA0
Output voltage 6.0 kV					
Type rating	kVA	3000	3400	3700	4100
Shaft output [1]	kW	2500	2800	3100	3400
	hp	3500	3750	4000	4500
Rated output current	A	290	325	360	390
Input voltage	kV	2 × 2 × 1.55	2 × 2 × 1.55	2 × 2 × 1.55	2 × 2 × 1.55
Rated input current	A	2 × 2 × 258	2 × 2 × 292	2 × 2 × 318	2 × 2 × 352
Power loss [2] [3]	kW	39	44	48	53
Efficiency [3]	%	98.5	98.6	98.5	98.6
Max. current requirement of auxiliary supply 50/60 Hz 230 V AC	A	10	10	10	10
Max. current requirement of auxiliary supply 50/60 Hz 400 V 3 AC [4]	A	25	25	25	25
Cooling water requirement (raw-water/deionized water)	l/min	126	126	126	126
Sound pressure level L_{pA}	dB(A)	75	75	75	75
Measuring surface level L_s	dB(A)	19	19	19	19
Cable cross-sections, line-side, max. connectable per phase [5]	mm^2 (DIN VDE)	2 × 240	2 × 240	2 × 240	2 × 240
	AWG/MCM (NEC, CEC)	2 × 500 MCM	2 × 500 MCM	2 × 500 MCM	2 × 500 MCM
Cable cross-sections, motor-side, max. connectable per phase [5]	mm^2 (DIN VDE)	2 × 240	2 × 240	2 × 240	2 × 240
	AWG/MCM (NEC, CEC)	2 × 500 MCM	2 × 500 MCM	2 × 500 MCM	2 × 500 MCM
PE connection, max. connection cross-section at enclosure with M12 screw [5]	mm^2 (DIN VDE)	2 × 240	2 × 240	2 × 240	2 × 240
	AWG/MCM (NEC, CEC)	2 × 500 MCM	2 × 500 MCM	2 × 500 MCM	2 × 500 MCM
Degree of protection		IP43	IP43	IP43	IP43
Dimensions (with cabinet doors and side panels)					
• Width	mm	4220	4220	4220	4220
• Height	mm	2280	2280	2280	2280
• Depth	mm	1275	1275	1275	1275
Circuit design (page 2/4)		②	②	②	②
Weight	kg	3150	3150	3150	3150

1) The figures for the rated input current and the power figures in hp and kW are approximate values which were determined for operation with induction motors and for a typical value of the cos phi power factor and efficiency of the motor. The hp figures are based on the NEC and CEC directives for the North American market. The kW values are quoted in steps which can be divided by 50.
Both approximate values need to be adapted to the motor which is actually used.

2) Approx. 5% of the power loss is dissipated into the atmosphere.

3) Without cooling system.

4) Plus 20 A precharging current for 25 s.

5) Figures refer to a subsystem; please refer to “Circuit designs” for the number of subsystems to be connected on the line and motor side.

Technical data (continued)

SINAMICS GM150 in IGBT version Water cooling, without sine-wave filter	Type	6SL3815-2LQ34-3AA0	6SL3815-2LQ34-7AA0	6SL3815-2LQ35-3AA0	6SL3815-2LQ35-8AA0	6SL3815-2LQ36-4AA0	6SL3815-2LQ37-0AA0
Output voltage 6.0 kV							
Type rating	kVA	4500	4900	5500	6100	6700	7300
Shaft output [1]	kW	3700	4100	4600	5100	5600	6100
	hp	5000	5500	6000	6500	7000	8000
Rated output current	A	2 × 215	2 × 235	2 × 265	2 × 292	2 × 320	2 × 350
Input voltage	kV	2 × 2 × 1.55	2 × 2 × 1.55	2 × 2 × 1.55	2 × 2 × 1.55	2 × 2 × 1.55	2 × 2 × 1.55
Rated input current	A	2 × 2 × 387	2 × 2 × 421	2 × 2 × 473	2 × 2 × 524	2 × 2 × 576	2 × 2 × 627
Power loss [2] [3]	kW	59	64	72	79	87	95
Efficiency [3]	%	98.5	98.5	98.5	98.5	98.5	98.5
Max. current requirement of auxiliary supply 50/60 Hz 230 V AC	A	10	10	10	10	10	10
Max. current requirement of auxiliary supply 50/60 Hz 400 V 3 AC [4]	A	31	31	31	31	31	31
Cooling water requirement (raw-water/deionized water)	l/min	216	216	216	216	216	216
Sound pressure level L_{pA}	dB(A)	78	78	78	78	78	78
Measuring surface level L_s	dB(A)	19	19	19	19	19	19
Cable cross-sections, line-side, max. connectable per phase [5]	mm^2 (DIN VDE)	2 × 240	2 × 240	2 × 240	2 × 240	2 × 240	2 × 240
	AWG/MCM (NEC, CEC)	2 × 500 MCM	2 × 500 MCM	2 × 500 MCM	2 × 500 MCM	2 × 500 MCM	2 × 500 MCM
Cable cross-sections, motor-side, max. connectable per phase [5]	mm^2 (DIN VDE)	2 × 240	2 × 240	2 × 240	2 × 240	2 × 240	2 × 240
	AWG/MCM (NEC, CEC)	2 × 500 MCM	2 × 500 MCM	2 × 500 MCM	2 × 500 MCM	2 × 500 MCM	2 × 500 MCM
PE connection, max. connection cross-section at enclosure with M12 screw [5]	mm^2 (DIN VDE)	2 × 240	2 × 240	2 × 240	2 × 240	2 × 240	2 × 240
	AWG/MCM (NEC, CEC)	2 × 500 MCM	2 × 500 MCM	2 × 500 MCM	2 × 500 MCM	2 × 500 MCM	2 × 500 MCM
Degree of protection		IP43	IP43	IP43	IP43	IP43	IP43
Dimensions (with cabinet doors and side panels)							
• Width	mm	5420	5420	5420	5420	5420	5420
• Height	mm	2280	2280	2280	2280	2280	2280
• Depth	mm	1275	1275	1275	1275	1275	1275
Circuit design (page 2/4)		④	④	④	④	④	④
Weight	kg	4100	4200	4200	4300	4300	4300

1) The figures for the rated input current and the power figures in hp and kW are approximate values which were determined for operation with induction motors and for a typical value of the cos phi power factor and efficiency of the motor. The hp figures are based on the NEC and CEC directives for the North American market. The kW values are quoted in steps which can be divided by 50.
Both approximate values need to be adapted to the motor which is actually used.

2) Approx. 5% of the power loss is dissipated into the atmosphere.

3) Without cooling system.

4) Plus 20 A precharging current for 25 s.

5) Figures refer to a subsystem; please refer to “Circuit designs” for the number of subsystems to be connected on the line and motor side.

Technical data (continued)

SINAMICS GM150 in IGBT version Water cooling, without sine-wave filter	Type	6SL3815-2LR31-7AA0	6SL3815-2LR32-0AA0	6SL3815-2LR32-3AA0	6SL3815-2LR32-6AA0
Output voltage 6.6 kV					
Type rating	kVA	1900	2300	2600	3000
Shaft output [1]	kW	1600	1900	2200	2500
	hp	2000	2500	3000	3250
Rated output current	A	170	200	230	260
Input voltage	kV	2 × 2 × 1.7	2 × 2 × 1.7	2 × 2 × 1.7	2 × 2 × 1.7
Rated input current	A	2 × 2 × 147	2 × 2 × 180	2 × 2 × 203	2 × 2 × 234
Power loss [2] [3]	kW	27	32	34	39
Efficiency [3]	%	98.4	98.4	98.5	98.5
Max. current requirement of auxiliary supply 50/60 Hz 230 V AC	A	10	10	10	10
Max. current requirement of auxiliary supply 50/60 Hz 400 V 3 AC [4]	A	25	25	25	25
Cooling water requirement (raw-water/deionized water)	l/min	126	126	126	126
Sound pressure level L_{pA}	dB(A)	75	75	75	75
Measuring surface level L_s	dB(A)	19	19	19	19
Cable cross-sections, line-side, max. connectable per phase [5]	mm^2 (DIN VDE)	2 × 240	2 × 240	2 × 240	2 × 240
	AWG/MCM (NEC, CEC)	2 × 500 MCM	2 × 500 MCM	2 × 500 MCM	2 × 500 MCM
Cable cross-sections, motor-side, max. connectable per phase [5]	mm^2 (DIN VDE)	2 × 240	2 × 240	2 × 240	2 × 240
	AWG/MCM (NEC, CEC)	2 × 500 MCM	2 × 500 MCM	2 × 500 MCM	2 × 500 MCM
PE connection, max. connection cross-section at enclosure with M12 screw [5]	mm^2 (DIN VDE)	2 × 240	2 × 240	2 × 240	2 × 240
	AWG/MCM (NEC, CEC)	2 × 500 MCM	2 × 500 MCM	2 × 500 MCM	2 × 500 MCM
Degree of protection		IP43	IP43	IP43	IP43
Dimensions (with cabinet doors and side panels)					
• Width	mm	4220	4220	4220	4220
• Height	mm	2280	2280	2280	2280
• Depth	mm	1275	1275	1275	1275
Circuit design (page 2/4)		②	②	②	②
Weight	kg	3050	3100	3100	3100

1) The figures for the rated input current and the power figures in hp and kW are approximate values which were determined for operation with induction motors and for a typical value of the cos phi power factor and efficiency of the motor. The hp figures are based on the NEC and CEC directives for the North American market. The kW values are quoted in steps which can be divided by 50.
Both approximate values need to be adapted to the motor which is actually used.

2) Approx. 5% of the power loss is dissipated into the atmosphere.

3) Without cooling system.

4) Plus 20 A precharging current for 25 s.

5) Figures refer to a subsystem; please refer to “Circuit designs” for the number of subsystems to be connected on the line and motor side.

Technical data (continued)

SINAMICS GM150 in IGBT version Water cooling, without sine-wave filter	Type	6SL3815-2LR33-0AA0	6SL3815-2LR33-2AA0	6SL3815-2LR33-6AA0	6SL3815-2LR33-8AA0
Output voltage 6.6 kV					
Type rating	kVA	3300	3700	4100	4500
Shaft output [1]	kW	2800	3100	3400	3700
	hp	3500	4000	4500	5000
Rated output current	A	290	325	360	390
Input voltage	kV	2 × 2 × 1.7	2 × 2 × 1.7	2 × 2 × 1.7	2 × 2 × 1.7
Rated input current	A	2 × 2 × 258	2 × 2 × 289	2 × 2 × 320	2 × 2 × 352
Power loss [2] [3]	kW	43	48	53	59
Efficiency [3]	%	98.5	98.5	98.6	98.5
Max. current requirement of auxiliary supply 50/60 Hz 230 V AC	A	10	10	10	10
Max. current requirement of auxiliary supply 50/60 Hz 400 V 3 AC [4]	A	25	25	25	25
Cooling water requirement (raw-water/deionized water)	l/min	126	126	126	126
Sound pressure level L_{pA}	dB(A)	75	75	75	75
Measuring surface level L_s	dB(A)	19	19	19	19
Cable cross-sections, line-side, max. connectable per phase [5]	mm^2 (DIN VDE)	2 × 240	2 × 240	2 × 240	2 × 240
	AWG/MCM (NEC, CEC)	2 × 500 MCM	2 × 500 MCM	2 × 500 MCM	2 × 500 MCM
Cable cross-sections, motor-side, max. connectable per phase [5]	mm^2 (DIN VDE)	2 × 240	2 × 240	2 × 240	2 × 240
	AWG/MCM (NEC, CEC)	2 × 500 MCM	2 × 500 MCM	2 × 500 MCM	2 × 500 MCM
PE connection, max. connection cross-section at enclosure with M12 screw [5]	mm^2 (DIN VDE)	2 × 240	2 × 240	2 × 240	2 × 240
	AWG/MCM (NEC, CEC)	2 × 500 MCM	2 × 500 MCM	2 × 500 MCM	2 × 500 MCM
Degree of protection		IP43	IP43	IP43	IP43
Dimensions (with cabinet doors and side panels)					
• Width	mm	4220	4220	4220	4220
• Height	mm	2280	2280	2280	2280
• Depth	mm	1275	1275	1275	1275
Circuit design (page 2/4)		②	②	②	②
Weight	kg	3100	3150	3150	3150

1) The figures for the rated input current and the power figures in hp and kW are approximate values which were determined for operation with induction motors and for a typical value of the cos phi power factor and efficiency of the motor. The hp figures are based on the NEC and CEC directives for the North American market. The kW values are quoted in steps which can be divided by 50.
Both approximate values need to be adapted to the motor which is actually used.

2) Approx. 5% of the power loss is dissipated into the atmosphere.

3) Without cooling system.

4) Plus 20 A precharging current for 25 s.

5) Figures refer to a subsystem; please refer to “Circuit designs” for the number of subsystems to be connected on the line and motor side.

Technical data (continued)

SINAMICS GM150 in IGBT version Water cooling, without sine-wave filter	Type	6SL3815-2LR34-3AA0	6SL3815-2LR34-7AA0	6SL3815-2LR35-3AA0	6SL3815-2LR35-8AA0	6SL3815-2LR36-4AA0	6SL3815-2LR37-0AA0
Output voltage 6.6 kV							
Type rating	kVA	4900	5400	6100	6700	7300	8000
Shaft output [1]	kW	4100	4500	5100	5600	6100	6700
	hp	5500	6000	6500	7000	8000	9000
Rated output current	A	2 × 215	2 × 235	2 × 265	2 × 292	2 × 320	2 × 350
Input voltage	kV	2 × 2 × 1.7	2 × 2 × 1.7	2 × 2 × 1.7	2 × 2 × 1.7	2 × 2 × 1.7	2 × 2 × 1.7
Rated input current	A	2 × 2 × 383	2 × 2 × 422	2 × 2 × 476	2 × 2 × 523	2 × 2 × 570	2 × 2 × 625
Power loss [2] [3]	kW	64	70	79	87	95	104
Efficiency [3]	%	98.5	98.5	98.5	98.5	98.5	98.5
Max. current requirement of auxiliary supply 50/60 Hz 230 V AC	A	10	10	10	10	10	10
Max. current requirement of auxiliary supply 50/60 Hz 400 V 3 AC [4]	A	31	31	31	31	31	31
Cooling water requirement (raw-water/deionized water)	l/min	216	216	216	216	216	216
Sound pressure level L_{pA}	dB(A)	78	78	78	78	78	78
Measuring surface level L_s	dB(A)	19	19	19	19	19	19
Cable cross-sections, line-side, max. connectable per phase [5]	mm^2 (DIN VDE)	2 × 240	2 × 240	2 × 240	2 × 240	2 × 240	2 × 240
	AWG/MCM (NEC, CEC)	2 × 500 MCM	2 × 500 MCM	2 × 500 MCM	2 × 500 MCM	2 × 500 MCM	2 × 500 MCM
Cable cross-sections, motor-side, max. connectable per phase [5]	mm^2 (DIN VDE)	2 × 240	2 × 240	2 × 240	2 × 240	2 × 240	2 × 240
	AWG/MCM (NEC, CEC)	2 × 500 MCM	2 × 500 MCM	2 × 500 MCM	2 × 500 MCM	2 × 500 MCM	2 × 500 MCM
PE connection, max. connection cross-section at enclosure with M12 screw [5]	mm^2 (DIN VDE)	2 × 240	2 × 240	2 × 240	2 × 240	2 × 240	2 × 240
	AWG/MCM (NEC, CEC)	2 × 500 MCM	2 × 500 MCM	2 × 500 MCM	2 × 500 MCM	2 × 500 MCM	2 × 500 MCM
Degree of protection		IP43	IP43	IP43	IP43	IP43	IP43
Dimensions (with cabinet doors and side panels)							
• Width	mm	5420	5420	5420	5420	5420	5420
• Height	mm	2280	2280	2280	2280	2280	2280
• Depth	mm	1275	1275	1275	1275	1275	1275
Circuit design (page 2/4)		④	④	④	④	④	④
Weight	kg	4200	4200	4200	4300	4300	4300

1) The figures for the rated input current and the power figures in hp and kW are approximate values which were determined for operation with induction motors and for a typical value of the cos phi power factor and efficiency of the motor. The hp figures are based on the NEC and CEC directives for the North American market. The kW values are quoted in steps which can be divided by 50.
Both approximate values need to be adapted to the motor which is actually used.

2) Approx. 5% of the power loss is dissipated into the atmosphere.

3) Without cooling system.

4) Plus 20 A precharging current for 25 s.

5) Figures refer to a subsystem; please refer to “Circuit designs” for the number of subsystems to be connected on the line and motor side.

Technical data (continued)

SINAMICS GM150 in IGBT version Water cooling, with sine-wave filter (option Y15)	Type	6SL3815-2LM35-0AA0	6SL3815-2LM35-5AA0	6SL3815-2LM36-1AA0	6SL3815-2LM36-7AA0	6SL3815-2LM37-4AA0	6SL3815-2LM38-0AA0
Output voltage 2.3 kV							
Type rating	kVA	1500	1650	1800	2050	2200	2400
Shaft output [1]	kW	1250	1350	1500	1700	1850	2000
	hp	1500	1750	2000	2250	2500	2750
Rated output current	A	380	410	450	510	550	600
Input voltage	kV	2 × 1.2	2 × 1.2	2 × 1.2	2 × 1.2	2 × 1.2	2 × 1.2
Rated input current	A	2 × 331	2 × 364	2 × 397	2 × 453	2 × 491	2 × 540
Power loss [2] [3]	kW	29	30	32	37	39	41
Efficiency [3]	%	97.8	97.9	98.0	97.9	98.0	98.1
Max. current requirement of auxiliary supply 50/60 Hz 230 V AC	A	10	10	10	10	10	10
Max. current requirement of auxiliary supply 50/60 Hz 400 V 3 AC [4]	A	31	31	31	31	31	31
Cooling water requirement (raw-water/deionized water)	l/min	112	112	112	112	112	112
Sound pressure level L_{pA}	dB(A)	74	74	74	74	74	74
Measuring surface level L_s	dB(A)	18	18	18	18	18	18
Cable cross-sections, line-side, max. connectable per phase [5]	mm^2 (DIN VDE)	2 × 240	2 × 240	2 × 240	2 × 240	2 × 240	2 × 240
	AWG/MCM (NEC, CEC)	2 × 500 MCM	2 × 500 MCM	2 × 500 MCM	2 × 500 MCM	2 × 500 MCM	2 × 500 MCM
Cable cross-sections, motor-side, max. connectable per phase [5]	mm^2 (DIN VDE)	2 × 240	2 × 240	2 × 240	2 × 240	2 × 240	2 × 240
	AWG/MCM (NEC, CEC)	2 × 500 MCM	2 × 500 MCM	2 × 500 MCM	2 × 500 MCM	2 × 500 MCM	2 × 500 MCM
PE connection, max. connection cross-section at enclosure with M12 screw [5]	mm^2 (DIN VDE)	2 × 240	2 × 240	2 × 240	2 × 240	2 × 240	2 × 240
	AWG/MCM (NEC, CEC)	2 × 500 MCM	2 × 500 MCM	2 × 500 MCM	2 × 500 MCM	2 × 500 MCM	2 × 500 MCM
Degree of protection		IP43	IP43	IP43	IP43	IP43	IP43
Dimensions (with cabinet doors and side panels)							
• Width	mm	4540	4540	4540	4540	4540	4540
• Height	mm	2280	2280	2280	2280	2280	2280
• Depth	mm	1275	1275	1275	1275	1275	1275
Circuit design (page 2/5)		⑤	⑤	⑤	⑤	⑤	⑤
Weight	kg	3750	3850	3850	3900	3950	3950

1) The figures for the rated input current and the power figures in hp and kW are approximate values which were determined for operation with induction motors and for a typical value of the cos phi power factor and efficiency of the motor. The hp figures are based on the NEC and CEC directives for the North American market. The kW values are quoted in steps which can be divided by 50.
Both approximate values need to be adapted to the motor which is actually used.

2) Approx. 5% of the power loss is dissipated into the atmosphere.

3) Without cooling system.

4) Plus 20 A precharging current for 25 s.

5) Figures refer to a subsystem; please refer to “Circuit designs” for the number of subsystems to be connected on the line and motor side.

Technical data (continued)

SINAMICS GM150 in IGBT version Water cooling, with sine-wave filter (option Y15)	Type	6SL3815-2LN33-5AA0	6SL3815-2LN34-0AA0	6SL3815-2LN34-5AA0	6SL3815-2LN35-0AA0
Output voltage 3.3 kV					
Type rating	kVA	1550	1750	2000	2150
Shaft output [1]	kW	1300	1450	1650	1800
	hp	1750	2000	2250	2500
Rated output current	A	270	310	350	380
Input voltage	kV	2 × 1.7	2 × 1.7	2 × 1.7	2 × 1.7
Rated input current	A	2 × 234	2 × 269	2 × 308	2 × 346
Power loss [2] [3]	kW	29	32	36	40
Efficiency [3]	%	97.8	97.9	98.0	98.0
Max. current requirement of auxiliary supply 50/60 Hz 230 V AC	A	10	10	10	10
Max. current requirement of auxiliary supply 50/60 Hz 400 V 3 AC [4]	A	31	31	31	31
Cooling water requirement (raw-water/deionized water)	l/min	148	148	148	148
Sound pressure level L_{pA}	dB(A)	74	74	74	74
Measuring surface level L_s	dB(A)	18	18	18	18
Cable cross-sections, line-side, max. connectable per phase [5]	mm^2 (DIN VDE)	2 × 240	2 × 240	2 × 240	2 × 240
	AWG/MCM (NEC, CEC)	2 × 500 MCM	2 × 500 MCM	2 × 500 MCM	2 × 500 MCM
Cable cross-sections, motor-side, max. connectable per phase [5]	mm^2 (DIN VDE)	2 × 240	2 × 240	2 × 240	2 × 240
	AWG/MCM (NEC, CEC)	2 × 500 MCM	2 × 500 MCM	2 × 500 MCM	2 × 500 MCM
PE connection, max. connection cross-section at enclosure with M12 screw [5]	mm^2 (DIN VDE)	2 × 240	2 × 240	2 × 240	2 × 240
	AWG/MCM (NEC, CEC)	2 × 500 MCM	2 × 500 MCM	2 × 500 MCM	2 × 500 MCM
Degree of protection		IP43	IP43	IP43	IP43
Dimensions (with cabinet doors and side panels)					
• Width	mm	4540	4540	4540	4540
• Height	mm	2280	2280	2280	2280
• Depth	mm	1275	1275	1275	1275
Circuit design (page 2/5)		⑤	⑤	⑤	⑤
Weight	kg	4000	4200	4200	4200

1) The figures for the rated input current and the power figures in hp and kW are approximate values which were determined for operation with induction motors and for a typical value of the cos phi power factor and efficiency of the motor. The hp figures are based on the NEC and CEC directives for the North American market. The kW values are quoted in steps which can be divided by 50.
Both approximate values need to be adapted to the motor which is actually used.

2) Approx. 5% of the power loss is dissipated into the atmosphere.

3) Without cooling system.

4) Plus 20 A precharging current for 25 s.

5) Figures refer to a subsystem; please refer to “Circuit designs” for the number of subsystems to be connected on the line and motor side.

Technical data (continued)

SINAMICS GM150 in IGBT version Water cooling, with sine-wave filter (option Y15)	Type	6SL3815-2LN35-5AA0	6SL3815-2LN36-1AA0	6SL3815-2LN36-7AA0	6SL3815-2LN37-4AA0	6SL3815-2LN38-0AA0
Output voltage 3.3 kV						
Type rating	kVA	2350	2700	2950	3200	3500
Shaft output [1]	kW	1950	2250	2500	2700	2900
	hp	2750	3000	3250	3500	4000
Rated output current	A	410	470	520	560	610
Input voltage	kV	2 × 1.7	2 × 1.7	2 × 1.7	2 × 1.7	2 × 1.7
Rated input current	A	2 × 370	2 × 417	2 × 465	2 × 501	2 × 549
Power loss [2] [3]	kW	42	45	50	54	60
Efficiency [3]	%	98.1	98.1	98.1	98.1	98.1
Max. current requirement of auxiliary supply 50/60 Hz 230 V AC	A	10	10	10	10	10
Max. current requirement of auxiliary supply 50/60 Hz 400 V 3 AC [4]	A	31	31	31	31	31
Cooling water requirement (raw-water/deionized water)	l/min	148	148	148	148	148
Sound pressure level L_{pA}	dB(A)	74	74	74	74	74
Measuring surface level L_s	dB(A)	18	18	18	18	18
Cable cross-sections, line-side, max. connectable per phase [5]	mm^2 (DIN VDE)	2 × 240	2 × 240	2 × 240	2 × 240	2 × 240
	AWG/MCM (NEC, CEC)	2 × 500 MCM	2 × 500 MCM	2 × 500 MCM	2 × 500 MCM	2 × 500 MCM
Cable cross-sections, motor-side, max. connectable per phase [5]	mm^2 (DIN VDE)	2 × 240	2 × 240	2 × 240	2 × 240	2 × 240
	AWG/MCM (NEC, CEC)	2 × 500 MCM	2 × 500 MCM	2 × 500 MCM	2 × 500 MCM	2 × 500 MCM
PE connection, max. connection cross-section at enclosure with M12 screw [5]	mm^2 (DIN VDE)	2 × 240	2 × 240	2 × 240	2 × 240	2 × 240
	AWG/MCM (NEC, CEC)	2 × 500 MCM	2 × 500 MCM	2 × 500 MCM	2 × 500 MCM	2 × 500 MCM
Degree of protection		IP43	IP43	IP43	IP43	IP43
Dimensions (with cabinet doors and side panels)						
• Width	mm	4840	4840	4840	4840	4840
• Height	mm	2280	2280	2280	2280	2280
• Depth	mm	1275	1275	1275	1275	1275
Circuit design (page 2/5)		⑤	⑤	⑤	⑤	⑤
Weight	kg	4300	4300	4400	4400	4400

1) The figures for the rated input current and the power figures in hp and kW are approximate values which were determined for operation with induction motors and for a typical value of the cos phi power factor and efficiency of the motor. The hp figures are based on the NEC and CEC directives for the North American market. The kW values are quoted in steps which can be divided by 50.
Both approximate values need to be adapted to the motor which is actually used.

2) Approx. 5% of the power loss is dissipated into the atmosphere.

3) Without cooling system.

4) Plus 20 A precharging current for 25 s.

5) Figures refer to a subsystem; please refer to “Circuit designs” for the number of subsystems to be connected on the line and motor side.

Technical data (continued)

SINAMICS GM150 in IGBT version Water cooling, with sine-wave filter (option Y15)	Type	6SL3815-2LN38-8AA0	6SL3815-2LN41-0AA0	6SL3815-2LN41-1AA0	6SL3815-2LN41-2AA0	6SL3815-2LN41-3AA0	6SL3815-2LN41-4AA0
Output voltage 3.3 kV							
Type rating	kVA	3900	4350	4800	5250	5600	6050
Shaft output [1]	kW	3250	3650	4000	4400	4700	5100
	hp	4500	5000	5500	6000	6250	6500
Rated output current	A	680	760	840	920	980	1060
Input voltage	kV	2 × (2 × 1.7)	2 × (2 × 1.7)	2 × (2 × 1.7)	2 × (2 × 1.7)	2 × (2 × 1.7)	2 × (2 × 1.7)
Rated input current	A	2 × (2 × 304)	2 × (2 × 340)	2 × (2 × 376)	2 × (2 × 411)	2 × (2 × 441)	2 × (2 × 477)
Power loss [2] [3]	kW	62	69	77	84	90	97
Efficiency [3]	%	98.2	98.2	98.2	98.2	98.2	98.2
Max. current requirement of auxiliary supply 50/60 Hz 230 V AC	A	10	10	10	10	10	10
Max. current requirement of auxiliary supply 50/60 Hz 400 V 3 AC [4]	A	43	43	43	43	43	43
Cooling water requirement (raw-water/deionized water)	l/min	296	296	296	296	296	296
Sound pressure level L_{pA}	dB(A)	78	78	78	78	78	78
Measuring surface level L_s	dB(A)	19	19	19	19	19	19
Cable cross-sections, line-side, max. connectable per phase [5]	mm^2 (DIN VDE)	2 × 240	2 × 240	2 × 240	2 × 240	2 × 240	2 × 240
	AWG/MCM (NEC, CEC)	2 × 500 MCM	2 × 500 MCM	2 × 500 MCM	2 × 500 MCM	2 × 500 MCM	2 × 500 MCM
Cable cross-sections, motor-side, max. connectable per phase [5]	mm^2 (DIN VDE)	2 × 240	2 × 240	2 × 240	2 × 240	2 × 240	2 × 240
	AWG/MCM (NEC, CEC)	2 × 500 MCM	2 × 500 MCM	2 × 500 MCM	2 × 500 MCM	2 × 500 MCM	2 × 500 MCM
PE connection, max. connection cross-section at enclosure with M12 screw [5]	mm^2 (DIN VDE)	2 × 240	2 × 240	2 × 240	2 × 240	2 × 240	2 × 240
	AWG/MCM (NEC, CEC)	2 × 500 MCM	2 × 500 MCM	2 × 500 MCM	2 × 500 MCM	2 × 500 MCM	2 × 500 MCM
Degree of protection		IP43	IP43	IP43	IP43	IP43	IP43
Dimensions (with cabinet doors and side panels)							
• Width	mm	7260	7260	7860	7860	7860	7860
• Height	mm	2280	2280	2280	2280	2280	2280
• Depth	mm	1275	1275	1275	1275	1275	1275
Circuit design (page 2/5)		⑦	⑦	⑦	⑦	⑦	⑦
Weight	kg	6900	7000	7100	7100	7100	7300

1) The figures for the rated input current and the power figures in hp and kW are approximate values which were determined for operation with induction motors and for a typical value of the cos phi power factor and efficiency of the motor. The hp figures are based on the NEC and CEC directives for the North American market. The kW values are quoted in steps which can be divided by 50.
Both approximate values need to be adapted to the motor which is actually used.

2) Approx. 5% of the power loss is dissipated into the atmosphere.

3) Without cooling system.

4) Plus 20 A precharging current for 25 s.

5) Figures refer to a subsystem; please refer to “Circuit designs” for the number of subsystems to be connected on the line and motor side.

Technical data (continued)

SINAMICS GM150 in IGBT version Water cooling, with sine-wave filter (option Y15)	Type	6SL3815-2LP32-8AA0	6SL3815-2LP33-1AA0	6SL3815-2LP33-5AA0	6SL3815-2LP34-0AA0	6SL3815-2LP34-5AA0	6SL3815-2LP35-0AA0
Output voltage 4.16 kV							
Type rating	kVA	1600	1750	1950	2250	2500	2800
Shaft output [1]	kW	1300	1450	1600	1850	2100	2350
	hp	1750	2000	2250	2500	2750	3000
Rated output current	A	220	240	270	310	350	390
Input voltage	kV	2 × 2.2	2 × 2.2	2 × 2.2	2 × 2.2	2 × 2.2	2 × 2.2
Rated input current	A	2 × 190	2 × 210	2 × 240	2 × 282	2 × 311	2 × 350
Power loss [2] [3]	kW	30	31	35	41	43	48
Efficiency [3]	%	97.8	97.9	98.0	98.0	98.1	98.1
Max. current requirement of auxiliary supply 50/60 Hz 230 V AC	A	10	10	10	10	10	10
Max. current requirement of auxiliary supply 50/60 Hz 400 V 3 AC [4]	A	31	31	31	31	31	31
Cooling water requirement (raw-water/deionized water)	l/min	148	148	148	148	148	148
Sound pressure level L_{pA}	dB(A)	74	74	74	74	74	74
Measuring surface level L_s	dB(A)	18	18	18	18	18	18
Cable cross-sections, line-side, max. connectable per phase [5]	mm^2 (DIN VDE)	2 × 240	2 × 240	2 × 240	2 × 240	2 × 240	2 × 240
	AWG/MCM (NEC, CEC)	2 × 500 MCM	2 × 500 MCM	2 × 500 MCM	2 × 500 MCM	2 × 500 MCM	2 × 500 MCM
Cable cross-sections, motor-side, max. connectable per phase [5]	mm^2 (DIN VDE)	2 × 240	2 × 240	2 × 240	2 × 240	2 × 240	2 × 240
	AWG/MCM (NEC, CEC)	2 × 500 MCM	2 × 500 MCM	2 × 500 MCM	2 × 500 MCM	2 × 500 MCM	2 × 500 MCM
PE connection, max. connection cross-section at enclosure with M12 screw [5]	mm^2 (DIN VDE)	2 × 240	2 × 240	2 × 240	2 × 240	2 × 240	2 × 240
	AWG/MCM (NEC, CEC)	2 × 500 MCM	2 × 500 MCM	2 × 500 MCM	2 × 500 MCM	2 × 500 MCM	2 × 500 MCM
Degree of protection		IP43	IP43	IP43	IP43	IP43	IP43
Dimensions (with cabinet doors and side panels)							
• Width	mm	4840	4840	4840	4840	4840	4840
• Height	mm	2280	2280	2280	2280	2280	2280
• Depth	mm	1275	1275	1275	1275	1275	1275
Circuit design (page 2/5)		⑤	⑤	⑤	⑤	⑤	⑤
Weight	kg	4200	4250	4250	4250	4300	4300

1) The figures for the rated input current and the power figures in hp and kW are approximate values which were determined for operation with induction motors and for a typical value of the cos phi power factor and efficiency of the motor. The hp figures are based on the NEC and CEC directives for the North American market. The kW values are quoted in steps which can be divided by 50.
Both approximate values need to be adapted to the motor which is actually used.

2) Approx. 5% of the power loss is dissipated into the atmosphere.

3) Without cooling system.

4) Plus 20 A precharging current for 25 s.

5) Figures refer to a subsystem; please refer to “Circuit designs” for the number of subsystems to be connected on the line and motor side.

Technical data (continued)

SINAMICS GM150 in IGBT version Water cooling, with sine-wave filter (option Y15)	Type	6SL3815-2LP35-5AA0	6SL3815-2LP36-1AA0	6SL3815-2LP36-7AA0	6SL3815-2LP37-4AA0	6SL3815-2LP38-0AA0
Output voltage 4.16 kV						
Type rating	kVA	3100	3450	3800	4100	4500
Shaft output [1]	kW	2600	2900	3200	3450	3800
	hp	3500	4000	4250	4500	5000
Rated output current	A	430	480	530	570	625
Input voltage	kV	2 × 2.2	2 × 2.2	2 × 2.2	2 × 2.2	2 × 2.2
Rated input current	A	2 × 388	2 × 427	2 × 475	2 × 514	2 × 562
Power loss [2] [3]	kW	53	58	61	66	72
Efficiency [3]	%	98.1	98.1	98.2	98.2	98.2
Max. current requirement of auxiliary supply 50/60 Hz 230 V AC	A	10	10	10	10	10
Max. current requirement of auxiliary supply 50/60 Hz 400 V 3 AC [4]	A	31	31	31	31	31
Cooling water requirement (raw-water/deionized water)	l/min	148	148	148	148	148
Sound pressure level L_{pA}	dB(A)	74	74	74	74	74
Measuring surface level L_s	dB(A)	18	18	18	18	18
Cable cross-sections, line-side, max. connectable per phase [5]	mm^2 (DIN VDE)	2 × 240	2 × 240	2 × 240	2 × 240	2 × 240
	AWG/MCM (NEC, CEC)	2 × 500 MCM	2 × 500 MCM	2 × 500 MCM	2 × 500 MCM	2 × 500 MCM
Cable cross-sections, motor-side, max. connectable per phase [5]	mm^2 (DIN VDE)	2 × 240	2 × 240	2 × 240	2 × 240	2 × 240
	AWG/MCM (NEC, CEC)	2 × 500 MCM	2 × 500 MCM	2 × 500 MCM	2 × 500 MCM	2 × 500 MCM
PE connection, max. connection cross-section at enclosure with M12 screw [5]	mm^2 (DIN VDE)	2 × 240	2 × 240	2 × 240	2 × 240	2 × 240
	AWG/MCM (NEC, CEC)	2 × 500 MCM	2 × 500 MCM	2 × 500 MCM	2 × 500 MCM	2 × 500 MCM
Degree of protection		IP43	IP43	IP43	IP43	IP43
Dimensions (with cabinet doors and side panels)						
• Width	mm	4840	4840	4840	4840	4840
• Height	mm	2280	2280	2280	2280	2280
• Depth	mm	1275	1275	1275	1275	1275
Circuit design (page 2/5)		⑤	⑤	⑤	⑤	⑤
Weight	kg	4350	4350	4850	4850	4850

1) The figures for the rated input current and the power figures in hp and kW are approximate values which were determined for operation with induction motors and for a typical value of the cos phi power factor and efficiency of the motor. The hp figures are based on the NEC and CEC directives for the North American market. The kW values are quoted in steps which can be divided by 50.
Both approximate values need to be adapted to the motor which is actually used.

2) Approx. 5% of the power loss is dissipated into the atmosphere.

3) Without cooling system.

4) Plus 20 A precharging current for 25 s.

5) Figures refer to a subsystem; please refer to “Circuit designs” for the number of subsystems to be connected on the line and motor side.

Technical data (continued)

SINAMICS GM150 in IGBT version Water cooling, with sine-wave filter (option Y15)	Type	6SL3815-2LP38-8AA0	6SL3815-2LP41-0AA0	6SL3815-2LP41-1AA0	6SL3815-2LP41-2AA0	6SL3815-2LP41-3AA0	6SL3815-2LP41-4AA0
Output voltage 4.16 kV							
Type rating	kVA	4950	5550	6150	6700	7350	7950
Shaft output [1]	kW	4200	4600	5100	5600	6200	6600
	hp	5500	6000	7000	7500	8000	9000
Rated output current	A	690	770	850	930	1020	1100
Input voltage	kV	2 × (2 × 2.2)	2 × (2 × 2.2)	2 × (2 × 2.2)	2 × (2 × 2.2)	2 × (2 × 2.2)	2 × (2 × 2.2)
Rated input current	A	2 × (2 × 311)	2 × (2 × 345)	2 × (2 × 383)	2 × (2 × 417)	2 × (2 × 456)	2 × (2 × 491)
Power loss [2] [3]	kW	80	89	99	107	117	126
Efficiency [3]	%	98.2	98.2	98.2	98.2	98.2	98.2
Max. current requirement of auxiliary supply 50/60 Hz 230 V AC	A	10	10	10	10	10	10
Max. current requirement of auxiliary supply 50/60 Hz 400 V 3 AC [4]	A	43	43	43	43	43	43
Cooling water requirement (raw-water/deionized water)	l/min	296	296	296	296	296	296
Sound pressure level L_{pA}	dB(A)	78	78	78	78	78	78
Measuring surface level L_s	dB(A)	19	19	19	19	19	19
Cable cross-sections, line-side, max. connectable per phase [5]	mm^2 (DIN VDE)	2 × 240	2 × 240	2 × 240	2 × 240	2 × 240	2 × 240
	AWG/MCM (NEC, CEC)	2 × 500 MCM	2 × 500 MCM	2 × 500 MCM	2 × 500 MCM	2 × 500 MCM	2 × 500 MCM
Cable cross-sections, motor-side, max. connectable per phase [5]	mm^2 (DIN VDE)	2 × 240	2 × 240	2 × 240	2 × 240	2 × 240	2 × 240
	AWG/MCM (NEC, CEC)	2 × 500 MCM	2 × 500 MCM	2 × 500 MCM	2 × 500 MCM	2 × 500 MCM	2 × 500 MCM
PE connection, max. connection cross-section at enclosure with M12 screw [5]	mm^2 (DIN VDE)	2 × 240	2 × 240	2 × 240	2 × 240	2 × 240	2 × 240
	AWG/MCM (NEC, CEC)	2 × 500 MCM	2 × 500 MCM	2 × 500 MCM	2 × 500 MCM	2 × 500 MCM	2 × 500 MCM
Degree of protection		IP43	IP43	IP43	IP43	IP43	IP43
Dimensions (with cabinet doors and side panels)							
• Width	mm	7860	7860	7860	7860	7860	7860
• Height	mm	2280	2280	2280	2280	2280	2280
• Depth	mm	1275	1275	1275	1275	1275	1275
Circuit design (page 2/5)		⑦	⑦	⑦	⑦	⑦	⑦
Weight	kg	7100	7100	7200	7200	8200	8200

1) The figures for the rated input current and the power figures in hp and kW are approximate values which were determined for operation with induction motors and for a typical value of the cos phi power factor and efficiency of the motor. The hp figures are based on the NEC and CEC directives for the North American market. The kW values are quoted in steps which can be divided by 50.
Both approximate values need to be adapted to the motor which is actually used.

2) Approx. 5% of the power loss is dissipated into the atmosphere.

3) Without cooling system.

4) Plus 20 A precharging current for 25 s.

5) Figures refer to a subsystem; please refer to “Circuit designs” for the number of subsystems to be connected on the line and motor side.

Technical data (continued)

SINAMICS GM150 in IGBT version Water cooling, with sine-wave filter (option Y15)	Type	6SL3815-2LQ31-7AA0	6SL3815-2LQ32-0AA0	6SL3815-2LQ32-3AA0	6SL3815-2LQ32-6AA0
Output voltage 6.0 kV					
Type rating	kVA	1400	1650	1900	2150
Shaft output [1]	kW	1200	1400	1600	1800
	hp	1500	1750	2000	2250
Rated output current	A	136	160	184	208
Input voltage	kV	2 × 2 × 1.55	2 × 2 × 1.55	2 × 2 × 1.55	2 × 2 × 1.55
Rated input current	A	2 × 2 × 121	2 × 2 × 144	2 × 2 × 166	2 × 2 × 187
Power loss [2] [3]	kW	27	30	35	39
Efficiency [3]	%	97.9	98.0	98.0	98.0
Max. current requirement of auxiliary supply 50/60 Hz 230 V AC	A	10	10	10	10
Max. current requirement of auxiliary supply 50/60 Hz 400 V 3 AC [4]	A	31	31	31	31
Cooling water requirement (raw-water/deionized water)	l/min	166	166	166	166
Sound pressure level L_{pA}	dB(A)	76	76	76	76
Measuring surface level L_s	dB(A)	19	19	19	19
Cable cross-sections, line-side, max. connectable per phase [5]	mm^2 (DIN VDE)	2 × 240	2 × 240	2 × 240	2 × 240
	AWG/MCM (NEC, CEC)	2 × 500 MCM	2 × 500 MCM	2 × 500 MCM	2 × 500 MCM
Cable cross-sections, motor-side, max. connectable per phase [5]	mm^2 (DIN VDE)	2 × 240	2 × 240	2 × 240	2 × 240
	AWG/MCM (NEC, CEC)	2 × 500 MCM	2 × 500 MCM	2 × 500 MCM	2 × 500 MCM
PE connection, max. connection cross-section at enclosure with M12 screw [5]	mm^2 (DIN VDE)	2 × 240	2 × 240	2 × 240	2 × 240
	AWG/MCM (NEC, CEC)	2 × 500 MCM	2 × 500 MCM	2 × 500 MCM	2 × 500 MCM
Degree of protection		IP43	IP43	IP43	IP43
Dimensions (with cabinet doors and side panels)					
• Width	mm	5440	5440	5440	5440
• Height	mm	2280	2280	2280	2280
• Depth	mm	1275	1275	1275	1275
Circuit design (page 2/5)		⑥	⑥	⑥	⑥
Weight	kg	5150	5200	5200	5400

1) The figures for the rated input current and the power figures in hp and kW are approximate values which were determined for operation with induction motors and for a typical value of the cos phi power factor and efficiency of the motor. The hp figures are based on the NEC and CEC directives for the North American market. The kW values are quoted in steps which can be divided by 50.
Both approximate values need to be adapted to the motor which is actually used.

2) Approx. 5% of the power loss is dissipated into the atmosphere.

3) Without cooling system.

4) Plus 20 A precharging current for 25 s.

5) Figures refer to a subsystem; please refer to “Circuit designs” for the number of subsystems to be connected on the line and motor side.

Technical data (continued)

SINAMICS GM150 in IGBT version Water cooling, with sine-wave filter (option Y15)	Type	6SL3815-2LQ33-0AA0	6SL3815-2LQ33-2AA0	6SL3815-2LQ33-6AA0	6SL3815-2LQ33-8AA0
Output voltage 6.0 kV					
Type rating	kVA	2400	2700	3000	3250
Shaft output [1]	kW	2000	2250	2500	2700
	hp	2500	2750	3000	3500
Rated output current	A	232	260	288	312
Input voltage	kV	2 × 2 × 1.55	2 × 2 × 1.55	2 × 2 × 1.55	2 × 2 × 1.55
Rated input current	A	2 × 2 × 207	2 × 2 × 235	2 × 2 × 255	2 × 2 × 283
Power loss [2] [3]	kW	41	46	50	56
Efficiency [3]	%	98.1	98.1	98.1	98.1
Max. current requirement of auxiliary supply 50/60 Hz 230 V AC	A	10	10	10	10
Max. current requirement of auxiliary supply 50/60 Hz 400 V 3 AC [4]	A	31	31	31	31
Cooling water requirement (raw-water/deionized water)	l/min	166	166	166	166
Sound pressure level L_{pA}	dB(A)	76	76	76	76
Measuring surface level L_s	dB(A)	19	19	19	19
Cable cross-sections, line-side, max. connectable per phase [5]	mm^2 (DIN VDE)	2 × 240	2 × 240	2 × 240	2 × 240
	AWG/MCM (NEC, CEC)	2 × 500 MCM	2 × 500 MCM	2 × 500 MCM	2 × 500 MCM
Cable cross-sections, motor-side, max. connectable per phase [5]	mm^2 (DIN VDE)	2 × 240	2 × 240	2 × 240	2 × 240
	AWG/MCM (NEC, CEC)	2 × 500 MCM	2 × 500 MCM	2 × 500 MCM	2 × 500 MCM
PE connection, max. connection cross-section at enclosure with M12 screw [5]	mm^2 (DIN VDE)	2 × 240	2 × 240	2 × 240	2 × 240
	AWG/MCM (NEC, CEC)	2 × 500 MCM	2 × 500 MCM	2 × 500 MCM	2 × 500 MCM
Degree of protection		IP43	IP43	IP43	IP43
Dimensions (with cabinet doors and side panels)					
• Width	mm	5440	5440	5440	5440
• Height	mm	2280	2280	2280	2280
• Depth	mm	1275	1275	1275	1275
Circuit design (page 2/5)		⑥	⑥	⑥	⑥
Weight	kg	5450	5450	5450	5450

1) The figures for the rated input current and the power figures in hp and kW are approximate values which were determined for operation with induction motors and for a typical value of the cos phi power factor and efficiency of the motor. The hp figures are based on the NEC and CEC directives for the North American market. The kW values are quoted in steps which can be divided by 50.
Both approximate values need to be adapted to the motor which is actually used.

2) Approx. 5% of the power loss is dissipated into the atmosphere.

3) Without cooling system.

4) Plus 20 A precharging current for 25 s.

5) Figures refer to a subsystem; please refer to “Circuit designs” for the number of subsystems to be connected on the line and motor side.

Technical data (continued)

SINAMICS GM150 in IGBT version Water cooling, with sine-wave filter (option Y15)	Type	6SL3815-2LQ34-3AA0	6SL3815-2LQ34-7AA0	6SL3815-2LQ35-3AA0	6SL3815-2LQ35-8AA0	6SL3815-2LQ36-4AA0	6SL3815-2LQ37-0AA0
Output voltage 6.0 kV							
Type rating	kVA	3600	3900	4400	4850	5300	5800
Shaft output [1]	kW	3000	3300	3700	4100	4400	4900
	hp	4000	4500	5000	5500	6000	6500
Rated output current	A	344	376	424	468	512	560
Input voltage	kV	2 × 2 × 1.55	2 × 2 × 1.55	2 × 2 × 1.55	2 × 2 × 1.55	2 × 2 × 1.55	2 × 2 × 1.55
Rated input current	A	2 × 2 × 311	2 × 2 × 338	2 × 2 × 379	2 × 2 × 421	2 × 2 × 462	2 × 2 × 503
Power loss [2] [3]	kW	61	63	70	78	86	93
Efficiency [3]	%	98.1	98.2	98.2	98.2	98.2	98.2
Max. current requirement of auxiliary supply 50/60 Hz 230 V AC	A	10	10	10	10	10	10
Max. current requirement of auxiliary supply 50/60 Hz 400 V 3 AC [4]	A	43	43	43	43	43	43
Cooling water requirement (raw-water/deionized water)	l/min	296	296	296	296	296	296
Sound pressure level L_{pA}	dB(A)	80	80	80	80	80	80
Measuring surface level L_s	dB(A)	19	19	19	19	19	19
Cable cross-sections, line-side, max. connectable per phase [5]	mm^2 (DIN VDE)	2 × 240	2 × 240	2 × 240	2 × 240	2 × 240	2 × 240
	AWG/MCM (NEC, CEC)	2 × 500 MCM	2 × 500 MCM	2 × 500 MCM	2 × 500 MCM	2 × 500 MCM	2 × 500 MCM
Cable cross-sections, motor-side, max. connectable per phase [5]	mm^2 (DIN VDE)	2 × 240	2 × 240	2 × 240	2 × 240	2 × 240	2 × 240
	AWG/MCM (NEC, CEC)	2 × 500 MCM	2 × 500 MCM	2 × 500 MCM	2 × 500 MCM	2 × 500 MCM	2 × 500 MCM
PE connection, max. connection cross-section at enclosure with M12 screw [5]	mm^2 (DIN VDE)	2 × 240	2 × 240	2 × 240	2 × 240	2 × 240	2 × 240
	AWG/MCM (NEC, CEC)	2 × 500 MCM	2 × 500 MCM	2 × 500 MCM	2 × 500 MCM	2 × 500 MCM	2 × 500 MCM
Degree of protection		IP43	IP43	IP43	IP43	IP43	IP43
Dimensions (with cabinet doors and side panels)							
• Width	mm	7860	7860	7860	7860	7860	7860
• Height	mm	2280	2280	2280	2280	2280	2280
• Depth	mm	1275	1275	1275	1275	1275	1275
Circuit design (page 2/5)		⑧	⑧	⑧	⑧	⑧	⑧
Weight	kg	8300	8400	8400	8500	8900	8900

1) The figures for the rated input current and the power figures in hp and kW are approximate values which were determined for operation with induction motors and for a typical value of the cos phi power factor and efficiency of the motor. The hp figures are based on the NEC and CEC directives for the North American market. The kW values are quoted in steps which can be divided by 50.
Both approximate values need to be adapted to the motor which is actually used.

2) Approx. 5% of the power loss is dissipated into the atmosphere.

3) Without cooling system.

4) Plus 20 A precharging current for 25 s.

5) Figures refer to a subsystem; please refer to “Circuit designs” for the number of subsystems to be connected on the line and motor side.

Technical data (continued)

SINAMICS GM150 in IGBT version Water cooling, with sine-wave filter (option Y15)	Type	6SL3815-2LR31-7AA0	6SL3815-2LR32-0AA0	6SL3815-2LR32-3AA0	6SL3815-2LR32-6AA0
Output voltage 6.6 kV					
Type rating	kVA	1550	1850	2100	2400
Shaft output [1]	kW	1300	1500	1750	2000
	hp	1750	2000	2250	2750
Rated output current	A	136	160	184	208
Input voltage	kV	2 × 2 × 1.7	2 × 2 × 1.7	2 × 2 × 1.7	2 × 2 × 1.7
Rated input current	A	2 × 2 × 117	2 × 2 × 143	2 × 2 × 163	2 × 2 × 188
Power loss [2] [3]	kW	29	33	37	41
Efficiency [3]	%	97.8	98.0	98.0	98.1
Max. current requirement of auxiliary supply 50/60 Hz 230 V AC	A	10	10	10	10
Max. current requirement of auxiliary supply 50/60 Hz 400 V 3 AC [4]	A	31	31	31	31
Cooling water requirement (raw-water/deionized water)	l/min	166	166	166	166
Sound pressure level L_{pA}	dB(A)	76	76	76	76
Measuring surface level L_s	dB(A)	19	19	19	19
Cable cross-sections, line-side, max. connectable per phase [5]	mm^2 (DIN VDE)	2 × 240	2 × 240	2 × 240	2 × 240
	AWG/MCM (NEC, CEC)	2 × 500 MCM	2 × 500 MCM	2 × 500 MCM	2 × 500 MCM
Cable cross-sections, motor-side, max. connectable per phase [5]	mm^2 (DIN VDE)	2 × 240	2 × 240	2 × 240	2 × 240
	AWG/MCM (NEC, CEC)	2 × 500 MCM	2 × 500 MCM	2 × 500 MCM	2 × 500 MCM
PE connection, max. connection cross-section at enclosure with M12 screw [5]	mm^2 (DIN VDE)	2 × 240	2 × 240	2 × 240	2 × 240
	AWG/MCM (NEC, CEC)	2 × 500 MCM	2 × 500 MCM	2 × 500 MCM	2 × 500 MCM
Degree of protection		IP43	IP43	IP43	IP43
Dimensions (with cabinet doors and side panels)					
• Width	mm	5440	5440	5440	5440
• Height	mm	2280	2280	2280	2280
• Depth	mm	1275	1275	1275	1275
Circuit design (page 2/5)		⑥	⑥	⑥	⑥
Weight	kg	5150	5200	5200	5400

1) The figures for the rated input current and the power figures in hp and kW are approximate values which were determined for operation with induction motors and for a typical value of the cos phi power factor and efficiency of the motor. The hp figures are based on the NEC and CEC directives for the North American market. The kW values are quoted in steps which can be divided by 50.
Both approximate values need to be adapted to the motor which is actually used.

2) Approx. 5% of the power loss is dissipated into the atmosphere.

3) Without cooling system.

4) Plus 20 A precharging current for 25 s.

5) Figures refer to a subsystem; please refer to “Circuit designs” for the number of subsystems to be connected on the line and motor side.

Technical data (continued)

SINAMICS GM150 in IGBT version Water cooling, with sine-wave filter (option Y15)	Type	6SL3815-2LR33-0AA0	6SL3815-2LR33-2AA0	6SL3815-2LR33-6AA0	6SL3815-2LR33-8AA0
Output voltage 6.6 kV					
Type rating	kVA	2650	2950	3300	3550
Shaft output [1]	kW	2200	2500	2750	3000
	hp	3000	3250	3500	4000
Rated output current	A	232	260	288	312
Input voltage	kV	2 × 2 × 1.7	2 × 2 × 1.7	2 × 2 × 1.7	2 × 2 × 1.7
Rated input current	A	2 × 2 × 207	2 × 2 × 232	2 × 2 × 257	2 × 2 × 282
Power loss [2] [3]	kW	45	50	56	61
Efficiency [3]	%	98.1	98.1	98.1	98.1
Max. current requirement of auxiliary supply 50/60 Hz 230 V AC	A	10	10	10	10
Max. current requirement of auxiliary supply 50/60 Hz 400 V 3 AC [4]	A	31	31	31	31
Cooling water requirement (raw-water/deionized water)	l/min	166	166	166	166
Sound pressure level L_{pA}	dB(A)	76	76	76	76
Measuring surface level L_s	dB(A)	19	19	19	19
Cable cross-sections, line-side, max. connectable per phase [5]	mm^2 (DIN VDE)	2 × 240	2 × 240	2 × 240	2 × 240
	AWG/MCM (NEC, CEC)	2 × 500 MCM	2 × 500 MCM	2 × 500 MCM	2 × 500 MCM
Cable cross-sections, motor-side, max. connectable per phase [5]	mm^2 (DIN VDE)	2 × 240	2 × 240	2 × 240	2 × 240
	AWG/MCM (NEC, CEC)	2 × 500 MCM	2 × 500 MCM	2 × 500 MCM	2 × 500 MCM
PE connection, max. connection cross-section at enclosure with M12 screw [5]	mm^2 (DIN VDE)	2 × 240	2 × 240	2 × 240	2 × 240
	AWG/MCM (NEC, CEC)	2 × 500 MCM	2 × 500 MCM	2 × 500 MCM	2 × 500 MCM
Degree of protection		IP43	IP43	IP43	IP43
Dimensions (with cabinet doors and side panels)					
• Width	mm	5440	5440	5440	5440
• Height	mm	2280	2280	2280	2280
• Depth	mm	1275	1275	1275	1275
Circuit design (page 2/5)		⑥	⑥	⑥	⑥
Weight	kg	5400	5450	5450	5450

1) The figures for the rated input current and the power figures in hp and kW are approximate values which were determined for operation with induction motors and for a typical value of the cos phi power factor and efficiency of the motor. The hp figures are based on the NEC and CEC directives for the North American market. The kW values are quoted in steps which can be divided by 50.
Both approximate values need to be adapted to the motor which is actually used.

2) Approx. 5% of the power loss is dissipated into the atmosphere.

3) Without cooling system.

4) Plus 20 A precharging current for 25 s.

5) Figures refer to a subsystem; please refer to “Circuit designs” for the number of subsystems to be connected on the line and motor side.

Technical data (continued)

SINAMICS GM150 in IGBT version Water cooling, with sine-wave filter (option Y15)	Type	6SL3815-2LR34-3AA0	6SL3815-2LR34-7AA0	6SL3815-2LR35-3AA0	6SL3815-2LR35-8AA0	6SL3815-2LR36-4AA0	6SL3815-2LR37-0AA0
Output voltage 6.6 kV							
Type rating	kVA	3950	4300	4850	5350	5850	6400
Shaft output [1]	kW	3300	3600	4000	4500	4900	5400
	hp	4500	4750	5000	6000	6500	7000
Rated output current	A	344	376	424	468	512	560
Input voltage	kV	2 × 2 × 1.7	2 × 2 × 1.7	2 × 2 × 1.7	2 × 2 × 1.7	2 × 2 × 1.7	2 × 2 × 1.7
Rated input current	A	2 × 2 × 307	2 × 2 × 339	2 × 2 × 382	2 × 2 × 420	2 × 2 × 458	2 × 2 × 502
Power loss [2] [3]	kW	63	69	78	86	93	102
Efficiency [3]	%	98.2	98.2	98.2	98.2	98.2	98.2
Max. current requirement of auxiliary supply 50/60 Hz 230 V AC	A	10	10	10	10	10	10
Max. current requirement of auxiliary supply 50/60 Hz 400 V 3 AC [4]	A	43	43	43	43	43	43
Cooling water requirement (raw-water/deionized water)	l/min	296	296	296	296	296	296
Sound pressure level L_{pA}	dB(A)	80	80	80	80	80	80
Measuring surface level L_s	dB(A)	19	19	19	19	19	19
Cable cross-sections, line-side, max. connectable per phase [5]	mm^2 (DIN VDE)	2 × 240	2 × 240	2 × 240	2 × 240	2 × 240	2 × 240
	AWG/MCM (NEC, CEC)	2 × 500 MCM	2 × 500 MCM	2 × 500 MCM	2 × 500 MCM	2 × 500 MCM	2 × 500 MCM
Cable cross-sections, motor-side, max. connectable per phase [5]	mm^2 (DIN VDE)	2 × 240	2 × 240	2 × 240	2 × 240	2 × 240	2 × 240
	AWG/MCM (NEC, CEC)	2 × 500 MCM	2 × 500 MCM	2 × 500 MCM	2 × 500 MCM	2 × 500 MCM	2 × 500 MCM
PE connection, max. connection cross-section at enclosure with M12 screw [5]	mm^2 (DIN VDE)	2 × 240	2 × 240	2 × 240	2 × 240	2 × 240	2 × 240
	AWG/MCM (NEC, CEC)	2 × 500 MCM	2 × 500 MCM	2 × 500 MCM	2 × 500 MCM	2 × 500 MCM	2 × 500 MCM
Degree of protection		IP43	IP43	IP43	IP43	IP43	IP43
Dimensions (with cabinet doors and side panels)							
• Width	mm	7860	7860	7860	7860	7860	7860
• Height	mm	2280	2280	2280	2280	2280	2280
• Depth	mm	1275	1275	1275	1275	1275	1275
Circuit design (page 2/5)		⑧	⑧	⑧	⑧	⑧	⑧
Weight	kg	8400	8400	8800	8900	8900	8900

1) The figures for the rated input current and the power figures in hp and kW are approximate values which were determined for operation with induction motors and for a typical value of the cos phi power factor and efficiency of the motor. The hp figures are based on the NEC and CEC directives for the North American market. The kW values are quoted in steps which can be divided by 50.
Both approximate values need to be adapted to the motor which is actually used.

2) Approx. 5% of the power loss is dissipated into the atmosphere.

3) Without cooling system.

4) Plus 20 A precharging current for 25 s.

5) Figures refer to a subsystem; please refer to “Circuit designs” for the number of subsystems to be connected on the line and motor side.

SINAMICS GM150
IGCT version

3

3/2	**Overview**
3/2	**Benefits**
3/2	**Design**
3/6	**Function**
3/8	**Selection and ordering data**
3/8	**Options**
	Technical data
3/14	General technical data
3/15	Control properties
3/15	Ambient conditions
3/16	Installation conditions and derating data
3/18	Converter-related technical data

IGCT version

Overview

SINAMICS GM150 in IGCT version

The water-cooled SINAMICS GM150 converters in IGCT version with IGCT Motor Modules are an addition to the SINAMICS GM150 converters as IGBT version in the upper power range up to 28 MVA.

SINAMICS GM150 converters in IGCT version are optimally matched to Siemens motors.

SINAMICS GM150 converters in IGCT version offer economic drive solutions that can be matched to customers' specific requirements by chosing from the wide range of available components and options.

IGCT converters are available for the following voltage and power ranges:

Rated output voltage	Type rating
3.3 kV	10 MVA to 28 MVA

Global use

SINAMICS GM150 converters in IGCT version are manufactured to international standards and regulations, making them ideally suited for global use. These converters are also available in a marine version (meeting the requirements of all major classification organizations).

Benefits

- Compact design and high flexibility in configuration ensures easy plant integration
- Easy operation and monitoring on the convenient operator panel
- Easy and reliable operation through integrated maintenance functions: the converter signals early and automatically if maintenance is required or components need to be exchanged
- High robustness and reliability due to the use of IGCT power semiconductors in the high power range and fuseless design combined with intelligent reaction to external disturbances
- Can be easily integrated into automation solutions due to PROFIBUS interface supplied as standard and various analog and digital interfaces
- High level of service-friendliness through innovative power section design with compact phase modules and easy access to all components

Design

SINAMICS GM150 converters in IGCT version are available in the basic circuit with a 12-pulse or 24-pulse Basic Line Module (option).

For higher output ratings, two or three complete converter units with isolated DC links are operated in parallel.

Phase modules in which IGCTs, diodes etc. are grouped together in one pressure stack are used in the Motor Modules.

The converter consists of cabinet units for the Basic Line Module and for the Motor Module. One of three phase modules and the control section in the Motor Module cabinet are highlighted in the illustration.

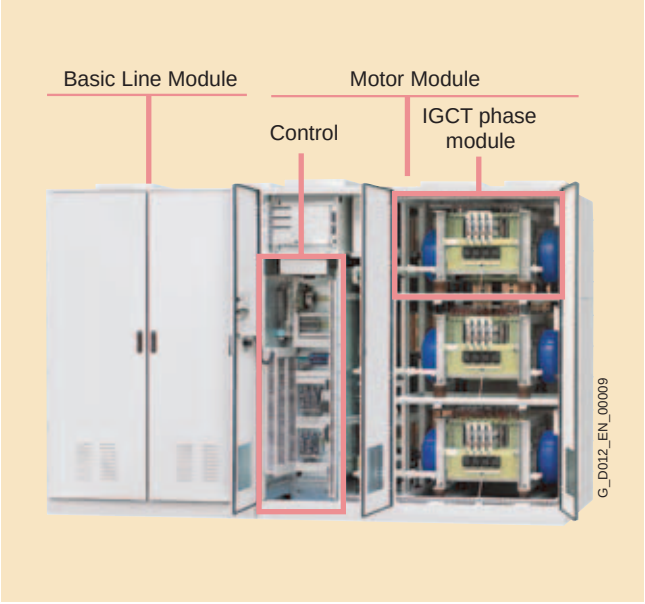

SINAMICS GM150 in IGCT version, internal arrangement (without cooling unit)

Design (continued)

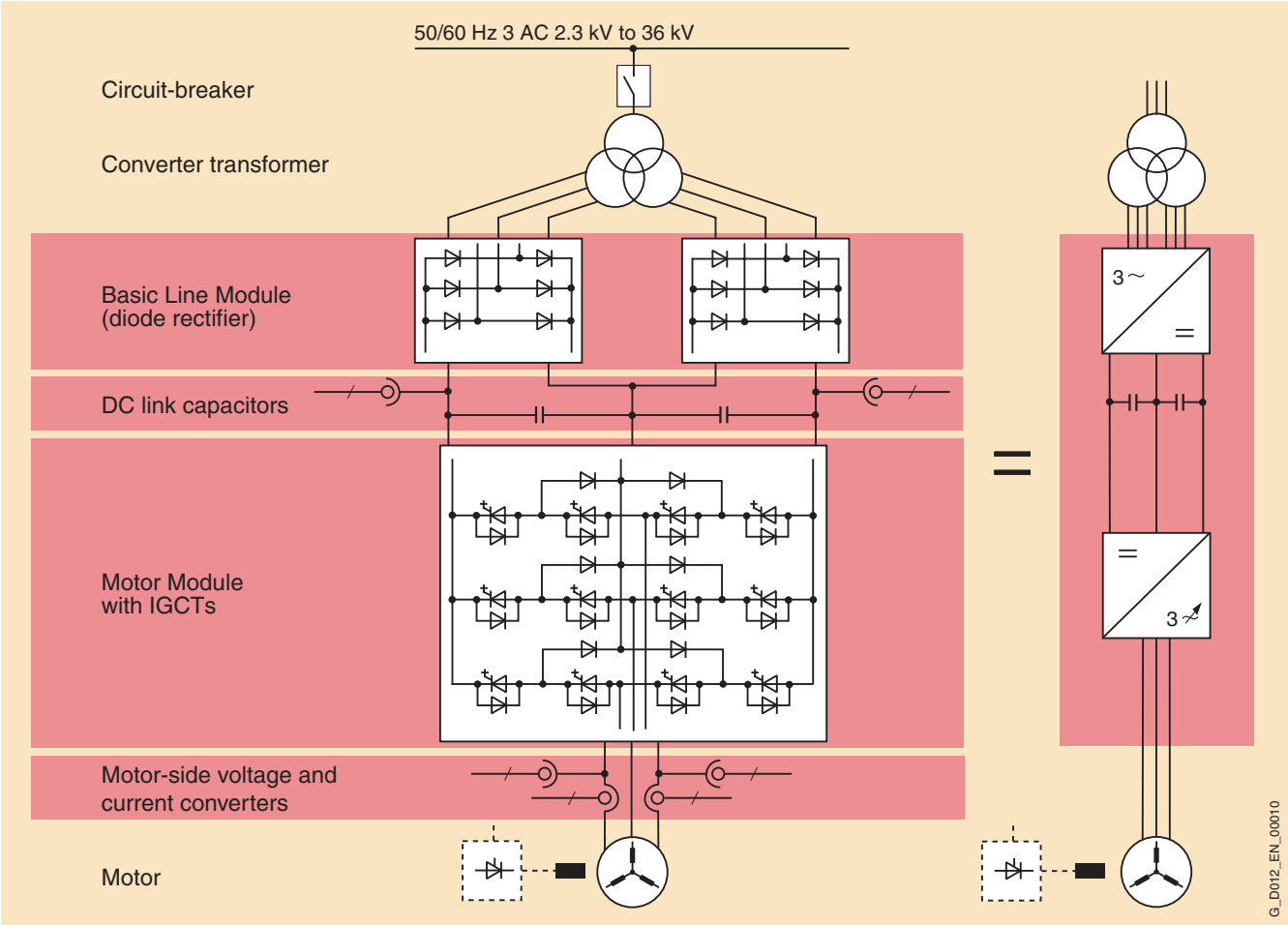

Block diagram

3

Design (continued)

The following circuit designs are available for SINAMICS GM150 in IGCT version.

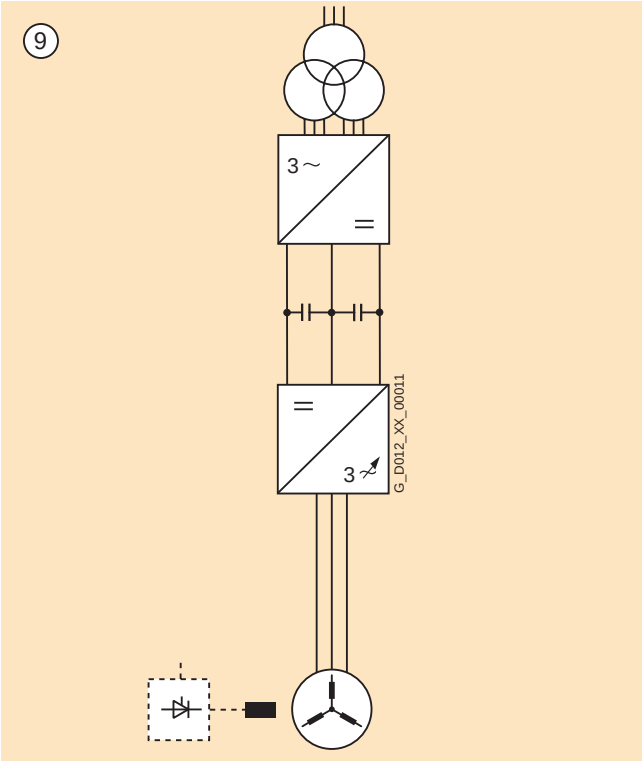

Basic circuit
12-pulse infeed

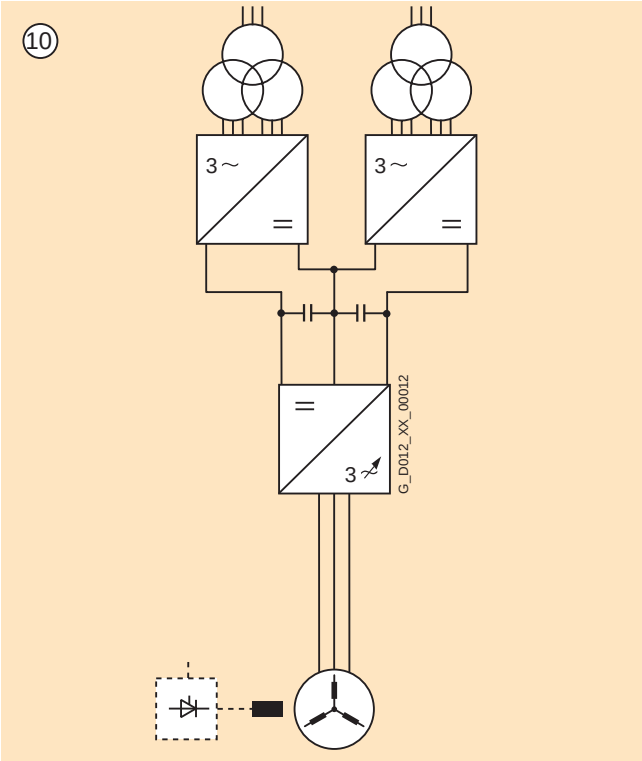

24-pulse infeed through series connection of two Basic Line Modules:
option **N15**

Design (continued)

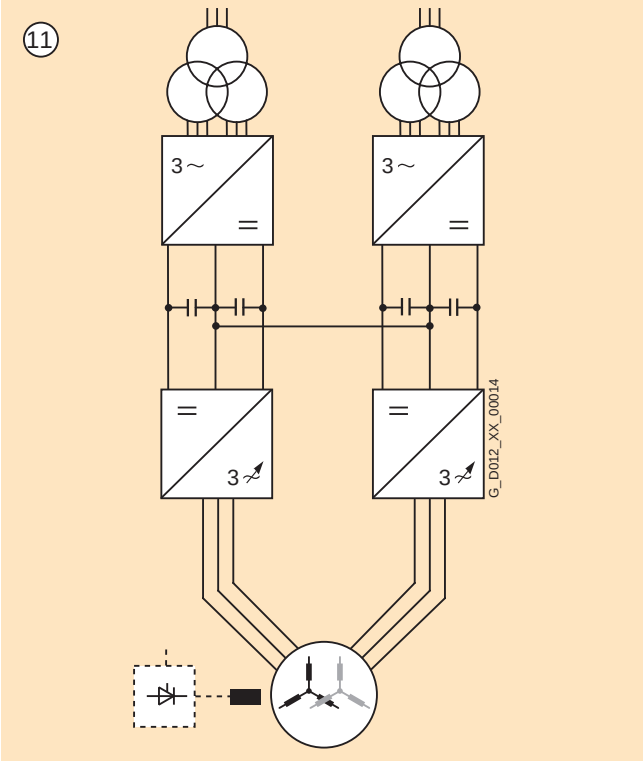

Power increased by parallel operation of two converter units [1)]
24-pulse infeed possible

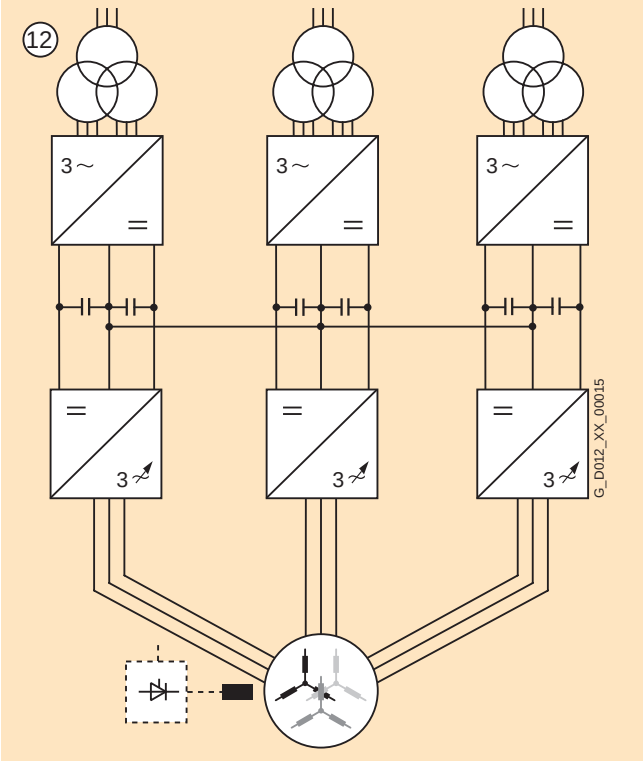

Power increased by parallel operation of three converter units [1)]
36-pulse infeed possible

1) Requires a motor with isolated winding systems.

3

Function

Characteristic features

SINAMICS GM150 in IGCT version	
Line Module (line-side rectifier)	
• Basic Line Module, 12-pulse (two-quadrant operation)	Standard
• Basic Line Module, 24-pulse (two-quadrant operation)	Option
Motor Module (motor-side inverter)	
Voltage range	3.3 kV
Power range (typ.)	10 MVA to 28 MVA
Cooling method	
• Water cooling	Standard
Control modes	
• Induction motor	Standard
• Synchronous motor, separately excited	Option
• Synchronous motor, permanently excited	Option

Software and protection functions

SINAMICS GM150 in IGCT version	Description
Closed-loop control	The motor-side closed-loop control is realized as a field-oriented closed-loop vector control which can be operated as a speed or torque control as required. The closed-loop vector control achieves the dynamics of a DC drive. This is made possible by the fact that the current components forming the torque and flux can be controlled precisely and independently of each other. Prescribed torques can thus be observed and limited accurately. In the speed range from 1:10, the field-oriented closed-loop control does not require an actual speed value encoder. An actual speed value encoder is required in the following cases: • High dynamics requirements • Torque control/constant torque drives with setting range > 1:10 • Very low speeds • Very high speed accuracy
Setpoint input	The setpoint can be defined internally or externally; internally as a fixed, motorized potentiometer or jog setpoint, externally via the PROFIBUS interface or an analog input of the customer's terminal block. The internal fixed setpoint and the motorized potentiometer setpoint can be switched over or adjusted using control commands via all interfaces.
Ramp-function generator	A user-friendly ramp-function generator with separately adjustable ramp-up and ramp-down times, together with adjustable rounding times in the lower and upper speed ranges, improves the control response and therefore prevents mechanical overloading of the drive train. The ramp-down ramps can be parameterized separately for emergency stop.
$V_{dc\ max}$ controller	The $V_{dc\ max}$ controller automatically prevents overvoltages in the DC link if the set ramp-down ramp is too short, for example. This can also extend the set ramp-down time.
Kinetic buffering (KIP)	Line voltage failures are bridged to the extent permitted by the kinetic energy of the drive train. The speed drops depending on the moment of inertia and the load torque. The current speed setpoint is resumed when the line voltage returns.
Automatic restart (option)	The automatic restart switches the drive on again when the power is restored after a power failure or a general fault, and ramps up to the current speed setpoint.
Flying restart	The flying restart function permits bumpless connection of the converter to a rotating motor.
Diagnostics functions	• Self-diagnostics of control hardware • Non-volatile memory for reliable diagnostics when the power supply fails • Monitoring of HV-IGBTs with individual messages for each slot • User-friendly on-site operator panel with plain text messages
Operating hours and switching cycle counter	The operating hours of the fans are detected and logged so that preventive maintenance or replacements can be performed. The switching cycles of the circuit-breaker are detected and added up, to form the basis of preventive maintenance work.
Detection of actual motor speed (option)	The SMC30 Sensor Module Cabinet-Mounted can be used to detect the actual motor speed. The signals from the rotary pulse encoder are converted here and made available for evaluation via the DRIVE-CLiQ interface of the controller.
Operator protection	The cabinet doors of the power sections are fitted with electromagnetic locks. This prevents the cabinet doors from being opened while hazardous voltages are present inside the cabinet.

Function (continued)

Software and protection functions

SINAMICS GM150 in IGCT version	Description
EMERGENCY STOP button	The converters are equipped as standard with an EMERGENCY STOP button with protective collar which is fitted in the cabinet door. The contacts of the pushbutton are connected in parallel to the terminal block so they can be integrated in a protection concept on the plant side. EMERGENCY STOP category 0 is set as standard for an uncontrolled shutdown (DIN EN 60204-1/VDE 0113-1 (IEC 60204-1)). The function includes voltage disconnection of the converter output through the circuit-breaker. Consequently the motor coasts down. EMERGENCY STOP category 1 is optionally available for a controlled shutdown.
Insulation monitoring	The converters feature insulation monitoring of the whole galvanic network from the secondary side of the transformer to the stator windings of the motor.
I/O monitoring	An extensive package of options for I/O monitoring (from the transformer and the motor through to the auxiliaries) is available. In addition it is possible to monitor the temperature with thermocouples or PT100 resistors.
Thermal overload protection	A warning message is issued first when the overtemperature threshold responds. If the temperature rises further, either a shutdown is carried out or automatic influencing of the output current so that a reduction in the thermal load is achieved. Following elimination of the cause of the fault (e.g. improvement of the ventilation), the original operating values are automatically resumed. In the case of water-cooled converters, the water temperature and flow rate are detected at several points in the cooling circuit and evaluated. An extensive self-diagnostics protects the converter and reports faults.
Grounding switch (option)	If grounding on the line or motor side is required for safety and protection reasons, a motor-operated grounding switch can be ordered. For safety reasons, the converter controller locks these grounding switches against activation while voltage is still present. The control is integrated into the protection and monitoring chain of the converter. The grounding switches are inserted automatically when the standard grounding switches of the DC link are inserted.

AOP30 operator panel

The AOP30 operator panel is fitted into the cabinet door of the SINAMICS GM150 for operation, monitoring and commissioning.

It has the following features and characteristics:

- graphical LCD display with backlighting for plain-text display and a bar display of process variables
- LEDs for displaying the operational status
- help function describing causes of and remedies for faults and alarms
- keypad for operational control of a drive
- local/remote switchover for selecting the input point (priority assigned to operator panel or customer's terminal block/ PROFIBUS)
- numeric keypad for input of setpoint or parameter values
- function keys for prompted navigation in the menu
- two-stage safety strategy to protect against accidental or unauthorized changes to settings. Operation of the drive from the operator panel can be disabled by a password, ensuring that only parameter values and process variables can be displayed in the panel. A password can be used to prevent the unauthorized modification of converter parameters.

The operator panel languages - English, German, Spanish and Chinese - are stored on the CompactFlash card of the Control Unit.

3

Selection and ordering data

Type rating	Shaft output		Rated output current	SINAMICS GM150 in IGCT version	Circuit designs (pages 3/4 and 3/5)
kVA	kW	hp	A	Order No.	Fig. No.
Output voltage 3.3 kV					
10000	9000	12000	1750	**6SL3835-2LN41-8AA0**	⑨
16000	13000	18000	2 × 1400	**6SL3835-2LN42-8AA0**	⑪
19000	17000	23000	2 × 1660	**6SL3835-2LN43-6AA0**	⑪
24000	20000	27000	3 × 1400	**6SL3835-2LN44-2AA0**	⑫
28000	25000	33000	3 × 1630	**6SL3835-2LN45-4AA0**	⑫

Options

When ordering a converter with options, add **"-Z"** to the order number of the converter, followed by the order code(s) for the desired option(s).

Example:

6SL3835-2LN41-8AA0-Z
+N15+L60+...

In the following tables, related options are arranged in groups. Whether the options can be combined or are mutually exclusive is indicated within these groups. A detailed description of the options can be found in the chapter Description of options.

Input-side options		**N15**	**N13**
24-pulse Basic Line Module	**N15**		–
Circuit-breaker at converter input (on request)	**N13**	–	

Output-side options	
Output reactor	**L08**

Protection functions		**L48**	**L49**	**L51**	**L60**	**M10**
Grounding switch at converter input (motor-operated)	**L48**		✓	✓	✓	✓
Grounding switch at converter output (motor-operated)	**L49**	✓		✓	✓	✓
Disconnector at converter output	**L51**	✓	✓		✓	✓
EMERGENCY STOP category 1	**L60**	✓	✓	✓		✓
Safety closing/interlocking system	**M10**	✓	✓	✓	✓	

✓	Options can be combined
–	Options are mutually exclusive

Options (continued)

Temperature detection and evaluation (standard: 3 PT100 inputs)		L80	L81	L82	L90	L91	L92	L93	L94	L95	L96
2 thermistor protection relays for alarm and fault [1]	**L80**		–	–	✓	✓	✓	✓	✓	✓	✓
2 x 2 thermistor protection relays for alarm and fault [1]	**L81**	–		–	✓	✓	✓	✓	✓	✓	✓
3 x 2 thermistor protection relays for alarm and fault [1]	**L82**	–	–		✓	✓	✓	✓	✓	✓	✓
PT100 evaluation unit with 3 inputs [1]	**L90**	✓	✓	✓		–	–	–	–	–	–
2 PT100 evaluation units with 3 inputs each [1]	**L91**	✓	✓	✓	–		–	–	–	–	–
3 PT100 evaluation units with 3 inputs each [1]	**L92**	✓	✓	✓	–	–		–	–	–	–
PT100 evaluation unit with 6 inputs, 2 analog outputs (outputs for display connected to control) [1]	**L93**	✓	✓	✓	–	–	–		–	–	–
2 PT100 evaluation units each with 6 inputs and 2 analog outputs (outputs for display connected to control) [2]	**L94**	✓	✓	✓	–	–	–	–		–	–
PT100 evaluation unit with 6 inputs for explosion-proof motors, 2 analog outputs (outputs for display connected to control) [1]	**L95**	✓	✓	✓	–	–	–	–	–		–
2 PT100 evaluation units each with 6 inputs for explosion-proof motors and 2 analog outputs (outputs for display connected to control) [2]	**L96**	✓	✓	✓	–	–	–	–	–	–	

1) Options **L..** cannot be combined with option **G61** (additional TM31 Terminal Module).

2) Options **L94** and **L96** cannot be combined with option **G61** and **G62** (additional TM31 Terminal Modules) and with option **E86** (additional analog inputs).

Control of auxiliaries		N30	N31	N32	N33	N35	N36	N37	N38
The contractor is switched on with the ON command at the converter and switched off with the OFF command (example: external fan on the motor). The supply voltage for the auxiliary to be powered must be provided externally.									
Controlled outgoing feeder for auxiliaries 400 V 3 AC, max. 4 kW	**N30**		–	–	–	✓	✓	✓	✓
Controlled outgoing feeder for auxiliaries 400 V 3 AC, max. 7 kW	**N31**	–		–	–	✓	✓	✓	✓
Controlled outgoing feeder for auxiliaries 400 V 3 AC, max. 11 kW	**N32**	–	–		–	✓	✓	✓	✓
Controlled outgoing feeder for auxiliaries 400 V 3 AC, max. 15 kW	**N33**	–	–	–		✓	✓	✓	✓
The contractor is switched off with the ON command at the converter and switched on with the OFF command (example: heater). The supply voltage for the auxiliary to be powered must be provided externally.									
Controlled outgoing feeder for auxiliaries 230 V 1 AC, max. 1 kW	**N35**	✓	✓	✓	✓		–	–	–
Controlled outgoing feeder for auxiliaries 230 V 1 AC, max. 2 kW	**N36**	✓	✓	✓	✓	–		–	–
Controlled outgoing feeder for auxiliaries 230 V 1 AC, max. 3 kW	**N37**	✓	✓	✓	✓	–	–		–
Controlled outgoing feeder for auxiliaries 230 V 1 AC, max. 4 kW	**N38**	✓	✓	✓	✓	–	–	–	

✓	Options can be combined
–	Options are mutually exclusive

3

Options (continued)

Connection of signal cables (standard: connection of signal cables directly to the terminals of the Terminal Modules)		M32	M33
Customer's terminal block with cage clamp terminals for signal cables up to 2.5 mm^2	M32		–
Customer's terminal block with screw terminals for signal cables up to 2.5 mm^2	M33	–	

Control and display instruments in the door of the control cabinet		K20	K21	K22
Signal lamps and start/stop button in the cabinet door	K20		–	–
Display instruments in the cabinet door for voltage, current, speed and power also including signal lamps and start/stop button	K21	–		–
Display instruments in the cabinet door for current, speed, power and winding temperature also including signal lamps and start/stop button	K22	–	–	

Interface modules for connection to external bus systems (standard: PROFIBUS (slave))		G20	G21	G22	G23	G24	G25
CAN bus interface (CANopen, on request)	G20		–	–	–	–	–
Modbus Plus interface	G21	–		–	–	–	–
Modbus RTU slave interface	G22	–	–		–	–	–
DeviceNet interface	G23	–	–	–		–	–
PROFINET interface (on request)	G24	–	–	–	–		–
Teleservice connection (on request)	G25	–	–	–	–	–	

Interface modules for additional customer connections and speed encoders		G61	G62	G63	K50
Additional TM31 Terminal Module [1]	G61		✓	✓	✓
Second additional TM31 Terminal Module [1]	G62	✓		✓	✓
Additional TM15 Terminal Module	G63	✓	✓		✓
SMC30 Sensor Module Cabinet-Mounted	K50	✓	✓	✓	

1) For exclusions of options **G61** and **G62**, see Description of options.

✓	Options can be combined
–	Options are mutually exclusive

Options (continued)

Additional analog inputs/outputs (isolated)		E86	E87
Additional analog inputs (isolated) [1]	E86		✓
Additional analog outputs (isolated) [2]	E87	✓	

1) Option **E86** cannot be combined with option **G62** (second additional TM31 Terminal Module) and with options **L94** and **L96** (2 PT100 evaluation units).
2) Option **E87** cannot be combined with option **G62** (second additional TM31 Terminal Module).

Diagnostics module	
PADU8 diagnostics module (8 analog and 8 digital signals)	G66

Industry-specific options		B00	M66
NAMUR terminal block	B00		✓
Marine version with type certificate	M66	✓	

Individual certification of the converters for use on ships (on request, contains option M66)		E11	E21	E31	E51	E61	E71
Marine version with individual certificate from Germanische Lloyd (GL)	E11		–	–	–	–	–
Marine version with individual certificate from Lloyds Register (LR)	E21	–		–	–	–	–
Marine version with individual certificate from Bureau Veritas (BV), requires option **Y75** (other auxiliary voltage supply)	E31	–	–		–	–	–
Marine version with individual certificate from Det Norske Veritas (DNV)	E51	–	–	–		–	–
Marine version with individual certificate from the American Bureau of Shipping (ABS)	E61	–	–	–	–		–
Marine version with individual certificate from the Chinese Classification Society (CCS)	E71	–	–	–	–	–	

Functional options		E01	E02	E03	L32
Control for separately excited synchronous motors with slip-ring excitation	E01		–	–	✓
Control for separately excited synchronous motors with brushless reverse field excitation	E02	–		–	✓
Control for permanently excited synchronous motors	E03	–	–		✓
Automatic restart	L32	✓	✓	✓	

✓	Options can be combined
–	Options are mutually exclusive

3

Options (continued)

Documentation (standard: PDF format in English on CD-ROM)		D00	D02	D15	D56	D72	D77	D78	D84	D92	Y10
Documentation in German	D00		✓	✓	–	–	–	–	–	–	✓
Circuit diagrams, terminal diagrams and dimension drawings in DXF format [1]	D02	✓		✓	✓	✓	✓	✓	✓	✓	✓
One set of printed documentation (multiple orders possible)	D15	✓	✓		✓	✓	✓	✓	✓	✓	✓
Documentation in Russian (on request)	D56	–	✓	✓		–	–	–	–	–	✓
Documentation in Italian (on request)	D72	–	✓	✓	–		–	–	–	–	✓
Documentation in French (on request)	D77	–	✓	✓	–	–		–	–	–	✓
Documentation in Spanish	D78	–	✓	✓	–	–	–		–	–	✓
Documentation in Chinese	D84	–	✓	✓	–	–	–	–		–	✓
Documentation in Japanese (on request)	D92	–	✓	✓	–	–	–	–	–		✓
Circuit diagrams with customer-specific description field (plain text required) [1]	Y10	✓	✓	✓	✓	✓	✓	✓	✓	✓	

1) The equipment-specific documents (circuit diagrams etc.) are available only in English/German.

Rating plate language (standard: English/German)		T58	T60	T80	T85	T90	T91
Rating plate in English/French	T58		–	–	–	–	–
Rating plate in English/Spanish	T60	–		–	–	–	–
Rating plate in English/Italian	T80	–	–		–	–	–
Rating plate in English/Russian (on request)	T85	–	–	–		–	–
Rating plate in English/Japanese (on request)	T90	–	–	–	–		–
Rating plate in English/Chinese (on request)	T91	–	–	–	–	–	

Auxiliary voltage supply	
Auxiliary voltage other than 400 V 3 AC (primary voltage and frequency must be indicated in plain text)	Y75

✓	Options can be combined
–	Options are mutually exclusive

Options (continued)

Converter acceptance tests in presence of customer		F03	F73	F77	F97
Visual acceptance of converter	F03		–	–	–
Functional acceptance of converter with inductive load	F73	–		✓	–
Acceptance of insulation test of the converter [1]	F77	–	✓		–
Customer-specific converter acceptance tests (on request)	F97	–	–	–	

1) Option **F77** can only be ordered in connection with option **F73**.

Cooling unit (standard: cooling unit with one stainless steel plate-type heat exchanger)		W02	W11	W12	W14	W20	Y40
Cooling unit with redundant stainless steel plate-type heat exchangers	W02		–	–	–	✓	–
Cooling unit with one titanium plate-type heat exchanger	W11	–		–	–	✓	–
Cooling unit with redundant titanium plate-type heat exchangers	W12	–	–		–	✓	–
Converter without cooling unit (plant scope)	W14	–	–	–		–	–
Raw-water connection from bottom	W20	✓	✓	✓	–		✓
Raw-water data deviates from technical data (on request) [1]	Y40	–	–	–	–	✓	

1) Option **Y40** includes a cooling system which is adapted to the raw-water data according to the customer's specifications.

Other options		L50	L53	L55	Y09
Cabinet lighting and service socket outlet in control section	L50		✓	✓	✓
UPS for power supply of control	L53	✓		✓	✓
Anti-condensation heating for cabinet	L55	✓	✓		✓
Special paint finish according to RAL .... (in a color other than RAL 7035; plain text required)	Y09	✓	✓	✓	

✓	Options can be combined
–	Options are mutually exclusive

IGCT version

Technical data

General technical data	
Power components	Diodes/IGCTs
Line-side converter	
• Standard	12-pulse diode rectifier (Basic Line Module)
• Option	24-pulse diode rectifier (Basic Line Module)
Motor-side converter	Inverter (Motor Module)
Closed-loop control	Closed-loop vector control
Drive quadrants	2 (driving 2 directions of rotation)
Isolation of power section/ controller and closed-loop control	Optical conductor, isolating transformer
Auxiliary current supply (for fans, coolant pumps, precharging the DC link capacitors, controller and closed-loop control)	• 230 V 1 AC ±10%, 50/60 Hz ±3% and • 400 V 3 AC ±10%, 50/60 Hz ±3% or another auxiliary voltage (option **Y75**)
Installation altitude	≤ 1000 m above sea level: no derating > 1000 m to 4000 m above sea level: current derating required > 2000 m to 4000 m above sea level: additionally voltage derating required
Insulation	In accordance with DIN EN 50178/VDE 0160 (IEC 62103): pollution degree 2 (without conductive pollution), condensation not permitted
Degree of protection	In accordance with EN 60529/VDE 0470 T1 (IEC 60529): IP43
Protection class	In accordance with DIN EN 61140/VDE 0140 T1 (IEC 61140): 1
Shock protection	BGV A 3
Interference transmission	In accordance with DIN EN 61800-3/VDE 0160 T100 (IEC 61800-3): no RI suppression
Paint finish/color	Indoor requirements/RAL 7035, light gray
Compliance with standards	
• Standards	- EN 61800-3/VDE 0160 T100 (IEC 61800-3) - EN 61800-4/VDE 0160 T104 (IEC 61800-4) - EN 60146-1-1/VDE 0558 T11 (IEC 60146-1-1) - EN 50178/VDE 0160 T100 (IEC 62103) - EN 60204-11/VDE 0113 T11 (IEC 60204-11)
• EU directives	- 98/37/EC + amendments (machinery directive) - 89/336/EEC + amendments (electromagnetic compatibility)
Water cooling	Water-water cooling unit, internal circuit, deionized water
Permitted coolant temperature (raw-water)	
• Inlet	+5 °C to +35 °C
• Outlet	max. +40 °C

Rated data	
Output voltage	**3.3 kV**
Input voltage	2 x 1.7 kV
Tolerance of input voltage	±10%
Line frequency	50/60 Hz ±3%
Line factor fundamental mode	> 0.96

Technical data (continued)

	Operation of induction motors		Operation of separately excited synchronous motors
	without speed encoder	with speed encoder	with speed encoder
Control properties			
Operating range			
• Lower limit of speed control range (% of rated motor speed)	5%	0%	0%
• Max. permissible output frequency	250 Hz	250 Hz	90 Hz
• Field weakening range	1:3	1:3	1:4
Stationary operation			
• Speed accuracy (% of rated motor speed)	±0.2% (from 5% rated speed)	±0.01%	±0.01%
• Torque accuracy (% of rated torque)	±5% (from 5% rated speed)	±5%	±2%
Dynamic operation			
• Torque rise time	5 ms	5 ms	5 ms

	Storage	Transport	Operation
Climatic ambient conditions			
Ambient temperature	–25 °C to +70 °C	–25 °C to +70 °C	+5 °C to +40 °C
Relative air humidity	5% to 95% (only slight condensation permitted; converter must be completely dry before commissioning)	5% to 75%	5% to 85% (condensation not permitted)
Other climatic conditions in accordance with class	1K3 in acc. with EN 60721-3-1 (IEC 60721-3-1) (formation of ice not permitted)	2K2 in acc. with EN 60721-3-2 (IEC 60721-3-2)	3K3 in acc. with EN 60721-3-3 (IEC 60721-3-3)
Degree of pollution	2 without conductive pollution in acc. with EN 50178/VDE 0160 (IEC 62103)	2 without conductive pollution in acc. with EN 50178/VDE 0160 (IEC 62103)	2 without conductive pollution in acc. with EN 50178/VDE 0160 (IEC 62103)
Mechanical ambient conditions			
Stationary vibration, sinusoidal			
• Displacement	1.5 mm at 2 Hz to 9 Hz	3.5 mm at 2 Hz to 9 Hz	0.3 mm at 2 Hz to 9 Hz
• Acceleration	5 m/s^2 at 9 Hz to 200 Hz	10 m/s^2 at 9 Hz to 200 Hz 15 m/s^2 at 200 Hz to 500 Hz	1 m/s^2 at 9 Hz to 200 Hz
Other mechanical conditions in accordance with class (greater strength for marine version)	1M2 in acc. with EN 60721-3-1 (IEC 60721-3-1)	2M2 in acc. with EN 60721-3-2 (IEC 60721-3-2)	3M1 in acc. with EN 60721-3-3 (IEC 60721-3-3)
Other ambient conditions			
Biological ambient conditions in accordance with class	1B1 in acc. with EN 60721-3-1 (IEC 60721-3-1)	2B1 in acc. with EN 60721-3-2 (IEC 60721-3-2)	3B2 in acc. with EN 60721-3-3 (IEC 60721-3-3) (without harmful flora)
Chemically active substances in accordance with class	1C1 in acc. with EN 60721-3-1 (IEC 60721-3-1)	2C1 in acc. with EN 60721-3-2 (IEC 60721-3-2)	3C2 in acc. with EN 60721-3-3 (IEC 60721-3-3) (no occurrence of salt mist)
Mechanically active substances in accordance with class	1S1 in acc. with EN 60721-3-1 (IEC 60721-3-1)	2S1 in acc. with EN 60721-3-2 (IEC 60721-3-2)	3S1 in acc. with EN 60721-3-3 (IEC 60721-3-3)

Note: The values specified under storage and transport apply to unpacked converters.

3

Technical data (continued)

Installation conditions and derating data

Current derating

If the converters are operated at installation altitudes > 1000 m above sea level or under coolant temperatures > 35 °C, derating factors k_H and k_T must be taken into account for the rated current (DIN 43671).

Note:

The following applies for water-cooled versions:
When determining the current derating factor, it is essential to consider the ambient temperature as well as the air pressure of the raw-water in the inlet, as components such as the link bus-bars are also subject to air cooling.

This requires the factors k_H and k_T to be determined from the diagrams for air cooling as well as for water cooling. The smaller of the two products (k_H x k_T) must be used as the current derating factor.

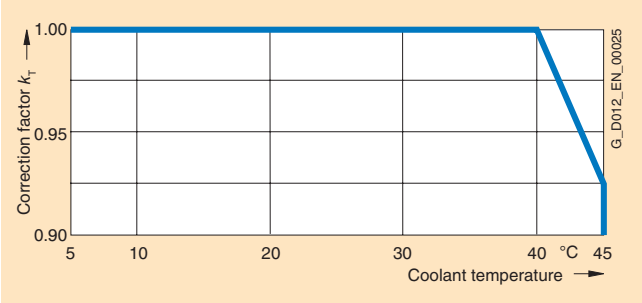

Derating factor k_T with air cooling

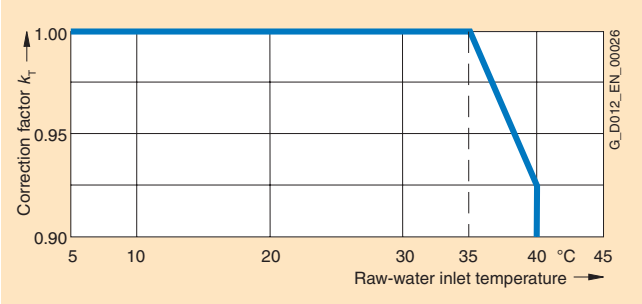

Derating factor k_T with water cooling

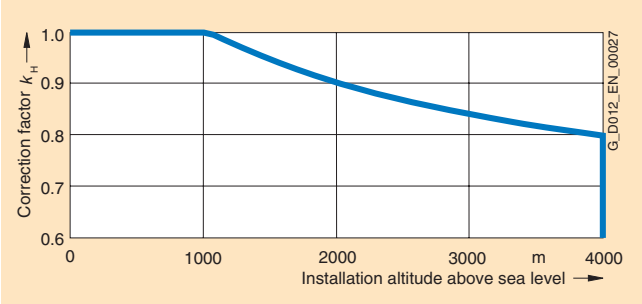

Derating factor k_H with air cooling

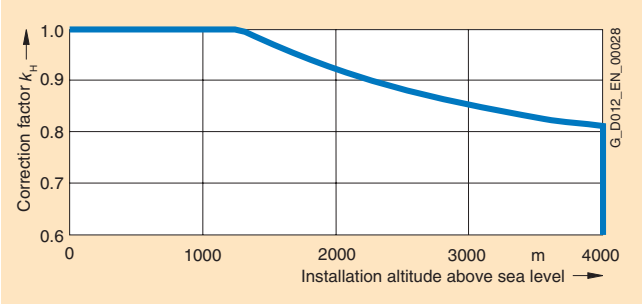

Derating factor k_H with water cooling

For the permitted continuous current I: $I \leq I_{rated} \times k_H \times k_T$

I: permitted continuous current
I_{rated}: rated current

Voltage derating

At installation altitudes > 2000 m, a voltage derating is required in addition to a current derating in accordance with DIN VDE 0110/IEC 664-1 (EN 60664-1/VDE 0110 (IEC 60664-1)). This depends on the air and creepage distances in the unit.

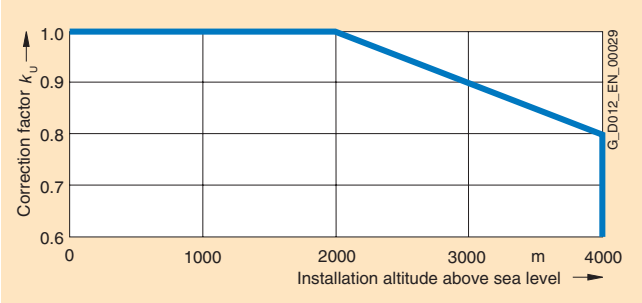

Derating factor k_U

Technical data (continued)

The technical data from the following examples can be found on page 3/18.

Example 1

Converter 6SL3835-2LN43-6AA0

Output voltage: 2 x 3.3 kV

Input voltage: 2 × (2 × 1.7 kV)

Type rating: 19000 kVA, 2 × 1660 A

Installation altitude: 2000 m

Max. ambient temperature: 35 °C

Raw-water inlet temperature: 40 °C

- Ambient temperature:
  - Derating factor k_H = 0.9
  - Derating factor k_T = 1.0
  - Derating factor k_U = 1.0
- Raw-water inlet temperature:
  - Derating factor k_H = 0.925
  - Derating factor k_T = 0.925
  - Derating factor k_U = 1.0

The smaller value for $k_H \times k_T$ results in this case from the diagrams for the raw-water in the inlet.

$I \leq I_{rated} \times 0.925 \times 0.925 = I_{rated} \times 0.856$

A current derating of 14.4% is required.

The maximum available output current of the converter is 1420 A per subsystem.

Example 2

Converter 6SL3835-2LN43-6AA0

Output voltage: 2 x 3.3 kV

Input voltage: 2 × (2 × 1.7 kV)

Type rating: 19000 kVA, 2 × 1660 A

Installation altitude: 2000 m

Max. ambient temperature: 45 °C

Raw-water inlet temperature: 38 °C

- Ambient temperature:
  - Derating factor k_H = 1.0
  - Derating factor k_T = 0.925
  - Derating factor k_U = 1.0
- Raw-water inlet temperature:
  - Derating factor k_H = 1.0
  - Derating factor k_T = 0.955
  - Derating factor k_U = 1.0

The smaller value for $k_H \times k_T$ results in this case from the diagrams for the ambient temperature.

$I \leq I_{rated} \times 0.9 \times 0.925 = I_{rated} \times 0.833$

A current derating of 16.7% is required.

The maximum available output current of the converter is 1382 A per subsystem.

Example 3

Converter 6SL3835-2LN43-6AA0

Output voltage: 2 x 3.3 kV

Input voltage: 2 × (2 × 1.7 kV)

Type rating: 19000 kVA, 2 × 1660 A

Installation altitude: 1000 m

Max. ambient temperature: 45 °C

Raw-water inlet temperature: 38 °C

- Ambient temperature
  - Derating factor k_H = 1.0
  - Derating factor k_T = 0.925
  - Derating factor k_U = 1.0
- Raw-water inlet temperature:
  - Derating factor k_H = 1.0
  - Derating factor k_T = 0.955
  - Derating factor k_U = 1.0

The smaller value for $k_H \times k_T$ results in this case from the diagrams for the ambient temperature.

$I \leq I_{rated} \times 1.0 \times 0.925 = I_{rated} \times 0.925$

A current derating of 7.5% is required.

The maximum available output current of the converter is 1536 A per subsystem.

3

Technical data (continued)

SINAMICS GM150 in IGCT version Water cooling	Type	6SL3835-2LN41-8AA0	6SL3835-2LN42-8AA0	6SL3835-2LN43-6AA0	6SL3835-2LN44-2AA0	6SL3835-2LN45-4AA0
Output voltage 3.3 kV						
Type rating	kVA	10000	16000	19000	24000	28000
Shaft output [1]	kW	9000	13000	17000	20000	25000
	hp	12000	18000	23000	27000	33000
Rated output current	A	1750	2 × 1400	2 × 1660	3 × 1400	3 × 1630
Input voltage	kV	2 × 1.7	2 × (2 × 1.7)	2 × (2 × 1.7)	3 × (2 × 1.7)	3 × (2 × 1.7)
Rated input current [1]	A	2 × 1550	2 × (2 × 1420)	2 × (2 × 1470)	3 × (2 × 1240)	3 × (2 × 1450)
Power loss [2] [3]	kW	80	128	160	192	240
Efficiency [3]	%	99.1	99.1	99.1	99.1	99.1
Max. current requirement of auxiliary supply 50/60 Hz 230 V AC	A	3	6	6	9	9
Max. current requirement of auxiliary supply 50/60 Hz 400 V 3 AC	A	17	20	20	23	23
Precharging current requirement, temporary for approx. 25 s	A	20	40	40	60	60
Cooling water requirement (raw-water/deionized water)	l/min	205	410	410	615	615
Sound pressure level L_{pA}	dB(A)	75	77	77	79	79
Measuring surface level L_s	dB(A)	22	23	23	24	24
Cable cross-sections, line-side, max. connectable per phase [4]	mm^2 (DIN VDE)	6 × 240	6 × 240	6 × 240	6 × 240	6 × 240
	AWG/MCM (NEC, CEC)	6 × 500 MCM	6 × 500 MCM	6 × 500 MCM	6 × 500 MCM	6 × 500 MCM
Cable cross-sections, motor-side, max. connectable per phase [4]	mm^2 (DIN VDE)	6 × 240	6 × 240	6 × 240	6 × 240	6 × 240
	AWG/MCM (NEC, CEC)	6 × 500 MCM	6 × 500 MCM	6 × 500 MCM	6 × 500 MCM	6 × 500 MCM
PE connection, max. connection cross-section at enclosure with M12 screw [4]	mm^2 (DIN VDE)	2 × 120	2 × 120	2 × 120	2 × 120	2 × 120
	AWG/MCM (NEC, CEC)	2 × 250 MCM	2 × 250 MCM	2 × 250 MCM	2 × 250 MCM	2 × 250 MCM
Degree of protection		IP43	IP43	IP43	IP43	IP43
Dimensions (with cabinet doors and side panels)						
• Width	mm	5300	9400	9400	14300	14800
• Height	mm	2540	2540	2540	2540	2540
• Depth	mm	1600	1600	1600	1600	1600
Circuit design (pages 3/4 and 3/5)		⑨	⑪	⑪	⑫	⑫
Weight	kg	5400	9800	9800	15000	15400

1) The figures for the rated input current and the power figures in hp and kW are approximate values which were determined for operation with induction motors and for a typical value of the cos phi power factor and efficiency of the motor. The hp figures are based on the NEC and CEC directives for the North American market.
The kW values are quoted in steps which can be divided by 1000. Both approximate values need to be adapted to the motor which is actually used.

2) Approx. 5% of the power loss is dissipated into the atmosphere.

3) Without cooling system.

4) Figures refer to a subsystem; please refer to “Circuit designs” for the number of subsystems to be connected on the line and motor side.

SINAMICS SM150

4

4/2	**Overview**
4/2	**Benefits**
4/2	**Design**
4/6	**Function**
4/8	**Selection and ordering data**
4/8	**Options**
	Technical data
4/14	General technical data
4/15	Control properties
4/15	Ambient conditions
4/16	Installation conditions and derating data
4/18	Converter-related technical data

SINAMICS SM150

Overview

SINAMICS SM150

Water-cooled regenerative SINAMICS SM150 converters are available as single or multi-motor drives with the standard medium voltage IGCT power semiconductors. With multi-motor drives, a common DC bus enables the direct exchange of energy in generator and motor applications.

IGCT converters are available for the following voltage and power ranges:

Rated output voltage	Max. continuous power (without overload capability)	Power (175% overload capability)
3.3 kV	10 MVA to 28 MVA	5 MVA to 17 MVA

The rated output in the concrete application will depend on the necessary load cycle. The transient maximum outputs are 10.5 MVA, 20 MVA and 30 MVA.

Global use

SINAMICS SM150 converters are manufactured to international standards and regulations, making them ideally suited for global use. These converters are also available in a marine version (meeting the requirements of all major classification organizations).

Benefits

- Compact design and high flexibility in configuration ensures easy plant integration
- Easy operation and monitoring on the convenient operator panel
- Easy and reliable operation through integrated maintenance functions: the converter signals early and automatically if maintenance is required or components need to be exchanged
- High robustness and reliability due to the use of IGCT power semiconductors in the high power range and fuseless design combined with intelligent reaction to external disturbances
- Can be easily integrated into automation solutions due to PROFIBUS interface supplied as standard and various analog and digital interfaces
- High level of service-friendliness through innovative power section design with compact phase modules and easy access to all components
- Assists system cost effectiveness by enabling reactive power to be made available to other drives given suitable configuration

Design

Active Line Modules and Motor Modules share an almost identical structure with both the single-motor and the multi-motor drive. Phase modules in which IGCTs, diodes etc. are grouped together in one compact system are used in both.

Single-motor drive

With a single-motor drive, one Active Line Module and one Motor Module are connected “back-to-back” in the basic circuit via a DC link.

For higher output ratings, two or three complete converter units with isolated DC links are operated in parallel.

Multi-motor drive

With multi-motor drives, up to four power sections are operated on the common DC bus. In addition to the Active Line Module, three Motor Modules with three motors can be operated on the common DC bus with utilization of the direct exchange of energy.

The converter consists of cabinet units for the Active Line Module and for the Motor Module. One of three phase modules and the control section in the Motor Module cabinet are highlighted in the illustration.

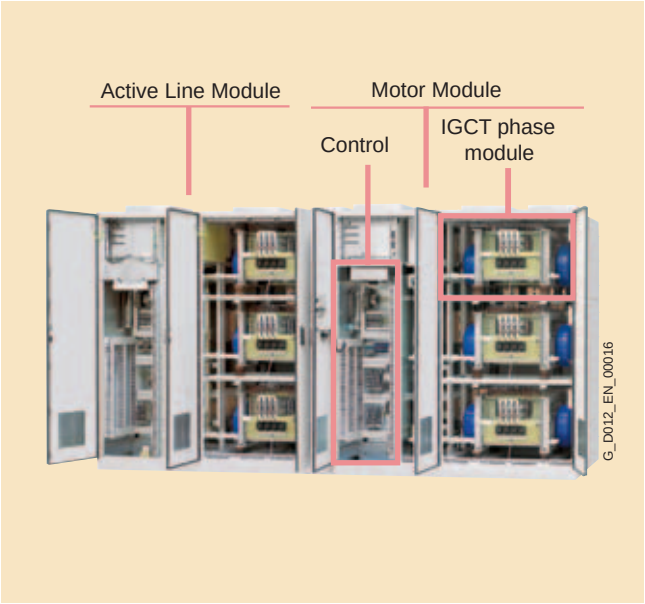

SINAMICS GM150, internal arrangement (without cooling unit)

Design (continued)

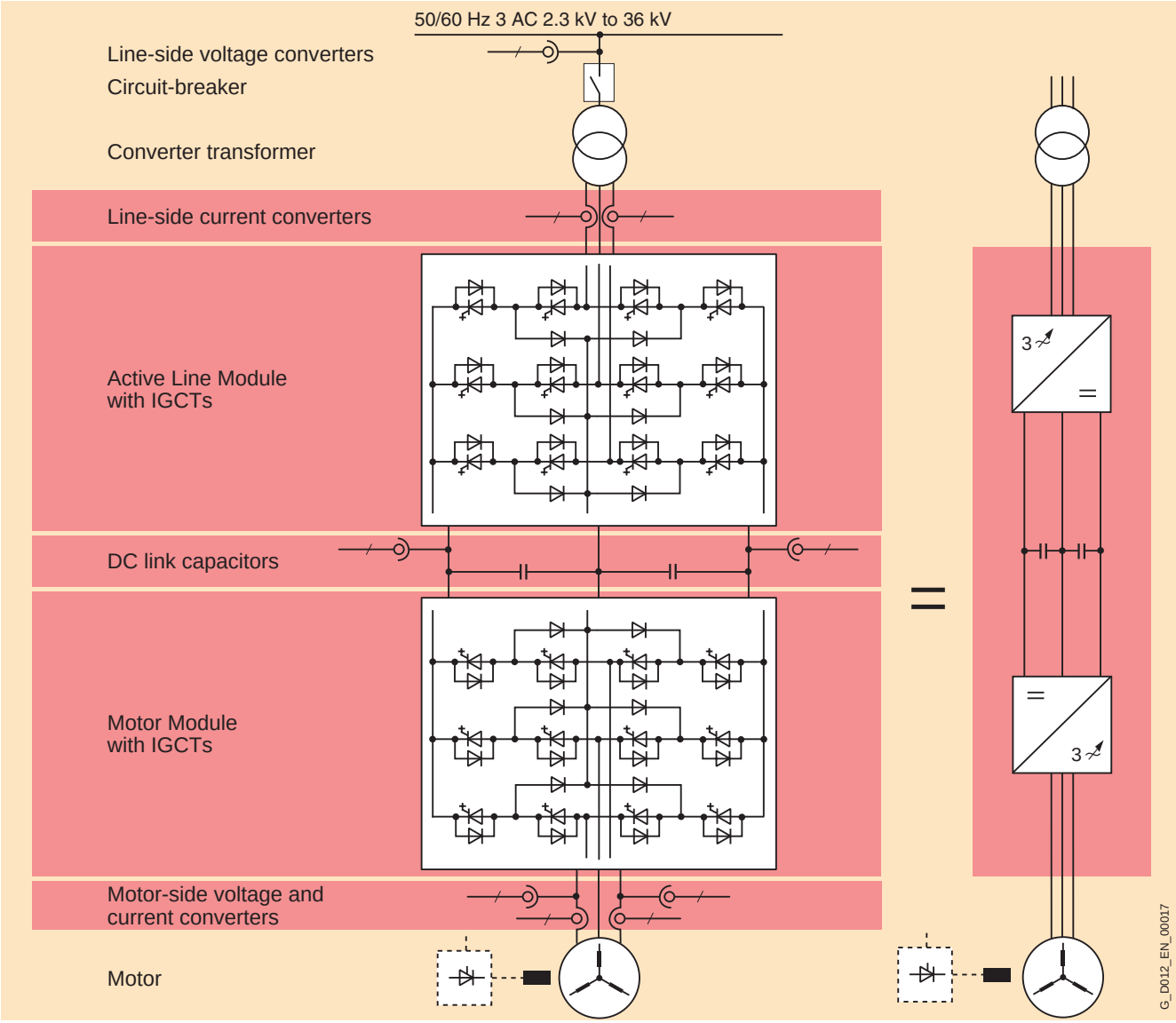

Block diagram

4

Design (continued)

The following circuit designs are available for SINAMICS SM150.

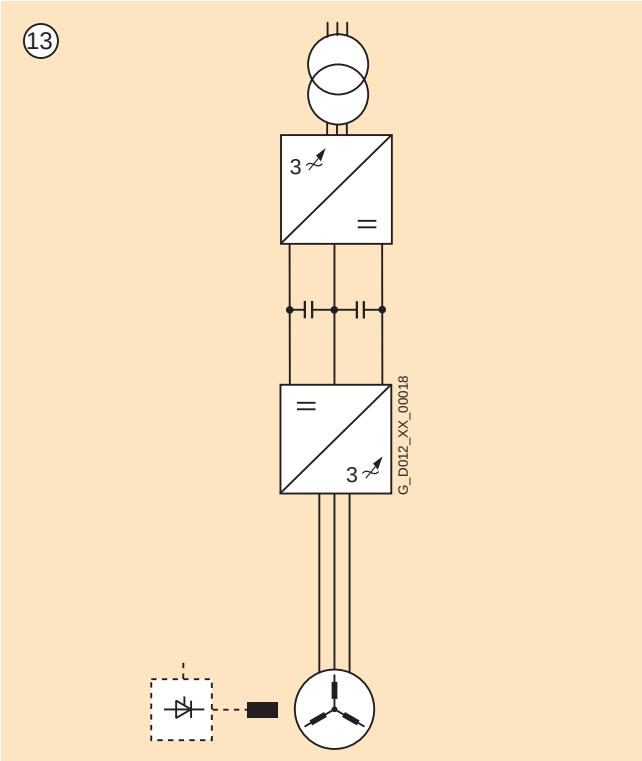

Basic circuit

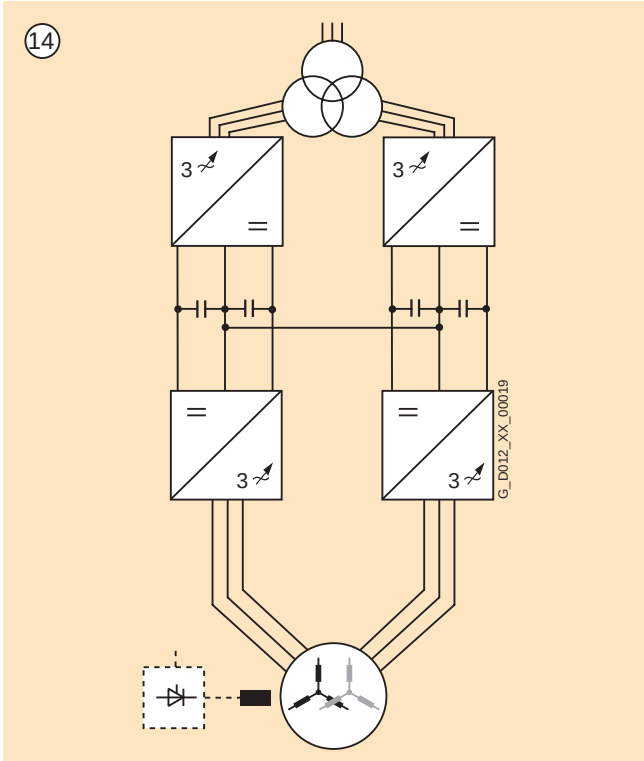

Power increased by parallel connection of two converter units (additionally reduction of line harmonic distortions) [1)]

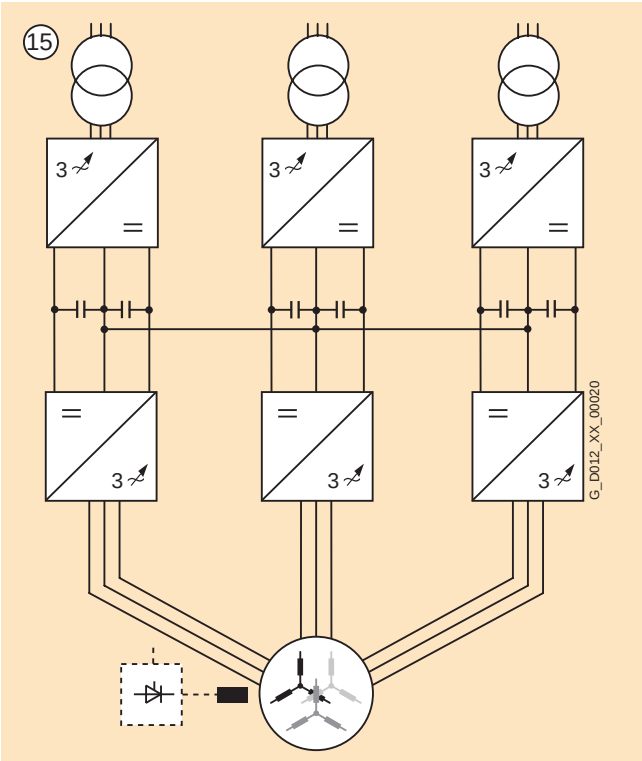

Power increased by parallel connection of three converter units (additionally reduction of line harmonic distortions) [1)]

1) Requires a motor with isolated winding systems.

Design (continued)

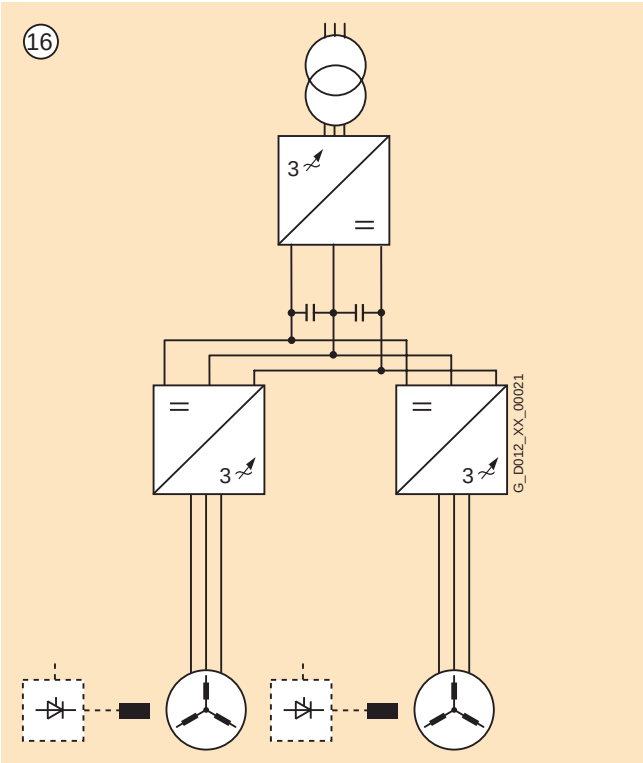

DC bus configuration with two motors on common DC link

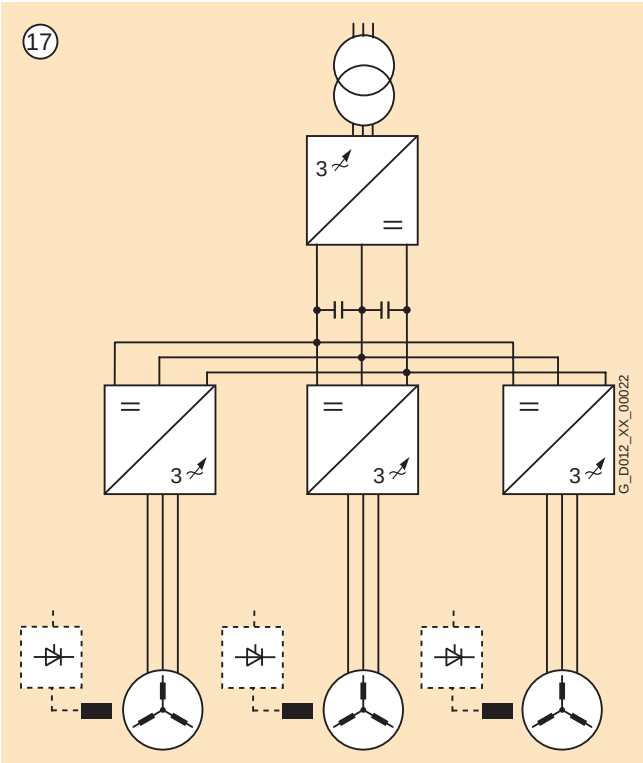

DC bus configuration with three motors on common DC link

On the DC bus configurations with two or three motors, energy can be exchanged through the common DC link with alternate operation as a motor and generator. This results in savings in the Active Line Module, the transformers and the circuit-breakers. These configurations are used mainly for single-stand cold rolling mills with a coiler and for transmission test stands.

Function

Characteristic features

SINAMICS SM150	
Line Module (line-side rectifier)	
Active Line Module (four-quadrant operation)	Standard
Motor Module (motor-side inverter)	
Voltage range	3.3 kV
Power range (typ.)	5 MVA to 28 MVA
Cooling method	
• Water cooling	Standard
Control modes	
• Induction motor	Standard
• Synchronous motor, separately excited	Option
• Synchronous motor, permanently excited	Option
DC bus configuration with several Motor Modules on one common DC bus	Standard

Software and protection functions

SINAMICS SM150	Description
Closed-loop control	The motor-side closed-loop control is realized as a field-oriented closed-loop vector control which can be operated as a speed or torque control as required. The closed-loop vector control achieves the dynamics of a DC drive. This is made possible by the fact that the current components forming the torque and flux can be controlled precisely and independently of each other. Prescribed torques can thus be observed and limited accurately. In the speed range from 1:10, the field-oriented closed-loop control does not require an actual speed value encoder. An actual speed value encoder is required in the following cases: • High dynamics requirements • Torque control/constant torque drives with setting range > 1:10 • Very low speeds • Very high speed accuracy
Setpoint input	The setpoint can be defined internally or externally; internally as a fixed, motorized potentiometer or jog setpoint, externally via the PROFIBUS interface or an analog input of the customer's terminal block. The internal fixed setpoint and the motorized potentiometer setpoint can be switched over or adjusted using control commands via all interfaces.
Ramp-function generator	A user-friendly ramp-function generator with separately adjustable ramp-up and ramp-down times, together with adjustable rounding times in the lower and upper speed ranges, improves the control response and therefore prevents mechanical overloading of the drive train. The ramp-down ramps can be parameterized separately for emergency stop.
$V_{dc\ max}$ controller	The $V_{dc\ max}$ controller automatically prevents overvoltages in the DC link if the set ramp-down ramp is too short, for example. This can also extend the set ramp-down time.
Kinetic buffering (KIP)	Line voltage failures are bridged to the extent permitted by the kinetic energy of the drive train. The speed drops depending on the moment of inertia and the load torque. The current speed setpoint is resumed when the line voltage returns.
Automatic restart (option)	The automatic restart switches the drive on again when the power is restored after a power failure or a general fault, and ramps up to the current speed setpoint.
Flying restart	The flying restart function permits bumpless connection of the converter to a rotating motor.
Diagnostics functions	• Self-diagnostics of control hardware • Non-volatile memory for reliable diagnostics when the power supply fails • Monitoring of HV-IGBTs with individual messages for each slot • User-friendly on-site operator panel with plain text messages
Operating hours and switching cycle counter	The operating hours of the fans are detected and logged so that preventive maintenance or replacements can be performed. The switching cycles of the circuit-breaker are detected and addedup, to form the basis of preventive maintenance work.
Operator protection	The cabinet doors of the power sections are fitted with electromagnetic locks. This prevents the cabinet doors from being opened while hazardous voltages are present inside the cabinet.

Function (continued)

Software and protection functions

SINAMICS SM150	Description
EMERGENCY STOP button	The converters are equipped as standard with an EMERGENCY STOP button with protective collar which is fitted in the cabinet door. The contacts of the pushbutton are connected in parallel to the terminal block so they can be integrated in a protection concept on the plant side. EMERGENCY STOP category 0 is set as standard for an uncontrolled shutdown (DIN EN 60204-1/VDE 0113-1 (IEC 60204-1)). The function includes voltage disconnection of the converter output through the circuit-breaker. Consequently the motor coasts down. EMERGENCY STOP category 1 is optionally available for a controlled shutdown.
Insulation monitoring	The converters feature insulation monitoring of the whole galvanic network from the secondary side of the transformer to the stator windings of the motor.
I/O monitoring	An extensive package of options for I/O monitoring (from the transformer and the motor through to the auxiliaries) is available. In addition it is possible to monitor the temperature with thermocouples or PT100 resistors.
Thermal overload protection	A warning message is issued first when the overtemperature threshold responds. If the temperature rises further, either a shutdown is carried out or automatic influencing of the output current so that a reduction in the thermal load is achieved. Following elimination of the cause of the fault (e.g. improvement of ventilation), the original operating values are automatically resumed. In the case of water-cooled converters, the water temperature and flow rate are detected at several points in the cooling circuit and evaluated. An extensive self-diagnostics protects the converter and reports faults.
Grounding switch (option)	If grounding on the line or motor side is required for safety and protection reasons, a motor operated grounding switch can be ordered. For safety reasons, the converter controller locks these grounding switches against activation while voltage is still present. The control is integrated into the protection and monitoring chain of the converter. The grounding switches are inserted automatically when the standard grounding switches of the DC link are inserted.

SIMATIC OP 177B operator panel

The SIMATIC OP 177B operator panel is fitted into the cabinet door of the SINAMICS SM150 for operation, monitoring and commissioning.

It has the following features and characteristics:

- 5.7" STN touch display
- Context-dependent operations by touch, permanently available functions can be selected using individual keys
- Non-volatile message buffer, no battery

English and German are available as operator panel languages.

SINAMICS SM150

Selection and ordering data

Type rating	Shaft output		Rated output current	SINAMICS SM150	Circuit designs (pages 4/4 and 4/5)
kVA	kW	hp	A	Order No.	Fig. No.
Output voltage 3.3 kV					
10000	10000	13000	1750	**6SL3845-7NN41-8AA0**	⑬
19000	19000	25000	2 × 1660	**6SL3845-7NN43-6AA0**	⑭
28000	28000	36000	3 × 1630	**6SL3845-7NN45-4AA0**	⑮
10000	10000	13000	2 × 1750 [1]	**6SL3845-7NN41-8AB0**	⑯
10000	10000	13000	3 × 1750 [2]	**6SL3845-7NN41-8AC0**	⑰

4

Options

When ordering a converter with options, add **"-Z"** to the order number of the converter, followed by the order code(s) for the desired option(s).

Example:

6SL3845-7NN41-8AA0-Z
+L08+L60+...

In the following tables, related options are arranged in groups. Whether the options can be combined or are mutually exclusive is indicated within these groups. A detailed description of the options can be found in the chapter Description of options.

Output-side options	
Output reactor	**L08**

Protection functions		**L48**	**L49**	**L51**	**L60**	**M10**
Grounding switch at converter input (motor-operated)	**L48**		✓	✓	✓	✓
Grounding switch at converter output (motor-operated)	**L49**	✓		✓	✓	✓
Disconnector at converter output	**L51**	✓	✓		✓	✓
EMERGENCY STOP category 1	**L60**	✓	✓	✓		✓
Safety closing/interlocking system	**M10**	✓	✓	✓	✓	

✓	Options can be combined
–	Options are mutually exclusive

1) Configuration with **two** motors which operate on a common DC link. With alternate operation as a motor and generator, energy is exchanged through the common DC link. Differences in the energy balance are equalized through the infeed (Active Infeed).

2) Configuration with **three** motors which operate on a common DC link. With alternate operation as a motor and generator, energy is exchanged through the common DC link. Differences in the energy balance are equalized through the infeed (Active Infeed).

Options (continued)

Temperature detection and evaluation (standard: 3 PT100 inputs)		L80	L81	L82	L90	L91	L92	L93	L94	L95	L96
2 thermistor protection relays for alarm and fault [1]	L80		–	–	✓	✓	✓	✓	✓	✓	✓
2 x 2 thermistor protection relays for alarm and fault [1]	L81	–		–	✓	✓	✓	✓	✓	✓	✓
3 x 2 thermistor protection relays for alarm and fault [1]	L82	–	–		✓	✓	✓	✓	✓	✓	✓
PT100 evaluation unit with 3 inputs [1]	L90	✓	✓	✓		–	–	–	–	–	–
2 PT100 evaluation units with 3 inputs each [1]	L91	✓	✓	✓	–		–	–	–	–	–
3 PT100 evaluation units with 3 inputs each [1]	L92	✓	✓	✓	–	–		–	–	–	–
PT100 evaluation unit with 6 inputs, 2 analog outputs (outputs for display connected to control) [1]	L93	✓	✓	✓	–	–	–		–	–	–
2 PT100 evaluation units each with 6 inputs and 2 analog outputs (outputs for display connected to control) [2]	L94	✓	✓	✓	–	–	–	–		–	–
PT100 evaluation unit with 6 inputs for explosion-proof motors, 2 analog outputs (outputs for display connected to control) [1]	L95	✓	✓	✓	–	–	–	–	–		–
2 PT100 evaluation units each with 6 inputs for explosion-proof motors and 2 analog outputs (outputs for display connected to control) [2]	L96	✓	✓	✓	–	–	–	–	–	–	

1) Options **L..** cannot be combined with option **G61** (additional TM31 Terminal Module).

2) Options **L94** and **L96** cannot be combined with option **G61** and **G62** (additional TM31 Terminal Modules) and with option **E86** (additional analog inputs).

Control of auxiliaries		N30	N31	N32	N33	N35	N36	N37	N38
The contractor is switched on with the ON command at the converter and switched off with the OFF command (example: external fan on the motor). The supply voltage for the auxiliary to be powered must be provided externally.									
Controlled outgoing feeder for auxiliaries 400 V 3 AC, max. 4 kW	N30		–	–	–	✓	✓	✓	✓
Controlled outgoing feeder for auxiliaries 400 V 3 AC, max. 7 kW	N31	–		–	–	✓	✓	✓	✓
Controlled outgoing feeder for auxiliaries 400 V 3 AC, max. 11 kW	N32	–	–		–	✓	✓	✓	✓
Controlled outgoing feeder for auxiliaries 400 V 3 AC, max. 15 kW	N33	–	–	–		✓	✓	✓	✓
The contractor is switched off with the ON command at the converter and switched on with the OFF command (example: heater). The supply voltage for the auxiliary to be powered must be provided externally.									
Controlled outgoing feeder for auxiliaries 230 V 1 AC, max. 1 kW	N35	✓	✓	✓	✓		–	–	–
Controlled outgoing feeder for auxiliaries 230 V 1 AC, max. 2 kW	N36	✓	✓	✓	✓	–		–	–
Controlled outgoing feeder for auxiliaries 230 V 1 AC, max. 3 kW	N37	✓	✓	✓	✓	–	–		–
Controlled outgoing feeder for auxiliaries 230 V 1 AC, max. 4 kW	N38	✓	✓	✓	✓	–	–	–	

✓	Options can be combined
–	Options are mutually exclusive

Options (continued)

Connection of signal cables (standard: connection of signal cables directly to the terminals of the Terminal Modules)		M32	M33
Customer's terminal block with cage clamp terminals for signal cables up to 2.5 mm^2	M32		–
Customer's terminal block with screw terminals for signal cables up to 2.5 mm^2	M33	–	

Control and display instruments in the door of the control cabinet		K20	K21	K22
Signal lamps and start/stop button in the cabinet door	K20		–	–
Display instruments in the cabinet door for voltage, current, speed and power also including signal lamps and start/stop button	K21	–		–
Display instruments in the cabinet door for current, speed, power and winding temperature also including signal lamps and start/stop button	K22	–	–	

Interface modules for additional customer connections		G61	G62	G63
Additional TM31 Terminal Module [1]	G61		✓	✓
Second additional TM31 Terminal Module [1]	G62	✓		✓
Additional TM15 Terminal Module	G63	✓	✓	

1) For exclusions of options **G61** and **G62**, see Description of options.

Additional analog inputs/outputs (isolated)		E86	E87
Additional analog inputs (isolated) [1]	E86		✓
Additional analog outputs (isolated) [2]	E87	✓	

1) Option **E86** cannot be combined with option **G62** (second additional TM31 Terminal Module) and with options **L94** and **L96** (2 PT100 evaluation units).
2) Option **E87** cannot be combined with option **G62** (second additional TM31 Terminal Module).

Other interface modules		G66	G70	G71
PADU8 diagnostics module (8 analog and 8 digital signals)	G66		✓	✓
Pulse distributor for forwarding the speed encoder signal	G70	✓		✓
Optical bus terminal (OBT) for PROFIBUS	G71	✓	✓	

✓	Options can be combined
–	Options are mutually exclusive

Options (continued)

Industry-specific options	
NAMUR terminal block	B00

Functional options		E01	E02	E03	L32
Control for separately excited synchronous motors with slip-ring excitation	E01		–	–	✓
Control for separately excited synchronous motors with brushless reverse field excitation	E02	–		–	✓
Control for permanently excited synchronous motors	E03	–	–		✓
Automatic restart	L32	✓	✓	✓	

Documentation (standard: PDF format in English on CD-ROM)		D00	D02	D15	D56	D72	D77	D78	D84	D92	Y10
Documentation in German	D00		✓	✓	–	–	–	–	–	–	✓
Circuit diagrams, terminal diagrams and dimension drawings in DXF format [1]	D02	✓		✓	✓	✓	✓	✓	✓	✓	✓
One set of printed documentation (multiple orders possible)	D15	✓	✓		✓	✓	✓	✓	✓	✓	✓
Documentation in Russian (on request)	D56	–	✓	✓		–	–	–	–	–	✓
Documentation in Italian (on request)	D72	–	✓	✓	–		–	–	–	–	✓
Documentation in French (on request)	D77	–	✓	✓	–	–		–	–	–	✓
Documentation in Spanish	D78	–	✓	✓	–	–	–		–	–	✓
Documentation in Chinese	D84	–	✓	✓	–	–	–	–		–	✓
Documentation in Japanese (on request)	D92	–	✓	✓	–	–	–	–	–		✓
Circuit diagrams with customer-specific description field (plain text required) [1]	Y10	✓	✓	✓	✓	✓	✓	✓	✓	✓	

1) The equipment-specific documents (circuit diagrams etc.) are available only in English/German.

✓	Options can be combined
–	Options are mutually exclusive

Options (continued)

Rating plate language (standard: English/German)		T58	T60	T80	T85	T90	T91
Rating plate in English/French	T58		–	–	–	–	–
Rating plate in English/Spanish	T60	–		–	–	–	–
Rating plate in English/Italian	T80	–	–		–	–	–
Rating plate in English/Russian (on request)	T85	–	–	–		–	–
Rating plate in English/Japanese (on request)	T90	–	–	–	–		–
Rating plate in English/Chinese (on request)	T91	–	–	–	–	–	

Converter acceptance tests in presence of customer		F03	F73	F77	F97
Visual acceptance of converter	F03		–	–	–
Functional acceptance of converter with inductive load	F73	–		✓	–
Acceptance of insulation test of the converter [1]	F77	–	✓		–
Customer-specific converter acceptance tests (on request)	F97	–	–	–	

1) Option **F77** can only be ordered in connection with option **F73**.

Cooling unit (standard: cooling unit with one stainless steel plate-type heat exchanger)		W02	W11	W12	W14	Y40
Cooling unit with redundant stainless steel plate-type heat exchangers	W02		–	–	–	–
Cooling unit with one titanium plate-type heat exchanger	W11	–		–	–	–
Cooling unit with redundant titanium plate-type heat exchangers	W12	–	–		–	–
Converter without cooling unit (plant scope)	W14	–	–	–		–
Raw-water data deviates from technical data (on request) [1]	Y40	–	–	–	–	

1) Option **Y40** includes a cooling system which is adapted to the raw-water data according to the customer's specifications.

✓	Options can be combined
–	Options are mutually exclusive

Options (continued)

Other options		**L50**	**L55**	**Y09**
Cabinet lighting and service socket outlet in control section	**L50**		✓	✓
Anti-condensation heating for cabinet	**L55**	✓		✓
Special paint finish according to RAL .... (in a color other than RAL 7035; plain text required)	**Y09**	✓	✓	

✓	Options can be combined
–	Options are mutually exclusive

SINAMICS SM150

Technical data

General technical data	
Power components	IGCTs
Line-side converter	Regulated, self-commutating feed/feedback unit (Active Line Module)
Motor-side converter	Inverter (Motor Module)
Closed-loop control	Closed-loop vector control
Drive quadrants	4 (driving and braking, 2 directions of rotation each)
Isolation of power section/ controller and closed-loop control	Optical conductor, isolation transformer
Auxiliary current supply (for fans, coolant pumps, precharging the DC link capacitors, controller and closed-loop control)	• 230 V 1 AC ±10%, 50/60 Hz ±3% and • 400 V 3 AC ±10%, 50/60 Hz ±3%
Installation altitude	≤ 1000 m above sea level: no derating > 1000 m to 4000 m above sea level: current derating required > 2000 m to 4000 m above sea level: additionally voltage derating required
Insulation	In accordance with DIN EN 50178/VDE 0160 (IEC 62103): pollution degree 2 (without conductive pollution), condensation not permitted
Degree of protection	In accordance with EN 60529/VDE 0470 T1 (IEC 60529): IP43
Protection class	In accordance with DIN EN 61140/VDE 0140 T1 (IEC 61140): 1
Shock protection	BGV A 3
Interference transmission	In accordance with DIN EN 61800-3/VDE 0160 T100 (IEC 61800-3): no RI suppression
Paint finish/color	Indoor requirements/RAL 7035, light gray
Compliance with standards	
• Standards	- EN 61800-3/VDE 0160 T100 (IEC 61800-3) - EN 61800-4/VDE 0160 T104 (IEC 61800-4) - EN 60146-1-1/VDE 0558 T11 (IEC 60146-1-1) - EN 50178/VDE 0160 T100 (IEC 62103) - EN 60204-11/VDE 0113 T11 (IEC 60204-11)
• EU directives	- 98/37/EC + amendments (machinery directive) - 89/336/EEC + amendments (electromagnetic compatibility)
Water cooling	Water-water cooling unit, internal circuit, deionized water
Permitted coolant temperature (raw-water)	
• Inlet	+5 °C to +35 °C
• Outlet	max. +40 °C

Rated data	
Output voltage	**3.3 kV**
Input voltage	3.3 kV
Tolerance of input voltage	±10%
Line frequency	50/60 Hz ±3%
Line factor fundamental mode	1

Technical data (continued)

	Operation of induction motors		Operation of separately excited synchronous motors
	without speed encoder	with speed encoder	with speed encoder
Control properties			
Operating range			
• Lower limit of speed control range (% of rated motor speed)	5%	0%	0%
• Max. permissible output frequency	250 Hz	250 Hz	90 Hz
• Field weakening range	1:3	1:3	1:4
Stationary operation			
• Speed accuracy (% of rated motor speed)	±0.2% (from 5% rated speed)	±0.01%	±0.01%
• Torque accuracy (% of rated torque)	±5% (from 5% rated speed)	±5%	±2%
Dynamic operation			
• Torque rise time	5 ms	5 ms	5 ms

	Storage	Transport	Operation
Climatic ambient conditions			
Ambient temperature	–25 °C to +70 °C	–25 °C to +70 °C	+5 °C to +40 °C
Relative air humidity	5% to 95% (only slight condensation permitted; converter must be completely dry before commissioning)	5% to 75%	5% to 85% (condensation not permitted)
Other climatic conditions in accordance with class	1K3 in acc. with EN 60721-3-1 (IEC 60721-3-1) (formation of ice not permitted)	2K2 in acc. with EN 60721-3-2 (IEC 60721-3-2)	3K3 in acc. with EN 60721-3-3 (IEC 60721-3-3)
Degree of pollution	2 without conductive pollution in acc. with EN 50178/VDE 0160 (IEC 62103)	2 without conductive pollution in acc. with EN 50178/VDE 0160 (IEC 62103)	2 without conductive pollution in acc. with EN 50178/VDE 0160 (IEC 62103)
Mechanical ambient conditions			
Stationary vibration, sinusoidal			
• Displacement	1.5 mm at 2 Hz to 9 Hz	3.5 mm at 2 Hz to 9 Hz	0.3 mm at 2 Hz to 9 Hz
• Acceleration	5 m/s^2 at 9 Hz to 200 Hz	10 m/s^2 at 9 Hz to 200 Hz 15 m/s^2 at 200 Hz to 500 Hz	1 m/s^2 at 9 Hz to 200 Hz
Other mechanical conditions in accordance with class (greater strength for marine version)	1M2 in acc. with EN 60721-3-1 (IEC 60721-3-1)	2M2 in acc. with EN 60721-3-2 (IEC 60721-3-2)	3M1 in acc. with EN 60721-3-3 (IEC 60721-3-3)
Other ambient conditions			
Biological ambient conditions in accordance with class	1B1 in acc. with EN 60721-3-1 (IEC 60721-3-1)	2B1 in acc. with EN 60721-3-2 (IEC 60721-3-2)	3B2 in acc. with EN 60721-3-3 (IEC 60721-3-3) (without harmful flora)
Chemically active substances in accordance with class	1C1 in acc. with EN 60721-3-1 (IEC 60721-3-1)	2C1 in acc. with EN 60721-3-2 (IEC 60721-3-2)	3C2 in acc. with EN 60721-3-3 (IEC 60721-3-3) (no occurrence of salt mist)
Mechanically active substances in accordance with class	1S1 in acc. with EN 60721-3-1 (IEC 60721-3-1)	2S1 in acc. with EN 60721-3-2 (IEC 60721-3-2)	3S1 in acc. with EN 60721-3-3 (IEC 60721-3-3)

Note: The values specified under storage and transport apply to unpacked converters.

Technical data (continued)

Installation conditions and derating data

Current derating

If the converters are operated at installation altitudes > 1000 m above sea level or under coolant temperatures > 35 °C, derating factors k_H and k_T must be taken into account for the rated current (DIN 43671).

Note:

The following applies for water-cooled versions:

When determining the current derating factor, it is essential to consider the ambient temperature as well as the air pressure of the raw-water in the inlet, as components such as the link bus-bars are also subject to air cooling.

This requires the factors k_H and k_T to be determined from the diagrams for air cooling as well as for water cooling. The smaller of the two products ($k_H \times k_T$) must be used as the current derating factor.

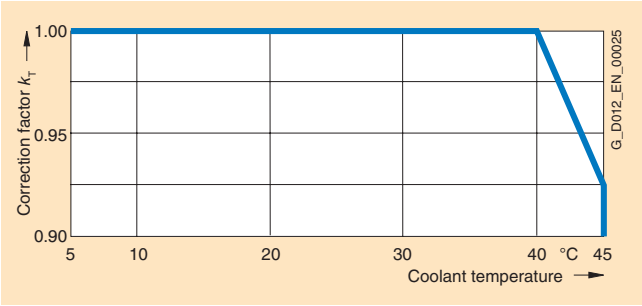

Derating factor k_T with air cooling

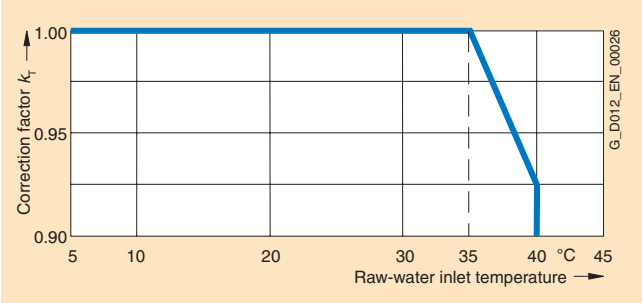

Derating factor k_T with water cooling

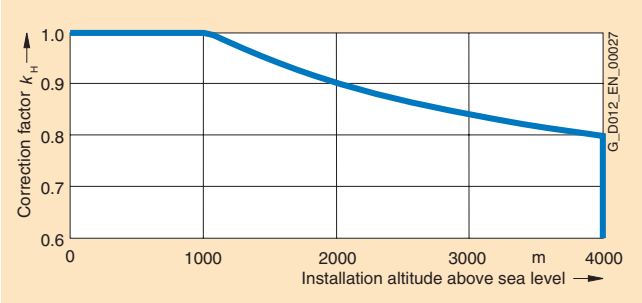

Derating factor k_H with air cooling

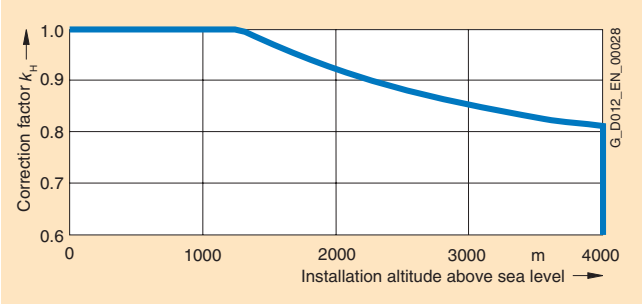

Derating factor k_H with water cooling

For the permitted continuous current I: $I \leq I_{rated} \times k_H \times k_T$

I: permitted continuous current
I_{rated}: rated current

Voltage derating

At installation altitudes > 2000 m, a voltage derating is required in addition to a current derating (EN 60664-1/VDE 0110 (IEC 60664-1)). This depends on the air and creepage distances in the unit.

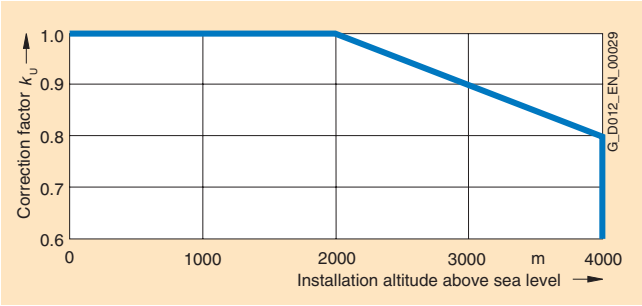

Derating factor k_U

Technical data (continued)

The technical data from the following examples can be found on page 4/18.

Example 1

Converter 6SL3845-7NN41-8AA0

Output voltage: 3.3 kV

Input voltage: 3.3 kV

Type rating: 10000 kVA, 1750 A

Installation altitude: 2000 m

Max. ambient temperature: 35 °C

Raw-water inlet temperature: 40 °C

- Ambient temperature:
  - Derating factor k_H = 0.9
  - Derating factor k_T = 1.0
  - Derating factor k_U = 1.0
- Raw-water inlet temperature:
  - Derating factor k_H = 0.925
  - Derating factor k_T = 0.925
  - Derating factor k_U = 1.0

The smaller value for $k_H \times k_T$ results in this case from the diagrams for the raw-water in the inlet.

$I \leq I_{rated} \times 0.925 \times 0925 = I_{rated} \times 0.856$

A current derating of 14.4% is required.

The maximum available output current of the converter is 1497 A.

Example 2

Converter 6SL3845-7NN41-8AA0

Output voltage: 3.3 kV

Input voltage: 3.3 kV

Type rating: 10000 kVA, 1750 A

Installation altitude: 2000 m

Max. ambient temperature: 43 °C

Raw-water inlet temperature: 37 °C

- Ambient temperature:
  - Derating factor k_H = 0.9
  - Derating factor k_T = 0.955
  - Derating factor k_U = 1.0
- Raw-water inlet temperature:
  - Derating factor k_H = 0.925
  - Derating factor k_T = 0.97
  - Derating factor k_U = 1.0

The smaller value for $k_H \times k_T$ results in this case from the diagrams for the ambient temperature.

$I \leq I_{rated} \times 0.9 \times 0.955 = I_{rated} \times 0.86$

A current derating of 14% is required.

The maximum available output current of the converter is 1504 A.

Technical data (continued)

SINAMICS SM150 Water cooling	Type	6SL3845- 7NN41-8AA0	6SL3845- 7NN43-6AA0	6SL3845- 7NN45-4AA0	6SL3845- 7NN41-8AB0	6SL3845- 7NN41-8AC0
Output voltage 3.3 kV						
Type rating	kVA	10000	19000	28000	10000	10000
Shaft output [1]	kW	10000	19000	28000	10000 [2]	10000 [2]
	hp	13000	25000	36000	13000 [2]	13000 [2]
Rated output current	A	1750	2 × 1660	3 × 1630	2 × 1750	3 × 1750
Input voltage	kV	3.3	2 × 3.3	3 × 3.3	3.3	3.3
Rated input current [1]	A	1770	2 × 1680	3 × 1650	1770	1770
Power loss [3] [4]	kW	100	200	300	150	225
Efficiency [4]	%	99.0	99.0	98.9	99.3	99.2
Max. current requirement of auxiliary supply 50/60 Hz 230 V AC	A	6	12	18	9	12
Max. current requirement of auxiliary supply 50/60 Hz 400 V 3 AC	A	17	20	23	19	20
Precharging current requirement, temporary for approx. 25 s	A	20	40	60	22	24
Cooling water requirement (raw-water/deionized water)	l/min	325	650	975	435	650
Sound pressure level L_{pA}	dB(A)	75	77	79	76	77
Measuring surface level L_s	dB(A)	22	23	24	22,5	23
Cable cross-sections, line-side, max. connectable per phase [5]	mm^2 (DIN VDE)	6 × 240	6 × 240	6 × 240	6 × 240	6 × 240
	AWG/MCM (NEC, CEC)	6 × 500 MCM	6 × 500 MCM	6 × 500 MCM	6 × 500 MCM	6 × 500 MCM
Cable cross-sections, motor-side, max. connectable per phase [5]	mm^2 (DIN VDE)	6 × 240	6 × 240	6 × 240	6 × 240	6 × 240
	AWG/MCM (NEC, CEC)	6 × 500 MCM	6 × 500 MCM	6 × 500 MCM	6 × 500 MCM	6 × 500 MCM
PE connection, max. connection cross-section at enclosure with M12 screw [5]	mm^2 (DIN VDE)	2 × 120	2 × 120	2 × 120	2 × 120	2 × 120
	AWG/MCM (NEC, CEC)	2 × 250 MCM	2 × 250 MCM	2 × 250 MCM	2 × 250 MCM	2 × 250 MCM
Degree of protection		IP43	IP43	IP43	IP43	IP43
Dimensions (with cabinet doors and side panels)						
• Width	mm	6100	11200	16300	8900	11700
• Height	mm	2540	2540	2540	2540	2540
• Depth	mm	1600	1600	1600	1600	1600
Circuit design (pages 4/4 and 4/5)		⑬	⑭	⑮	⑯	⑰
Weight	kg	6400	11800	17200	9300	12200

1) The figures for the rated input current and the power figures in hp and kW are approximate values which were determined for operation with synchronous motors, for the power factor cos phi = 1 and taking into account the efficiency of the motor. The hp figures are based on the NEC and CEC directives for the North American market.
The kW values are quoted in steps which can be divided by 1000. Both approximate values need to be adapted to the motor which is actually used.

2) The underlying circuit design is based on a drive group in which the drives operate both as motor and generator (see circuit design). Energy is exchanged via the DC link. The specified power corresponds to the infeed power.

3) Approx. 5% of the power loss is dissipated into the atmosphere.

4) Without cooling system.

5) Figures refer to a subsystem; please refer to “Circuit designs” for the number of subsystems to be connected on the line and motor side.

Description of options

5

	Order codes for options
5/2	B00
5/3	D00 to D92 E01 to E03
5/4	E11 to E87 F03 to F97
5/5	G20 to G62
5/6	G63 to G71
5/7	K20 to K50 L08 and L21
5/8	L29 and L32
5/9	L48 to L51
5/10	L53 to L60
5/11	L80 to L87
5/12	L90 to L92
5/13	L93 and L94
5/14	L95 and L96
5/15	M10 to M34
5/16	M42 to M78
5/17	N13 to N22
5/18	N30 to N38
5/19	T58 to T91 U01 W02 to W20
5/20	Y09 to Y75

Options

To enable the required description to be found more easily, the following descriptions of options are sorted alphabetically by order codes. If an option is only available for certain converter configurations, this is indicated in brackets after the option title.

Note: An option can only be ordered once per converter, if not explicitly quoted.

B00

NAMUR terminal block

The terminal block has been configured in accordance with the requirements and guidelines of the Standards Working Group for Instrumentation and Control in the Chemical Industry (NAMUR Recommendation NE37), i.e. fixed terminals are assigned to certain functions of the devices. The inputs and outputs assigned to the terminals comply with “Protective extra-low voltage PELV” requirements.

For temperature monitoring of explosion-proof motors, options for PTC thermistors with PTB approval and PT100 evaluation units for use in areas at risk of explosion can be obtained.

This terminal block and the associated functions are reduced to the required amount. In comparison to the NAMUR recommendation, optional terminals are not listed.

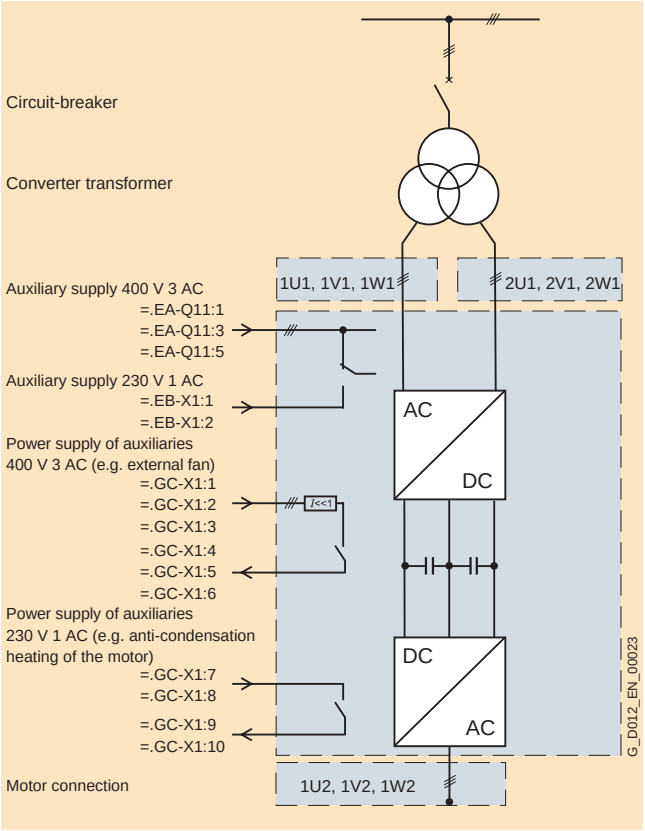

Assignment of the NAMUR terminal block

Terminal	No.	Type	Preassignment	Comment
For signal lines that must meet “Protective extra-low voltage PELV” requirements				
=.LC–X2	1 1.0 1.1	M	Reference conductor of 24 V DC supply	–
	3 3.0 3.1	P24	24 V DC supply	Protected with internal 2 A fuse
	10	DI	ON (dynamic)/ ON/OFF(static)	–
	11	DI	OFF (dynamic)	–
	12	DI	Faster	–
	13	DI	Slower	–
	14	DI	RESET	–
	15	DI	Interlock	Corresponds to OFF3
	16	DI	Counterclockwise	“0” signal for CW phase sequence “1” signal for CCW phase sequence
	17 18		Line disconnection	EMERGENCY STOP sequence
	30 31		Ready to run	Relay output (NO contact)
	32 33		Motor rotates	Relay output (NO contact)
	34	DO (NO)	Fault	Relay output (changeover contact)
	35	DO (COM)		
	36	DO (NC)		
	50 51	AI 0/4 mA to 20 mA	Speed setpoint	–
	60 61	AO 0/4 mA to 20 mA	Motor frequency	–
	62 63	AO 0/4 mA to 20 mA	Motor current	Motor current is default setting; can be reparameterized for other variables
For connecting the PTC sensor of the motor				
–A1–X3	90/91	AI	Connection of a PTC sensor	If the limit value is exceeded, a disconnection follows

If PT100 resistance thermometers are fitted in the windings of the motor in order to protect the motor, PT100 evaluation units for explosion-proof motors are available with options **L95** and **L96**.

If a forced-ventilated machine is used due to the application (load torque/control range), controlled outgoing feeders fused with motor circuit-breakers are available with options **N30** to **N33** to enable supply to an external fan. The incoming voltage supply for the external fan must be provided on the plant side.

Options **N35** to **N38** also offer a controlled and fused external voltage outgoing feeder for the anti-condensation heating in the motor.

Options (continued)

D00 to D92

Documentation

The standard documentation is supplied in English on CD-ROM. The circuit diagrams/terminal diagrams are available only in English/German.

Option	Description
D00	**Documentation in German** With order code **D00** the documentation is supplied in German on CD-ROM.
D02	**Circuit diagrams, terminal diagrams and dimension drawings in DXF format** Documents such as circuit diagrams, terminal diagrams, the arrangement diagram and the dimension drawing can be ordered with order code **D02** in DXF format, e.g. for use in AutoCAD systems.
D15	**One set of printed documentation (multiple orders possible)** If documentation is also required on paper, this must be ordered using order code **D15**.
D56	**Documentation in Russian (on request)** With order code **D56** the documentation is supplied in Russian on CD-ROM.
D72	**Documentation in Italian (on request)** With order code **D72** the documentation is supplied in Italian on CD-ROM.
D77	**Documentation in French (on request)** With order code **D77** the documentation is supplied in French on CD-ROM.
D78	**Documentation in Spanish** With order code **D78** the documentation is supplied in Spanish on CD-ROM.
D84	**Documentation in Chinese** With order code **D84** the documentation is supplied in Chinese on CD-ROM.
D92	**Documentation in Japanese (on request)** With order code **D92** the documentation is supplied in Japanese on CD-ROM.

E01

Control for separately excited synchronous motors with slip-ring excitation (for static excitation units see Accessories)

If the converter is to be used to control separately excited synchronous motors with slip-ring excitation, **E01** must be included in the order. For slip-ring excitation, the exciter cabinet with its own order number must be ordered additionally.

Note: The converter and exciter cabinet must be ordered together.

Option **E01** is available on request in connection with option **U01** (converter version for NAFTA with UL listing).

E02

Control for separately excited synchronous motors with brushless reverse field excitation (for static excitation units see Accessories)

If the converter is to be used to control separately excited synchronous motors with brushless reverse field excitation, **E02** must be included in the order. For brushless reverse field excitation, the exciter cabinet with its own order number must be ordered additionally.

Note: The converter and exciter cabinet must be ordered together.

Option **E02** is available on request in connection with option **U01** (converter version for NAFTA with UL listing).

E03

Control for permanently excited synchronous motors (SINAMICS GM150 in IGCT version and SINAMICS SM150)

If the converter is to be used to control permanently excited synchronous motors, order code **E03** must be quoted in the order.

Options (continued)

E11 to E71 (SINAMICS GM150 in water-cooled IGBT version, SINAMICS GM150 in IGCT version on request)

Individual certification of the converter by the relevant certifying organizations, including the extensions described under option M66

Option	Description
E11	**Marine version with individual certificate from Germanische Lloyd (GL)** includes option **M66**
E21	**Marine version with individual certificate from Lloyds Register (LR)** includes option **M66**
E31	**Marine version with individual certificate from Bureau Veritas (BV)** includes option **M66**, requires option **Y75** (other auxiliary voltage than 400 V 3 AC)
E51	**Marine version with individual certificate from Det Norske Veritas (DNV)** includes option **M66**
E61	**Marine version with individual certificate from the American Bureau of Shipping (ABS)** includes option **M66**
E71	**Marine version with individual certificate from the Chinese Classification Society (CCS)** includes option **M66**

Note: A combination of several individual certificates is not possible.

E86

Additional analog inputs (isolated)

With option **E86** an additional TM31 Terminal Module is available. Its analog inputs are isolated. Multi-range transformers are used (adjustment range: 0 V to 10 V; 0 mA to 20 mA or 4 mA to 20 mA).

Note: Option **E86** cannot be combined with option **G62** (second additional TM31 Terminal Module), as well as with options **L94** and **L96** (2 PT100 evaluation units).

E87

Additional analog outputs (isolated)

With option **E87** an additional TM31 Terminal Module is available. Its analog outputs are isolated. Multi-range transformers are used (adjustment range: 0 V to 10 V; 0 mA to 20 mA or 4 mA to 20 mA).

Note: Option **E87** cannot be combined with option **G62** (second additional TM31 Terminal Module).

F03, F73, F77, F97

Converter acceptance tests in presence of customer

Option	Description
F03	**Visual acceptance** The checks are carried out with the converter in the deenergized state. • The following is included in the scope of the acceptance: - Check of degree of protection - Check of equipment (components) - Check of equipment identifiers - Check of clearance and creepage distances - Check of wiring - Check of customer documentation - Submitting the acceptance report
F73	**Functional acceptance of the converter with inductive load (SINAMICS GM150 in IGBT version, others on request)** Following the visual acceptance in the deenergized state, the converter is connected to rated voltage. Rated current flows in an inductive load at an output frequency of 5 Hz (without connected motor) on the converter output side. • The following is included in the scope of the acceptance: - Visual acceptance as described for option **F03** - Test of power supplies - Check of protection and monitoring functions (simulation) - Check of fans (or cooling unit with water cooling) - Test of precharging unit - Function test with inductive load at rated voltage and rated current - Submitting the acceptance report
F77	**Acceptance of insulation test of the converter (SINAMICS GM150 in IGBT version, others on request)** • The following is included in the scope of the acceptance: - High-voltage test - Measurement of insulation resistance The insulation test can only be ordered in connection with option **F73**.
F97	**Customer-specific converter acceptance tests (on request)** If converter acceptance tests are desired which are not covered by options **F03**, **F73** or **F77**, customer-specific acceptance tests/supplementary tests can be ordered on request using order code **F97** following technical clarification.

Note: An acceptance test of static excitation units according to options **F03**, **F73**, **F77** and **F97** is only possible together with the converter which must be ordered simultaneously.

Options (continued)

G20 to G25

Connection to other bus systems (SINAMICS GM150 in IGBT version)

In the standard version the SINAMICS GM150 and SINAMICS SM150 are equipped with a PROFIBUS interface (slave). Optionally other interface modules are available on request.

Option	Description
G20	CAN bus interface (CANopen, on request)
G21	Modbus Plus interface
G22	Modbus RTU slave interface
G23	DeviceNet interface
G24	PROFINET interface (on request)
G25	Teleservice connection (on request)

G30

PROFIBUS master (SINAMICS GM150 with static excitation unit, see Accessories)

As standard SINAMICS GM150 converters can only communicate as PROFIBUS slaves. Therefore a SIMATIC CPU with PROFIBUS master capability is used in connection with a SINAMICS GM150 converter in the static excitation unit.

G61

Additional TM31 Terminal Module

One TM31 Terminal Module and two TM15 Terminal Modules for integrating alarm and fault messages as well as drive signals and for communicating with a superordinate control level are already included in the standard version of the converter. If the number of signals to be monitored is not sufficient, the interface can also be extended by an additional Terminal Module. Additional digital inputs and outputs and two analog inputs and outputs are available with the TM31.

The TM31 Terminal Module comprises:

- 8 digital inputs
- 4 bidirectional digital inputs and outputs
- 2 relay outputs with changeover contact
- 2 analog inputs
- 2 analog outputs
- 1 temperature sensor (KTY84-130 or PTC)

The following table shows an overview of the exclusions, which must be considered when selecting options **G61** or **G62**.

	G61	G62	E86	E87	L80 to L93, L95	L94, L96
G61		✓	✓	✓	–	–
G62	✓		–	–	✓	–
E86	✓	–		✓	✓	–
E87	✓	–	✓		✓	✓
L80 to L93, L95	–	✓	✓	✓		✓
L94, L96	–	–	–	✓	✓	

✓	Options can be combined
–	Options are mutually exclusive

Note: For isolated analog inputs/outputs options **E86** or **E87** are available.

TM31 Terminal Module	
Digital inputs	
• Voltage	–3 V to +30 V
• Low level (an open digital input is interpreted as "low")	–3 V to +5 V
• High level	15 V to 30 V
• Current consumption (at 24 V DC)	typ. 10 mA
• Signal propagation delays for digital inputs	L → H: approx. 50 µs H → L: approx. 100 µs
• Max. connectable cross-section	1.5 mm^2
Digital outputs (continuously short-circuit-proof)	
• Voltage	24 V DC
• Max. load current per digital output	100 mA
• Max. total current of digital outputs	400 mA
• Max. connectable cross-section	1.5 mm^2
Analog inputs (a switch is used to toggle between voltage and current input)	
• As voltage input	
- Voltage range	–10 V to +10 V
- Internal resistance R_i	100 kOhm
• As current input	
- Current range	4 mA to 20 mA/–20 mA to +20 mA/0 mA to 20 mA
- Internal resistance R_i	250 Ohm
- Resolution	11 bit + sign
• Max. connectable cross-section	1.5 mm^2
Analog outputs (continuously short-circuit-proof)	
• Voltage range	–10 V to +10 V
• Max. load current	–3 mA to +3 mA
• Current range	4 mA to 20 mA, –20 mA to +20 mA, 0 mA to 20 mA
• Max. load resistance	500 Ohm for outputs in the range –20 mA to +20 mA
• Resolution	11 bit + sign
• Max. connectable cross-section	1.5 mm^2
Relay outputs (changeover contacts)	
• Max. load current	8 A
• Max. switching voltage	250 V AC, 30 V DC
• Max. switching power (at 250 V AC)	2000 VA (cos phi = 1) 750 VA (cos phi = 0.4)
• Max. switching power (at 30 V DC)	240 W (ohmic load)
• Required minimum current	100 mA
• Max. connectable cross-section	2.5 mm^2

G62

Second additional TM31 Terminal Module

With order code **G62** a second TM31 Terminal Module can be ordered (description and exclusions under option **G61**).

Options (continued)

G63

Additional TM15 Terminal Module

One TM31 Terminal Module and one TM15 Terminal Module for integrating alarm and fault messages as well as drive signals and for communicating with a superordinate control level are already included in the standard version of the converter. The number of digital inputs and outputs can be expanded with an additional TM15 Terminal Module. This is recommended if, for instance, external signals are to be read in and processed or external components are to be controlled in addition to the standard customer's terminal block.

The TM15 Terminal Module comprises:

- 24 bidirectional digital inputs and outputs (isolation in three groups of eight channels each)
- 24 green status LEDs for indicating the logical signal status of the relevant terminal

TM15 Terminal Module	
Digital inputs	
• Voltage	–30 V to +30 V
• Low level (an open digital input is interpreted as "low")	–30 V to +5 V
• High level	15 V to 30 V
• Current consumption (at 24 V DC)	5 mA to 11 mA
• Signal propagation delays for digital inputs, typical	L → H: 50 µs H → L: 100 µs
• Max. connectable cross-section	1.5 mm^2
Digital outputs (continuously short-circuit-proof)	
• Voltage	24 V DC
• Max. load current per digital output	0.5 A
• Output delay (ohmic load)	
- standard	L → H: 50 µs H → L: 150 µs
- maximum	L → H: 100 µs H → L: 225 µs
• Max. total current of outputs (per group)	
- up to 60 °C	2 A
- up to 50 °C	3 A
- up to 40 °C	4 A
• Max. connectable cross-section	1.5 mm^2

G66

PADU8 diagnostics module (SINAMICS GM150 in IGCT version and SINAMICS SM150)

The PADU8 diagnostics module reads out up to eight analog signals and up to eight digital signals from the power stack adapter of the power section and makes these available for diagnostics purposes or for further processing. The typical detection cycle of all channels in parallel is 1 ms, enabling rapid signal characteristics to be detected and diagnosed simultaneously. The detected values are transferred to an evaluation system (e.g. notebook) either by fiber-optic conductors or by an RJ11 socket. All output data are available in parallel at the fiber-optic conductor output and at the RJ11 socket. This means that measurements can be taken in parallel at the RJ11 socket without disrupting the transfer of data at the fiber-optic conductor. With option **G66** a PADU8 diagnostics module is integrated in the control section of each Motor Module.

G70

Pulse distributor for forwarding the speed encoder signal (SINAMICS SM150)

With this pulse distributor it is possible to split the encoder signal. This possibility is used, for example, when actual speed values from an HTL incremental encoder are required at various points for measured-value acquisition and processing.

The pulse distributor transfers the HTL incremental encoder signals to two separate RS 422 signal outputs. The inputs are electrically isolated from the outputs.

8-pole terminal blocks are used for the connection.

G71

Optical bus terminal (OBT) for PROFIBUS (SINAMICS SM150)

The PROFIBUS OBT is a network component for use in optical PROFIBUS DP fieldbus networks. The individual bus stations are linked using two-phase plastic fiber-optic conductors, resulting automatically in isolation and preventing potential differences in large plants from having any impact.

The OBT has three interfaces:
Channel 1 is an electric RS 485 interface which is configured as a 9-pole Sub D socket and establishes the link to the converter control.
Channels 2 and 3 form the optical interface. They are configured as a duplex socket and can be used for connection on the plant side to superordinate systems.

Options (continued)

K20

Signal lamps and start/stop button in the cabinet door

With option **K20**, five signal lamps that display the operating status of the converter are provided in the cabinet door of the control section.

- Fault (red)
- Alarm (yellow)
- Operation (green)
- Drive ready (white)
- Local operation (white)

Additionally a start button (green) and a stop button (red) are installed in the cabinet door if option **K20** is selected. During remote operation these pushbuttons can be used to switch the drive ON and OFF. During local operation from AOP30 these pushbuttons are not active.

K21

Display instruments in the cabinet door for voltage, current, speed and power also including signal lamps and start/stop button

For display of process variables, analog display instruments are installed in the cabinet door indicating the measured value in %:

- Motor current (0 to +120%)
- Motor speed (–120% ... 0 ... +120%)
- Calculated motor power (0 to +120%)
- Motor voltage (0 to +120%)

Note: Option **K21** includes option **K20**.

K22

Display instruments in the cabinet door for current, speed, power and winding temperature also including signal lamps and start/stop button

For display of process variables, analog display instruments are installed in the cabinet door indicating the measured value in %:

- Motor current (0 to +120%)
- Motor speed (–120% ... 0 ... +120%)
- Calculated motor power (0 to +120%)
- Motor winding temperature (0 to 200 °C)

Note: Option **K22** includes option **K20**.

K50

SMC30 Sensor Module Cabinet-Mounted (SINAMICS GM150, standard for SINAMICS SM150)

The SMC30 Sensor Module Cabinet-Mounted can be used to detect the actual motor speed. The signals emitted by the rotary pulse encoder are converted here and made available via the DRIVE-CLiQ interface of the closed-loop control for evaluation purposes.

The following encoders are supported by the SMC30:

- TTL encoders
- HTL encoders

The max. connectable conductor cross-section is 20 mm^2.

L08

Output reactor

The output reactor is used to limit the capacitive re-charging currents of motor cables. Depending on the configuration of the power section (IGBT or IGCT technology) different cable lengths apply.

Converter	Max. cable lengths			
	without output reactor (standard)		with output reactor [1] (option **L08**)	
	shielded	unshielded	shielded	unshielded
Output voltage 2.3 kV to 6.6 kV				
SINAMICS GM150 IGBT version	up to 2 parallel cables: 100 m 3 parallel cables: 80 m > 3 parallel cables: not permitted	not permitted	1000 m	not permitted [2]
Output voltage 3.3 kV				
SINAMICS GM150 IGCT version	up to 2 parallel cables: 100 m 3 parallel cables: on request 4 parallel cables: on request	not permitted	500 m	not permitted
SINAMICS SM150	up to 2 parallel cables: 50 m 3 parallel cables: on request 4 parallel cables: on request	not permitted	200 m	not permitted

The output reactor is located in an additional cabinet.

L21

Overvoltage protection AC (static excitation unit, see Accessories)

Option **L21** provides an integrated overvoltage protection on the input side of type SICROWBAR.

1) Distance from converter to motor according to current load for max. 6 parallel three-wire EMC cables.

2) A sine-wave filter (option **Y15**) must be provided if unshielded motor cables are used.

Options (continued)

L29

Bidirectional synchronized bypass operation (SINAMICS GM150 in IGBT version with induction motor)

Option **L29** offers synchronization with seamless transfer of the motor to the line and take-over of the motor from the line.

The converter synchronizes the motor to the supply voltage (phase relation, frequency and amplitude). The motor is subsequently connected in parallel to the line with the S3 circuit-breaker before the output-side S2 circuit-breaker opens.

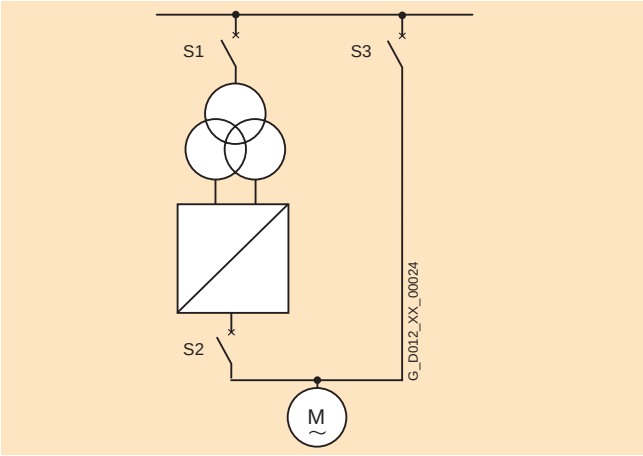

Approx. 100 ms pass under consideration of the response time constants of the two circuit-breakers (opening and closing times). Within this period of time the motor is transferred from the converter to the line. This ensures a bumpless transfer of the motor to the line.

If the motor is to be subsequently taken from the line and operated via the converter again, the transfer process is executed in reverse order. The converter is first run up in no-load operation and its output voltage is synchronized to the line voltage in its phase relation, frequency and amplitude. Then circuit-breaker S2 is closed before S3 is opened and the motor is isolated from the line.

In this case the motor is taken over bumplessly by the converter and can either be operated under speed control or shut down under control. Variable speed operation during running up and shutting down does not produce any high starting and transient torques that could damage the drive train or cause e.g. pressure fluctuations in the process.

With option **L29** a VSM10 Voltage Sensing Module is integrated into the converter. The VSM10 detects the line voltage in phase relation, frequency and amplitude, utilizing a voltage transformer that has to be installed on the primary side of the S1 circuit-breaker (plant-side). It thus supplies the data for synchronization of the motor to the line and from the line to the converter. The converter control outputs the drive signals of the two circuit-breakers to be provided on the plant side.

Option **L08** (output reactor) or option **Y15** (sine-wave filter) is additionally required for the decoupling of the converter output during the commutation process.

The S3 circuit-breaker must be configured to protect the motor against overcurrents and overvoltages during line operation. If temperature sensors are fitted in the motor, these must be monitored independently (plant-side) during line operation.

Attention: Option **L29** is only possible if the converter output voltage is the same as the line voltage.

L32

Automatic restart

Option **L32** enables the converter to be restarted after a power failure once the line supply has been restored.

If such a restart is required for technical reasons, the following conditions must be taken into consideration.

The 400 V 3 AC and 230 V 1 AC auxiliary supplies must not fail, so that the voltage supply to the fans and coolant pumps as well as the control is maintained.

If the main supply fails, pulses are blocked and the DC link voltage is sustained by the precharging unit for a short period. It is important to distinguish between two cases here:

Case A:

The circuit-breaker on the input side is still switched on.

If the main supply returns, the DC link voltage rises. This is detected by the closed-loop control and the controller and operation is resumed when a threshold value is exceeded.

Case B:

The circuit-breaker on the input side has switched off.

After a fixed, parameterizable time, the circuit-breaker receives an “ON command”. The response of the DC link voltage is then analyzed.

If the DC link voltage continues to fall, the converter is shut down.

If the DC link voltage rises, operation is resumed when a threshold value is exceeded.

Depending on the downtime, load characteristic and moment of inertia, the drive may be “caught” again or the machine may need to be “excited” again first before operation can be resumed.

With option **L32** a VSM10 Voltage Sensing Module is integrated into the converter. The VSM10 detects the line voltage in phase relation, frequency and amplitude, utilizing a voltage transformer that has to be installed on the primary side of the S1 circuit-breaker (plant-side). This enables the controller and closed-loop control to detect when the main supply returns after a power failure if the circuit-breaker on the input side has dropped out.

For safety reasons, a time limit is built in between the power failure and the maximum permitted line restoration time so that the drive cannot start up again uncontrolled.

A signal is issued in addition when restarting that can be used to generate an acoustic warning.

Options (continued)

L48

Grounding switch at converter input (motor-operated)

If grounding on the line side is required for safety and protection reasons, a motor-operated grounding switch can be ordered with order code **L48**. The number of grounding switches depends on the configuration of the line supply (12-/24-pulse for SINAMICS GM150 or 6-pulse for SINAMICS SM150).

For safety reasons, the converter controller locks these grounding switches against activation while voltage is still present. The control is integrated into the protection and monitoring chain of the converter. The grounding switches are inserted automatically when the standard grounding switches of the DC link are inserted.

In the event of maintenance work on the converter, it must be ensured on the plant side that there is no external voltage present, e.g. auxiliary voltage for fans, the cooling system, controller and closed-loop control and any external outputs in the converter.

Attention: Option **L48** increases the width of the cabinet as follows:

- SINAMICS GM150 in IGBT version: 600 mm
- SINAMICS GM150 in IGCT version and SINAMICS SM150: 700 mm

Note: Option **L48** is available on request in connection with option **U01** (converter version for NAFTA with UL listing).

L49

Grounding switch at converter output (motor-operated)

With certain operating modes/configurations of the load machine (e.g. drive group with gas turbines) or types of drive machine (e.g. PEM), there can be operating statuses at which there is a risk that energy will be fed back into the converter from the motor. This can lead to dangerous voltages. In these cases a motor-operated grounding switch for the converter output side can be ordered with order code **L49**. Where power sections are connected in parallel, the number of circuit-breakers will rise accordingly.

For safety reasons, the converter controller locks the grounding switch against activation while voltage is still present. The control is integrated into the protection and monitoring chain of the converter. The grounding switches are inserted automatically when the standard grounding switches of the DC link are inserted.

Attention: Option **L49** increases the width of the cabinet as follows:

- SINAMICS GM150 in IGBT version: 600 mm
- SINAMICS GM150 in IGCT version and SINAMICS SM150: 700 mm

Note: Option **L49** is available on request in connection with option **U01** (converter version for NAFTA with UL listing).

L50

Cabinet lighting and service socket outlet in control section

If option **L50** is chosen, a universal lamp and a service socket outlet (Schuko version) are installed respectively in the cabinet panels of the control sections for Motor Modules and Active Line Modules.

The voltage supply for the cabinet lighting and service socket outlet (on terminal block =.EG-X1) is provided externally. The cabinet lighting is switched on manually via a switch or automatically by an integrated motion detector. The mode is switch-selected.

Terminal	Meaning
=.EG–X1:1	L1 (230 V)
=.EG–X1:2	N

Note: In connection with option **U01** (converter version for NAFTA with UL listing), option **L50** is configured with supply voltage 120 V. In this case the service socket outlet corresponds to the version for the USA.

L51

Disconnector at converter output (SINAMICS GM150 in IGCT version and SINAMICS SM150)

If a disconnection between the converter output and the drive motor is required for safety and protection reasons, a motor-operated disconnector at the converter output can be ordered with order code **L51**.

Attention: Option **L51** increases the width of the cabinet of each converter unit by 700 mm.

Options (continued)

L53

UPS for power supply of control (SINAMICS GM150)

If there is a danger of voltage dips and short-time power failures on the plant, the drive can continue to be operated if the control is supplied by a UPS, provided that the DC link voltage does not fall below the $V_{d\ min}$ limit. Another prerequisite is that the circuit-breaker does not switch off because of the undervoltage. This enables the drive to withstand voltage dips to short power failures, particularly when the motor has a large inertia and kinetic buffering of the DC link can be used.

In the case of interruptions that lead to disconnection of the power section, the down time is reduced using the function automatic restart (option **L32**). The UPS is configured for a buffer time of up to 10 min.

Note: In connection with option **U01** (converter version for NAFTA with UL listing), option **L53** is available on special request.

L55

Anti-condensation heating for cabinet

The anti-condensation heating is recommended at low ambient temperatures and high levels of humidity to prevent condensation. The number of 100 W switch cabinet heaters fitted depends on the number of cabinet panels. The anti-condensation heaters are controlled with a thermostat. Should the external auxiliary supply fail, this is monitored and reported by the converter for safety reasons.

The supply voltage for the anti-condensation heating (110 V to 240 V AC, on terminal block =.GB–X1:) must be supplied externally.

Terminal	Meaning
=.GB–X1:1	N
=.GB–X1:2	L1 (110 V to 240 V)

L60

EMERGENCY STOP category 1

EMERGENCY STOP category 1 (24 V DC) for controlled shutdown in accordance with EN 60204-1/VDE 0113 T1 (IEC 60204-1).

EMERGENCY STOP category 0 is set as standard for an uncontrolled shutdown. The function includes voltage disconnection of the converter output through the circuit-breaker. Consequently the motor coasts down.

The EMERGENCY STOP category 1 function includes rapid shutdown of the drive through a fast stop using a ramp-down ramp to be parameterized by the user. This is followed by voltage disconnection as described for EMERGENCY STOP category 0. The EMERGENCY STOP button with protective collar is fitted in the converter cabinet door and its contacts are connected in parallel to the terminal block so that they can be integrated in parallel in a protection concept on the plant side. (terminal block =.LA–X51:1A or 1C and =.LA–X51:2A or 2C)

Attention: On activation of the EMERGENCY STOP button, the motor is shut down uncontrolled or controlled and the main voltage on the motor is disconnected depending on either selecting category 0 or 1. Auxiliary voltages such as for the supply of external fans or anti-condensation heating, may still be present. Certain areas within the converter such as the control or auxiliaries, also remain under voltage. If all voltages have to be completely disconnected, the EMERGENCY STOP button must be integrated into a protection concept on the plant side. Therefore a NC contact is available on terminal =.LA–X51:1A and =.LA–X51:2A.

Attention: The braking process can take considerable time even with an EMERGENCY STOP category 1. This depends on the one hand on the moment of inertia of the load and on the other hand on whether the power section on the line side is an Active Line Module (SINAMICS SM150) or a Basic Line Module (SINAMICS GM150).

Options (continued)

L80

2 thermistor protection relays for alarm and fault

Option **L80** offers two thermistor protection relays (with PTB approval) for PTC thermistors (type A) for alarm and disconnection. The power supply for the relay and the evaluation is provided within the converter.

An additional TM31 Terminal Module is integrated as interface for further processing and display of the signals.

Note: Option **L80** cannot be combined with option **G61** (additional TM31 Terminal Module).

Terminal	Meaning (alarm)
=.LF–A11:T1	Connection of sensor loop
=.LF–A11:T2	Connection of sensor loop

Terminal	Meaning (disconnection)
=.LF–A12:T1	Connection of sensor loop
=.LF–A12:T2	Connection of sensor loop

L81

2 x 2 thermistor protection relays for alarm and fault

Option **L81** offers four thermistor protection relays (with PTB approval) for PTC thermistors (type A) for alarm and disconnection. The power supply for the relay and the evaluation is provided within the converter.

An additional TM31 Terminal Module is integrated as interface for further processing and display of the signals.

Note: Option **L81** cannot be combined with option **G61** (additional TM31 Terminal Module).

Terminal	Meaning (alarm)
=.LF–A11:T1	Connection of sensor loop
=.LF–A11:T2	Connection of sensor loop

Terminal	Meaning (disconnection)
=.LF–A12:T1	Connection of sensor loop
=.LF–A12:T2	Connection of sensor loop

Terminal	Meaning (alarm)
=.LF–A21:T1	Connection of sensor loop
=.LF–A21:T2	Connection of sensor loop

Terminal	Meaning (disconnection)
=.LF–A22:T1	Connection of sensor loop
=.LF–A22:T2	Connection of sensor loop

L82

3 x 2 thermistor protection relays for alarm and fault

Option **L82** offers six thermistor protection relays (with PTB approval) for PTC thermistors (type A) for alarm and disconnection. The power supply for the relay and the evaluation is provided within the converter.

An additional TM31 Terminal Module is integrated as interface for further processing and display of the signals.

Note: Option **L82** cannot be combined with option **G61** (additional TM31 Terminal Module).

Terminal	Meaning (alarm)
=.LF–A11:T1	Connection of sensor loop
=.LF–A11:T2	Connection of sensor loop

Terminal	Meaning (disconnection)
=.LF–A12:T1	Connection of sensor loop
=.LF–A12:T2	Connection of sensor loop

Terminal	Meaning (alarm)
=.LF–A21:T1	Connection of sensor loop
=.LF–A21:T2	Connection of sensor loop

Terminal	Meaning (disconnection)
=.LF–A22:T1	Connection of sensor loop
=.LF–A22:T2	Connection of sensor loop

Terminal	Meaning (alarm)
=.LF–A31:T1	Connection of sensor loop
=.LF–A31:T2	Connection of sensor loop

Terminal	Meaning (disconnection)
=.LF–A32:T1	Connection of sensor loop
=.LF–A32:T2	Connection of sensor loop

L87

Rotor ground-fault monitoring (static excitation unit, see Accessories)

Option **L87** provides integrated ground-fault monitoring for the rotor circuit.

Options (continued)

L90

PT100 evaluation unit with 3 inputs

The PT100 evaluation unit can monitor up to three sensors. The sensors can be connected using a two-wire or three-wire system. For all three sensors, the limits for alarm and disconnection must be set centrally.

The output relays are integrated into the internal fault and shutdown sequence of the converter.

An additional TM31 Terminal Module is integrated as interface for further processing and display of the signals.

Note: Option **L90** cannot be combined with option **G61** (additional TM31 Terminal Module).

Terminal	Meaning
=.LJ–A11:1T1 to 1T3	PT100; sensor 1
=.LJ–A11:2T1 to 2T3	PT100; sensor 2
=.LJ–A11:3T1 to 3T3	PT100; sensor 3

In a two-wire system inputs xT1 and xT2 must be assigned and a bridge inserted between terminals xT2 and xT3.

L91

2 PT100 evaluation units with 3 inputs each

Each PT100 evaluation unit can monitor up to three sensors. For all three sensors, the limits for alarm and disconnection must be set centrally.

The output relays are integrated into the internal fault and shutdown sequence of the converter.

An additional TM31 Terminal Module is integrated as interface for further processing and display of the signals.

Note: Option **L91** cannot be combined with option **G61** (additional TM31 Terminal Module).

Terminal	Meaning
=.LJ–A11:1T1 to 1T3	PT100; sensor 1
=.LJ–A11:2T1 to 2T3	PT100; sensor 2
=.LJ–A11:3T1 to 3T3	PT100; sensor 3

Terminal	Meaning
=.LJ–A12:1T1 to 1T3	PT100; sensor 1
=.LJ–A12:2T1 to 2T3	PT100; sensor 2
=.LJ–A12:3T1 to 3T3	PT100; sensor 3

The sensors can be connected using a two-wire or three-wire system. In a two-wire system inputs xT1 and xT2 must be assigned and a bridge inserted between terminals xT2 and xT3.

L92

3 PT100 evaluation units each with 3 inputs (SINAMICS GM150 in IGCT version and SINAMICS SM150)

Each PT100 evaluation unit can monitor up to three sensors. For all three sensors, the limits for alarm and disconnection must be set centrally.

The output relays are integrated into the internal fault and shutdown sequence of the converter.

An additional TM31 Terminal Module is integrated as interface for further processing and display of the signals.

Note: Option **L92** cannot be combined with option **G61** (additional TM31 Terminal Module).

Terminal	Meaning
=.LJ–A11:1T1 to 1T3	PT100; sensor 1
=.LJ–A11:2T1 to 2T3	PT100; sensor 2
=.LJ–A11:3T1 to 3T3	PT100; sensor 3

Terminal	Meaning
=.LJ–A12:1T1 to 1T3	PT100; sensor 1
=.LJ–A12:2T1 to 2T3	PT100; sensor 2
=.LJ–A12:3T1 to 3T3	PT100; sensor 3

Terminal	Meaning
=.LJ–A21:1T1 to 1T3	PT100; sensor 1
=.LJ–A21:2T1 to 2T3	PT100; sensor 2
=.LJ–A21:3T1 to 3T3	PT100; sensor 3

The sensors can be connected using a two-wire or three-wire system. In a two-wire system inputs xT1 and xT2 must be assigned and a bridge inserted between terminals xT2 and xT3.

Options (continued)

L93

PT100 evaluation unit with 6 inputs and 2 analog outputs (outputs for display connected to control)

The PT100 evaluation unit can monitor up to six sensors. The limit values can be programmed by the user for each channel.

In the standard setting, the measuring channels are divided into two groups of three channels each. With motors, for example, three PT100 can be monitored in the stator windings and two PT100 in the motor bearings. Channels that are not used can be suppressed using appropriate parameter settings.

The output relays are integrated into the internal fault and shut-down sequence of the converter. Additionally two freely programmable analog outputs (0/4 mA to 20 mA and 0/2 V to 10 V) are available.

An additional TM31 Terminal Module is integrated as interface for further processing and display of the signals.

Note: Option **L93** cannot be combined with option **G61** (additional TM31 Terminal Module).

Terminal	Meaning
=.LG–A11:T11 to T13	PT100; sensor 1; group 1
=.LG–A11:T21 to T23	PT100; sensor 2; group 1
=.LG–A11:T31 to T33	PT100; sensor 3; group 1
=.LG–A11:T41 to T43	PT100; sensor 1; group 2
=.LG–A11:T51 to T53	PT100; sensor 2; group 2
=.LG–A11:T61 to T63	PT100; sensor 3; group 2
The sensors can be connected to the PT100 evaluation unit using both a two-wire or three-wire system. In a two-wire system inputs Tx1 and Tx3 must be assigned. In a three-wire system, input Tx2 must also be connected (x = 1, 2 , ..., 6).	
=.LG–A11:11/12/14	Relay output limit for group 1 reached (alarm); changeover contact
=.LG–A11:21/22/24	Relay output limit for group 1 reached (fault); changeover contact
=.LG–A11:T1 (OUT 1)	Analog output OUT 1; sensor group 1
=.LG–A11:I1 (OUT 1)	Analog output OUT 1; sensor group 1
=.LG–A11:31/32/34	Relay output limit for group 2 reached (alarm); changeover contact
=.LG–A11:41/42/44	Relay output limit for group 2 reached (fault); changeover contact
=.LG–A11:T2 (OUT 2)	Analog output OUT 2; sensor group 2
=.LG–A11:I2 (OUT 2)	Analog output OUT 2; sensor group 2

L94

2 PT100 evaluation units each with 6 inputs and 2 analog outputs (outputs for display connected to control; SINAMICS GM150 in IGCT version and SINAMICS SM150)

Option **L94** offers two PT100 evaluation units as described under option **L93**, enabling up to 12 sensors in total to be monitored.

Two additional TM31 Terminal Modules are integrated as interfaces for further processing and display of the signals and analog outputs.

Note: Option **L94** cannot be combined with options **G61** and **G62** (additional TM31 Terminal Modules), as well as with option **E86** (additional analog inputs).

Terminal	Meaning
=.LG–A11:T11 to T13	PT100; sensor 1; group 1
=.LG–A11:T21 to T23	PT100; sensor 2; group 1
=.LG–A11:T31 to T33	PT100; sensor 3; group 1
=.LG–A11:T41 to T43	PT100; sensor 1; group 2
=.LG–A11:T51 to T53	PT100; sensor 2; group 2
=.LG–A11:T61 to T63	PT100; sensor 3; group 2
The sensors can be connected to the PT100 evaluation unit using both a two-wire or three-wire system. In a two-wire system inputs Tx1 and Tx3 must be assigned. In a three-wire system, input Tx2 must also be connected (x = 1, 2 , ..., 6).	
=.LG–A11:11/12/14	Relay output limit for group 1 reached (alarm); changeover contact
=.LG–A11:21/22/24	Relay output limit for group 1 reached (fault); changeover contact
=.LG–A11:T1 (OUT 1)	Analog output OUT 1; sensor group 1
=.LG–A11:I1 (OUT 1)	Analog output OUT 1; sensor group 1
=.LG–A11:31/32/34	Relay output limit for group 2 reached (alarm); changeover contact
=.LG–A11:41/42/44	Relay output limit for group 2 reached (fault); changeover contact
=.LG–A11:T2 (OUT 2)	Analog output OUT 2; sensor group 2
=.LG–A11:I2 (OUT 2)	Analog output OUT 2; sensor group 2

Terminal	Meaning
=.LG–A21:T11 to T13	PT100; sensor 1; group 3
=.LG–A21:T21 to T23	PT100; sensor 2; group 3
=.LG–A21:T31 to T33	PT100; sensor 3; group 3
=.LG–A21:T41 to T43	PT100; sensor 1; group 4
=.LG–A21:T51 to T53	PT100; sensor 2; group 4
=.LG–A21:T61 to T63	PT100; sensor 3; group 4
The sensors can be connected to the PT100 evaluation unit using both a two-wire or three-wire system. In a two-wire system inputs Tx1 and Tx3 must be assigned. In a three-wire system, input Tx2 must also be connected (x = 1, 2 , ..., 6).	
=.LG–A21:11/12/14	Relay output limit for group 3 reached (alarm); changeover contact
=.LG–A21:21/22/24	Relay output limit for group 3 reached (fault); changeover contact
=.LG–A21:T1 (OUT 1)	Analog output OUT 1; sensor group 3
=.LG–A21:I1 (OUT 1)	Analog output OUT 1; sensor group 3
=.LG–A21:31/32/34	Relay output limit for group 4 reached (alarm); changeover contact
=.LG–A21:41/42/44	Relay output limit for group 4 reached (fault); changeover contact
=.LG–A21:T2 (OUT 2)	Analog output OUT 2; sensor group 4
=.LG–A21:I2 (OUT 2)	Analog output OUT 2; sensor group 4

Options (continued)

L95

PT100 evaluation unit with 6 inputs for explosion-proof motors and 2 analog outputs (outputs for display connected to control)

Six evaluation units are available for use in explosion-proof motors Zone 2, Zone 22 (non-conductive dusts) Div. 2 and safe areas (inherently safe input: [EEx ia] IIC). The resistance thermometers (PT100, PT500, PT1000) can be operated in a two-wire, three-wire or four-wire system. The six evaluation units are arranged in two groups of three units each. For each group the alarm and fault messages are combined together and integrated into the alarm and fault reporting chain of the converter. Furthermore, a temperature measured value is led to an analog input of the converter in each group so that it is available to the converter control for measurement and display purposes.

An additional TM31 Terminal Module is integrated as interface for further processing and display of the signals.

Note: Option **L95** cannot be combined with option **G61** (additional TM31 Terminal Module), as well as with option **U01** (converter version for NAFTA with UL listing).

Terminal	Meaning
=.LH–A11:10/11/12/14	PT100; sensor 1; group 1
=.LH–A12:10/11/12/14	PT100; sensor 2; group 1
=.LH–A13:10/11/12/14	PT100; sensor 3; group 1

Terminal	Meaning
=.LH–A21:10/11/12/14	PT100; sensor 1; group 1
=.LH–A22:10/11/12/14	PT100; sensor 2; group 1
=.LH–A23:10/11/12/14	PT100; sensor 3; group 1

The sensors can be connected to the PT100 evaluation unit in either a two-wire, three-wire or four-wire system.
In a two-wire system the inputs 10 and 12 must be connected, in a three-wire system the inputs 10, 11 and 12 and in a four-wire system the inputs 10, 11, 12 and 14 must be connected.
Parameterization is done using software.

L96

2 PT100 evaluation units each with 6 inputs for explosion-proof motors and 2 analog outputs (outputs for display connected to control; SINAMICS GM150 in IGCT version and SINAMICS SM150)

Two times six evaluation units are available for use in explosion-proof motors Zone 2, Zone 22 (non-conductive dusts) Div. 2 and safe areas (inherently safe input: [EEx ia] IIC). The resistance thermometers (PT100, PT500, PT1000) can be operated in a two-wire, three-wire or four-wire system. The evaluation units are arranged in groups of three units each. For each group the alarm and disconnection messages are arranged together and integrated into the alarm and fault reporting chain of the converter. Furthermore, a temperature measured value is led to an analog input of the converter in each group so that it is available to the converter control for measurement and display purposes.

Two additional TM31 Terminal Modules are integrated as interfaces for further processing and display of the signals and analog outputs.

Note: Option **L96** cannot be combined with options **G61** and **G62** (additional TM31 Terminal Modules), as well as with option **E86** (additional analog inputs).

Terminal	Meaning
=.LH–A11:10/11/12/14	PT100; sensor 1; group 1
=.LH–A12:10/11/12/14	PT100; sensor 2; group 1
=.LH–A13:10/11/12/14	PT100; sensor 3; group 1

Terminal	Meaning
=.LH–A21:10/11/12/14	PT100; sensor 1; group 1
=.LH–A22:10/11/12/14	PT100; sensor 2; group 1
=.LH–A23:10/11/12/14	PT100; sensor 3; group 1

Terminal	Meaning
=.LH–A31:10/11/12/14	PT100; sensor 1; group 1
=.LH–A32:10/11/12/14	PT100; sensor 2; group 1
=.LH–A33:10/11/12/14	PT100; sensor 3; group 1

Terminal	Meaning
=.LH–A41:10/11/12/14	PT100; sensor 1; group 1
=.LH–A42:10/11/12/14	PT100; sensor 2; group 1
=.LH–A43:10/11/12/14	PT100; sensor 3; group 1

The sensors can be connected to the PT100 evaluation unit in either a two-wire, three-wire or four-wire system.
In a two-wire system the inputs 10 and 12 must be connected, in a three-wire system the inputs 10, 11 and 12 and in a four-wire system the inputs 10, 11, 12 and 14 must be connected.
Parameterization is done using software.

Options (continued)

M10

Safety closing/interlocking system

The safety closing/interlocking system is based on the key transfer system from Castell and is used in addition to the electromagnetic door locking system provided as standard. To obtain the coded key of the key exchange unit, the circuit-breaker must first be opened. The opened circuit-breaker releases the key to the key exchange unit, which in turn releases the keys to the converter cabinet doors of the power section. This ensures that the converter is isolated from the medium voltage and that the medium voltage is no longer present in the cabinet. As long as the cabinet doors are not closed again and the keys of the converter cabinet doors are not put back into the key exchange unit, the key for the medium voltage switch will not be released and the medium voltage switch cannot be activated again.

M11

Dust protection (SINAMICS GM150, air-cooled)

With option **M11** the cabinet doors are fitted with additional filter mats to prevent the ingress of dangerous dust deposits on the power section components. The filter mats are fitted to the outside of the cabinet doors, which means that they can be replaced during operation.

The amount of dust in the filter mats is determined constantly by a differential pressure monitor. A maintenance request is issued in plenty of time before the filter mats get clogged up.

When replacing the filter mats, it must be ensured that no dust gets into the cabinet through the air pulled in by the cabinet fans as they run.

M13

Connection of power cables to converter input from top (SINAMICS GM150 in IGBT version)

Given suitable installation conditions, option **M13** enables the line-side power cables to be introduced into the cabinet from top.

Attention: Option **M13** increases the width of the cabinet by 600 mm. If option **Y15** (sine-wave filter) is selected simultaneously, no increase of the width is necessary; then the dimensions given in the technical data sections apply.

M32

Customer's terminal block with cage clamp terminals for signal cables up to 2.5 mm^2

The signal cable is normally connected directly to the terminals of the TM31 or TM15 Terminal Modules. The maximum connectable cross-section for TM31 and TM15 is limited to 1.5 mm^2.

With option **M32**, the signals are led out to a terminal block where connection takes place via cage clamp terminals. In this case connection cross-sections of up to 2.5 mm^2 are permitted.

Note: It is not possible to lead out the signals of additional Terminal Modules (options **G61**, **G62** and **L80** to **L96**).

M33

Customer's terminal block with screw terminals for signal cables up to 2.5 mm^2

The signal cable is normally connected directly to the terminals of the TM31 or TM15 Terminal Modules. The maximum connectable cross-section for TM31 and TM15 is limited to 1.5 mm^2.

With option **M33**, the signals are led out to a terminal block where connection takes place via screw terminals. In this case connection cross-sections of up to 2.5 mm^2 are permitted.

Note: It is not possible to lead out the signals of additional Terminal Modules (options **G61**, **G62** and **L80** to **L96**).

M34

Connection of auxiliary voltage and signal cables from top (SINAMICS GM150 in IGBT version)

Given suitable installation conditions, option **M34** enables the auxiliary supply and the signal cables to be introduced into the cabinet from top.

Options (continued)

M42

IP42 degree of protection (SINAMICS GM150 in air-cooled IGBT version)

With option **M42**, the degree of protection of the air-cooled converters can be enhanced (IP22 is standard). Additional fine-meshed grilles where the air comes in and goes out prevent the ingress of solid matter with diameters > 1.0 mm.

M54

IP54 degree of protection (SINAMICS GM150 in water-cooled IGBT version)

With option **M54**, the degree of protection of the water-cooled converters can be enhanced (IP43 is standard). Losses within the cabinet that cannot be dissipated directly through the coolant (thermal radiation) are dissipated by an additional internal air circuit with an air-water heat exchanger.

M61

Redundant fan in power section (SINAMICS GM150, air-cooled)

To improve system availability, it is possible to equip the converter with an additional redundantly operating fan. If a fan within the converter cabinet fails, this is immediately detected by the differential pressure in the cabinet and the redundant fan is activated by the converter control without the converter and hence the drive system tripping. This enables production down times or interruptions to be avoided and replacement of the faulty fan to be postponed until the next scheduled shutdown.

M64

Converter prepared for connection to an external exhaust air system, with internal cabinet fans (SINAMICS GM150, air-cooled)

Retaining the internal cabinet fans ensures that the volume of cool air required for cooling can be supplied without the risk of air distribution problems. If the exhaust air is led in a duct system over long sections or even around bends, the pressure drop that arises in this duct system must be compensated by additional fans within the exhaust air system. Suitable “flange connections” for connecting the converter to an external exhaust air system are located in the roof part of the cabinet.

M66

Marine version with type certificate (SINAMICS GM150, water-cooled)

With option **M66**, the version of the converter meets the requirements of the following classification organizations:

- Lloyds Register
- American Bureau of Shipping
- Germanischer Lloyd
- Bureau Veritas
- Det Norske Veritas
- Chinese Classification Society.

Option **M66** includes a strengthened mechanical version of the cabinet, handrails below the operator panel and a mechanical locking of the cabinet doors. The cabinet is provided in the IP44 degree of protection and includes a cabinet anti-condensation heating (option **L55**). It is supplied with a strengthened base frame which can be welded to the ship floor to ensure that the converter is securely located.

Note: The strengthened base frame increases the height of the converter by 100 mm.

Note: If the converter is used for a safety-relevant (“essential service”) drive on the ship, individual certification is required in addition (see options **E11** to **E71**).

M78

Connection of power cables to converter output from top (SINAMICS GM150 as IGBT version)

Given suitable installation conditions, option **M78** enables the motor-side power cables to be introduced into the cabinet from top. Option **M78** includes option **M13** (connection of power cables to converter input from top).

Attention: Option **M78** increases the width of the cabinet by 600 mm. If option **Y15** (sine-wave filter) is selected simultaneously, no increase of the width is necessary; then the dimensions given in the technical data sections apply.

Options (continued)

N13

Circuit-breaker at converter input (SINAMICS GM150 as IGBT version; IGCT version on request)

Option **N13** provides integrated circuit-breakers. Option **N13** is particularly important in the retrofit business where existing circuit-breakers do not meet requirements (tripping times, undervoltage coil). The circuit-breakers are installed below the Basic Line Module in the converter cabinet and are thus located on the secondary side of the line-side transformer.

Note: In connection with option **U01** (converter version for NAFTA with UL listing), option **N13** is available on special request.

N15

24-pulse Basic Line Module (SINAMICS GM150)

For particularly high requirements regarding low line harmonic distortions, the power sections of voltage ranges 2.3 kV, 3.3 kV and 4.16 kV can be supplied with a 24-pulse Basic Line Module.

Converters of higher power ranges with power sections connected in parallel and converters of voltage ranges 6.0 kV and 6.6 kV can be operated with a 24-pulse configuration without the need to select option **N15**. The converter transformer required at the medium-voltage level must be designed as a five-winding transformer, or else two two-tier transformers must be provided. Vector groups and winding displacements must be engineered accordingly.

Attention: With option **N15** the width of the converter cabinet for SINAMICS GM150 in IGBT version increases by 600 mm.

N20

Capacitor trip device 110 V to 120 V DC (SINAMICS GM150 as IGBT version)

The capacitor trip device is used if the existing circuit-breaker has no undervoltage coil and cannot be retrofitted with one.

It is installed in the converter and has the following functions:

- Monitoring of the auxiliary voltage supply of the circuit-breaker on the plant side
- Monitoring of the own internal voltage supply
- Locking of the circuit-breaker in the OFF position if there is insufficient voltage

The capacitor trip device ensures that the circuit-breaker on the plant side can still be safely disconnected even if there is a power failure or the normal OFF command is not effective, e.g. because of a wire break.

Note: Option **N20** cannot be combined with option **U01** (converter version for NAFTA with UL listing).

N21

Capacitor trip device 230 V DC (SINAMICS GM150 as IGBT version)

The capacitor trip device is used if the existing circuit-breaker has no undervoltage coil and cannot be retrofitted with one.

It is installed in the converter and has the following functions:

- Monitoring of the auxiliary voltage supply of the circuit-breaker on the plant side
- Monitoring of the own internal voltage supply
- Locking of the circuit-breaker in the OFF position if there is insufficient voltage

The capacitor trip device ensures that the circuit-breaker on the plant side can still be safely disconnected even if there is a power failure or the normal OFF command is not effective, e.g. because of a wire break.

Note: Option **N21** cannot be combined with option **U01** (converter version for NAFTA with UL listing).

N22

Switch on input side (static excitation unit, see Accessories)

If option **N22** is selected, a switch which is controlled by the static excitation unit itself is integrated on the input side. On the versions for brushless reverse field excitation this switch is configured as a contactor, on the versions for slip-ring excitation as a disconnector.

Note: If this switch is not available, an external switch must be provided.

Options (continued)

N30 to N33

Controlled outgoing feeder for auxiliaries 400 V 3 AC/480 V 3 AC

A controlled outgoing feeder for the operation of external auxiliary equipment, e.g. separate fans on the motor or pumps/oil supplies, is available in the converter. It is controlled and is fused by motor circuit-breakers. The voltage supply required for the drive must be provided externally.

Depending on the drive power that is required, four different outgoing feeders are available.

The contactor is switched **on** with the ON command at the converter and switched **off** with the OFF command.

Option	Description
N30	Controlled outgoing feeder for auxiliaries 400 V 3 AC 50 Hz, max. 5 kW (cos phi = 0.8; setting range of motor circuit-breaker from 7 A to 10 A)
N31	Controlled outgoing feeder for auxiliaries 400 V 3 AC 50 Hz, max. 7 kW (cos phi = 0.8; setting range of motor circuit-breaker from 14 A to 20 A)
N32	Controlled outgoing feeder for auxiliaries 400 V 3 AC 50 Hz, max. 11 kW (cos phi = 0.8; setting range of motor circuit-breaker from 20 A to 25 A)
N33	Controlled outgoing feeder for auxiliaries 400 V 3 AC 50 Hz, max. 16.5 kW (cos phi = 0.8; setting range of motor circuit-breaker from 28 A to 40 A)

Note: Other voltages are also possible taking into account that the available power will change.

Note: It is not possible to combine several options (**N30** to **N33**).

Auxiliary voltage supply	Outgoing feeder for auxiliaries	Circuit-breaker external supply ON	
=.GC–X1:1 L1	=.GC–X1:4 L1	=.GC–X2:1	Relay contact max. 60 V DC
=.GC–X1:2 L2	=.GC–X1:5 L2	=.GC–X2:2	
=.GC–X1:3 L3	=.GC–X1:6 L3		

N35 to N38

Controlled outgoing feeder for auxiliaries 230 V 1 AC/120 V 1 AC

A controlled outgoing feeder protected by miniature circuit-breakers is available in the converter for controlling external auxiliaries, e.g. the anti-condensation heating for the motor. The voltage supply required for the drive, e.g. for the anti-condensation heating, must be provided externally.

Depending on the power that is required, four different outgoing feeders are available.

The contactor is switched **off** with the ON command at the converter and switched **on** with the OFF command.

Option	Description
N35	Controlled outgoing feeder for auxiliaries 230 V 1 AC 50 Hz, max. 1.2 kW or 120 V 1 AC 60 Hz, max. 1 kW
N36	Controlled outgoing feeder for auxiliaries 230 V 1 AC 50 Hz, max. 2.2 kW or 120 V 1 AC 60 Hz, max. 1.5 kW
N37	Controlled outgoing feeder for auxiliaries 230 V 1 AC 50 Hz, max. 3.5 kW or 120 V 1 AC 60 Hz, max. 2.1 kW
N38	Controlled outgoing feeder for auxiliaries 230 V 1 AC 50 Hz, max. 4.5 kW or 120 V 1 AC 60 Hz, max. 2.8 kW

Note: It is not possible to combine several options (**N35** to **N38**).

Auxiliary voltage supply	Outgoing feeder for auxiliaries	Circuit-breaker external supply ON	
=.GC–X1:7 L1	=.GC–X1:9 L1	=.GC–X2:3	Relay contact max. 60 V DC
=.GC–X1:8 N	=.GC–X1:10 L2	=.GC–X2:4	

Options (continued)

T58, T60, T80, T85, T90, T91

Rating plate languages

As standard the rating plate is supplied in two languages (English/German). Other languages can be ordered using the following order codes.

Option	Description
T58	Rating plate in English/French
T60	Rating plate in English/Spanish
T80	Rating plate in English/Italian
T85	Rating plate in English/Russian (on request)
T90	Rating plate in English/Japanese (on request)
T91	Rating plate in English/Chinese (on request)

Note: It is not possible to combine several options (**T58** to **T91**).

U01

Converter version for NAFTA with UL listing

A converter version for the North American market is supplied with option **U01**. It is approved and listed by the Underwriter Laboratories (UL).

Option **U01** is only available for SINAMICS GM150 in an air-cooled IGBT version in the voltage classes 2.3 kV, 3.3 kV and 4.16 kV.

- Following options are included as standard in option **U01**:
  - **M10** (safety closing/interlocking system)
  - **M11** (dust protection)
  - **T58** (rating plate in English/French)

Furthermore the converters in NAFTA version have an auxiliary voltage connection for 480 V 3 AC/120 V 1 AC. Both auxiliary voltages must be made available on the plant side.

In connection with option **U01**, option **L50** (cabinet lighting and service socket outlet in the control section) is configured with supply voltage 120 V. In this case the service socket outlet corresponds to the version for the USA.

- Following options cannot be combined with option **U01**:
  - **N20** and **N21** (capacitor trip device)
  - **L95** (PT100 evaluation unit with 6 inputs for explosion-proof motors)
- Following options are available in connection with option **U01** on special request:
  - **N13** (circuit-breaker at converter input)
  - **L48** and **L49** (grounding switch at converter input and output)
  - **E01** and **E02** (control of separately excited synchronous motors)
  - **L53** (UPS for power supply of control)

W02

Cooling unit with redundant stainless steel plate-type heat exchangers (with water cooling)

The cooling unit is used to dissipate the power loss from the converter and consists of two cooling circuits: the internal cooling circuit with deionized water and the external raw-water circuit for dissipating the power loss. In the standard version the internal cooling circuit has two redundantly operating circulation pumps and one stainless steel plate-type heat exchanger. With option **W02**, a second stainless steel plate-type heat exchanger is integrated to enable fully redundant operation.

W11

Cooling unit with one titanium plate-type heat exchanger (with water cooling)

If the raw-water described in the technical data is not available for the cooling unit, option **W11** must be selected. This is required in the case of aggressive raw-water such as seawater, for instance. With option **W11**, a titanium plate-type heat exchanger is installed instead of the stainless steel plate-type heat exchanger. The three-way valve for preventing condensation and the necessary pipe connections are still made of stainless steel.

Attention: When option **W11** is selected, the piping on the raw-water side is made of stainless steel, not titanium.

W12

Cooling unit with redundant titanium plate-type heat exchangers (with water cooling)

With option **W12**, two fully redundantly operating titanium plate-type heat exchangers are integrated for the internal cooling circuit (other characteristics as described under option **W11**).

Attention: When option **W12** is selected, the piping on the raw-water side is made of stainless steel, not titanium.

W14

Converter without cooling unit, plant scope (with water cooling)

When option **W14** is selected, the water-cooled converter is supplied without a cooling unit. The necessary cooling system must be provided on the plant side.

Note: Option **W14** reduces the width and weight of the cabinet (relevant data available on request).

W20

Raw-water connection from bottom (SINAMICS GM150 in IGBT version)

Option **W20** enables the raw-water for the cooling unit to be supplied from bottom through the cabinet floor with a flange connection. The necessary counterflanges are included as a pack with the cooling unit.

Note: With water-cooled converters in IGBT technology, the raw-water connection is supplied to the cooling unit through the side panel from the left-hand side. With converters in IGCT technology, the raw-water connection is supplied as standard to the cooling unit from bottom.

Options (continued)

Y09

Special paint finish according to RAL....

Converters are supplied as standard in RAL 7035 (light gray). A special color must be specified in plain text when ordering. In the case of the SINAMICS GM150 air-cooled version, the fans are still finished in RAL 7035 even if the cabinet is in a special color.

Y10

Customer-specific circuit diagrams

The circuit diagrams are given customer-specific headers.

The data for the header must be specified in plain text (up to three lines of 45 characters per line).

Y15

Sine-wave filter (SINAMICS GM150 in IGBT version)

Sine-wave filters are needed if the converter is used in the retrofit business, where existing motors shall be operated with variable speed or where the operation of non-Siemens motors is intended and no special measures for converter operation can be made. Furthermore, sine-wave filters are needed when unshielded motor cables are used.

The sine-wave filters supply the motors with almost sine-wave motor currents and voltages so that the operation of standard motors is possible. Standard cables (without EMC shielding) can also be used between the sine-wave filter and the motor. The voltage harmonic distortion at an output frequency of 50 Hz is less than 5% when sine-wave filters are used.

If the sine-wave filter is used, the power of the converter must be reduced (see technical data).

It must also be remembered that only machines with square-law load characteristics (e.g. pumps, fans) can be operated. Field weakening operation is not permitted. Possible rated output frequencies are limited to the range 30 Hz to max. 66 Hz. The frequency setting range is 1:10.

Note: The rated motor current, the motor current in the operating point and the motor no-load current must be specified in plain text when ordering filters.

Converter	Max. cable lengths			
	without sine-wave filter (standard)		with sine-wave filter [1] (option **Y15**)	
	shielded	unshielded	shielded	unshielded
Output voltage 2.3 kV to 6.6 kV				
SINAMICS GM150 IGBT version	up to 2 parallel cables: 100 m 3 parallel cables: 80 m >3 parallel cables: not permitted	not permitted	1000 m	1000 m

Attention: Option **Y15** increases the width of the cabinet (for dimensions see technical data).

Y17

Line reactor (static excitation unit, see Accessories)

With option **Y17** a line reactor is integrated to protect against excessive harmonic currents and to limit the line harmonic distortions. The exact values for the reactor must be specified in plain text as they are dependent on the supplying network.

Y40

Raw-water data deviates from technical data (with water cooling, on request)

With option **Y40**, raw-water whose data does not conform to the technical data can also be used in water-cooled converters (for specification, see the section cooling unit in chapter Configuration). Deviations from the values indicated in the specification must be clarified in advance.

Y75

Auxiliary voltage other than 400 V 3 AC (SINAMICS GM150)

An auxiliary supply of 400 V 3 AC must be provided on the plant side to supply voltage to the fans, controller and closed-loop control and protection and monitoring units and to precharge the DC link. If the auxiliary supply on the plant differs from this value, option **Y75** for matching the voltage must be selected. In this case the three-phase current supply on the plant side which differs from the standard version is adapted with three individual transformers to the required voltage level. Tappings from 200 V 3 AC to 690 V 3 AC are available for this purpose. The auxiliary voltage and frequency available at the place of installation must be specified in plain text so that the required matching transformers can be configured. The current required for the auxiliary supply can be determined from the data for the current requirement at 400 V 3 AC (see technical data, conversion to existing auxiliary voltage).

Note: In case of isolated networks the maximum supply voltage is 500 V 3 AC.

Note: Connection to the matching transformers is only possible from the rear of the converter.

Auxiliary voltage supply		Supply voltage for
=.EA1-Q11:1	L1	Fans, precharging of DC link
=.EA1-Q11:3	L2	
=.EA1-Q11:5	L3	
=.EB-X1:1	L1	Control, protection and monitoring unit
=.EB-X1:2	N	

1) Distance from converter to motor according to current load for max. 6 parallel three-wire EMC cables.

Accessories

6

6/2	**Accessories for grounding and short-circuiting the converter**
6/2	**Accessories for replacing phase modules, IGCTs and diodes**
6/2	**Static excitation units**
6/3	Static excitation units for brushless reverse field excitation
6/6	Static excitation units for slip-ring excitation
6/10	**STARTER drive/commissioning software**
6/11	**Drive ES engineering system**
6/12	**SIMOTION SCOUT engineering system**

Accessories for grounding and short-circuiting the converter

Overview

Accessories for grounding and short-circuiting the converter for commissioning and maintenance work

For safety reasons, devices for grounding and short-circuiting the converter are required for work on the converter in the deenergized state (DIN EN 61230/VDE 0683-100 (IEC 61230)). They are required for commissioning or maintenance work, for example, as well as for replacing fans or power cards/phase modules.

As some of this work has to be performed by operator personnel with the relevant training, the specified tools must be available on the plant side. If these devices are not available, the work must not be performed due to the electrical hazards.

In the case of SINAMICS GM150 and SINAMICS SM150, spherical grounding points are fitted on the input and output side in the area of the connecting bar which can be short-circuited and grounded with an appropriate three-pole grounding device (grounding harness).

As a rule, this must be done in the deenergized state for all work (in the case of converters with a power section connected in parallel at both supply points or motor feeders).

If appropriate devices are not available on the plant side, the relevant converter accessories must be supplied in the required quantity.

Please note in this case that the number of three-pole grounding devices required is dependent on the number of supplying three-phase current systems. One grounding device per three-phase current system is required.

If there is a risk of power being supplied from the motor side back into the converter, one grounding device per three-phase current system must be fitted here as well.

Selection and ordering data

Description	Order No.
Grounding pole 1000 mm for connecting the grounding device	**6SY8101-0AB54**
Three-pole grounding device (grounding harness) for 20 mm spherical grounding points for grounding and short-circuiting the DC link	**6SY8101-0AB55**
Three-pole grounding device (grounding harness) with universal terminals	**6SY8101-0AB58**

Accessories for replacing phase modules, IGCTs and diodes

Overview

Accessories for replacing phase modules, IGCTs and diodes (SINAMICS GM150 in IGCT version and SINAMICS SM150)

The phase modules of the converters with IGCT power semiconductors SINAMICS GM150 in IGCT version and SINAMICS SM150 can be replaced as a unit by trained personnel. To replace, the entire phase module must be extracted from the converter using a special lifting tool and transported on a stacker truck.

In addition, a tool kit can be ordered for unloading the module column to replace the IGCT, as well as gripping pliers for replacing freewheel diodes.

Selection and ordering data

Description	Order No.
Gripping pliers for freewheel diode	**6SC8476-1AA00-0AA0**
Lifting tool for changing module	**6SC8476-1BA00-0AA0**
Tool kit for unloading the module column	**6SC8476-1CA00-0AA0**
Contact spray	**6SC8476-1DA00-0AA0**
Stacker truck RHM23 standard	**6SC8476-1EA00-0AA0**

Static excitation units

Overview

The following versions are available as static excitation units for SINAMICS GM150 and SINAMICS SM150:

- Static excitation unit for separately excited synchronous motors with brushless reverse field excitation
- Static excitation unit for separately excited synchronous motors with slip-ring excitation

Both versions are controlled by the converter via a PROFIBUS interface.

A static excitation unit must always be ordered together with the converter but it has its own order number.
Add "-Z" to the order number of the converter and specify order code E01 or E02. The static excitation unit cannot be ordered on its own.

Note: Option **G30** (PROFIBUS master) must be ordered in connection with SINAMICS GM150.

Selection and ordering data

Rated current A	Supply voltage V	Comment	**Static excitation unit** Order No.
130	500 3 AC	–	**6RN7030-1RH31-3AA0**
250	500 3 AC	–	**6RN7030-2RH32-5AA0**
250	500 3 AC	Can only be ordered together with option **M66** (marine version).	**6RN7031-1RH32-5AA0-Z M66**

Accessories

PROFIBUS connection cable between basic device and static excitation unit

Designation	Order No.
PROFIBUS cable	**6XV1830-0EH10**
Connector for PROFIBUS without PG/PC connection	**6ES7972-0BA41-0XA0**
Connector for PROFIBUS with PG/PC connection	**6ES7972-0BB41-0XA0**

Options

When ordering a converter with options, add **"-Z"** to the order number of the device, followed by the order code(s) for the desired option(s).

In the following tables, related options are arranged in groups. Whether the options can be combined or are mutually exclusive is indicated within these groups. A detailed description of the options can be found in the chapter Description of options.

Input-side options	
Switch on input side (configured as a contactor)	**N22**

Enhanced degree of protection for cabinets		**M11**	**M54**
Dust protection	**M11**		–
IP54 degree of protection [1]	**M54**	–	

1) Option **M54** cannot be combined with options **M13**, **M78** or **M34**.

Connection of power and signal cables [1]		**M13**	**M78**	**M34**
Connection of power cables to converter input from top [2] (on request)	**M13**		✓	✓
Connection of power cables to converter output from top [2] (on request)	**M78**	✓		✓
Connection of auxiliary voltage and signal cables from top	**M34**	✓	✓	

1) Options **M13**, **M78** and **M34** cannot be combined with option **M54**.
2) If options **M13** and/or **M78** are selected, the specified width of the cabinets increases by approx. 400 mm. If option **M66** is selected simultaneously, the cabinet is 900 mm wide.

PROFIBUS communication (SINAMICS GM150)	
PROFIBUS master	**G30**

Industry-specific options	
Marine version with type certificate [1]	**M66**

1) Option **M66** is available only for version **6RN7031-1RH32-5AA0-Z**.

✓	Options can be combined
–	Options are mutually exclusive

Options (continued)

Documentation (standard: PDF format in English on CD-ROM)		D00	D02	D15	D56	D72	D77	D78	D84	D92	Y10
Documentation in German	D00		✓	✓	–	–	–	–	–	–	✓
Circuit diagrams, terminal diagrams and dimension drawings in DXF format [1]	D02	✓		✓	✓	✓	✓	✓	✓	✓	✓
One set of printed documentation (multiple orders possible)	D15	✓	✓		✓	✓	✓	✓	✓	✓	✓
Documentation in Russian (on request)	D56	–	✓	✓		–	–	–	–	–	✓
Documentation in Italian (on request)	D72	–	✓	✓	–		–	–	–	–	✓
Documentation in French (on request)	D77	–	✓	✓	–	–		–	–	–	✓
Documentation in Spanish	D78	–	✓	✓	–	–	–		–	–	✓
Documentation in Chinese	D84	–	✓	✓	–	–	–	–		–	✓
Documentation in Japanese (on request)	D92	–	✓	✓	–	–	–	–	–		✓
Circuit diagrams with customer-specific description field (plain text required) [1]	Y10	✓	✓	✓	✓	✓	✓	✓	✓	✓	

1) The equipment-specific documents (circuit diagrams etc.) are available only in English/German.

Rating plate language (standard: English/German)		T58	T60	T80	T85	T90	T91
Rating plate in English/French	T58		–	–	–	–	–
Rating plate in English/Spanish	T60	–		–	–	–	–
Rating plate in English/Italian	T80	–	–		–	–	–
Rating plate in English/Russian (on request)	T85	–	–	–		–	–
Rating plate in English/Japanese (on request)	T90	–	–	–	–		–
Rating plate in English/Chinese (on request)	T91	–	–	–	–	–	

Auxiliary voltage supply	
Auxiliary voltage other than 400 V 3 AC (primary voltage must be indicated in plain text)	Y75

Converter acceptance tests in presence of customer		F03	F73	F77	F97
Visual acceptance of converter [1]	F03		–	–	–
Functional acceptance of converter with inductive load [1]	F73	–		✓	–
Acceptance of insulation test of the converter [1]	F77	–	✓		–
Customer-specific converter acceptance tests (on request) [1]	F97	–	–	–	

1) An acceptance test of static excitation units is only possible together with the converter which must be ordered simultaneously.

Other options		L50	L55	Y09
Cabinet lighting and service socket outlet in control section	L50		✓	✓
Anti-condensation heating for cabinet	L55	✓		✓
Special paint finish according to RAL .... (in a color other than RAL 7035; plain text required)	Y09	✓	✓	

✓	Options can be combined
–	Options are mutually exclusive

Technical data

Brushless reverse field excitation	Type	6RN7030-1RH31-3AA0	6RN7030-2RH32-5AA0	6RN7031-1RH32-5AA0-Z M66
Rated current	A	130	250	250
Supply voltage	V	690 3 AC	690 3 AC	690 3 AC
Voltage range		110 V –10% to 500 V +10%	110 V –10% to 500 V +10%	110 V –10% to 500 V +10%
Rated supply frequency	Hz	50/60	50/60	50/60
Frequency range	Hz	45 to 65	45 to 65	45 to 65
Power loss at rated current (SIMOTRAS HD)	kW	1.3	2 × 1.3	1.3
Electronics power supply	V	400 2 AC, 1 A or 230 1 AC, 2 A	400 2 AC, 1 A or 230 1 AC, 2 A	400 2 AC, 1 A or 230 1 AC, 2 A
Fan power supply		without fan	without fan	50 Hz 400 V 3 AC, 0.24 A 60 Hz 460 V 3 AC, 0.24 A
Max. current requirement of auxiliary supply 50/60 Hz 230 V AC	A	16	16	16
Max. current requirement of auxiliary supply 50/60 Hz 400 V 3 AC	A	–	–	6
Cooling air requirement	m^3/s	–	–	0.85
Sound pressure level L_{pA}	dB(A)	< 73	< 73	< 73
Measuring surface level L_s	dB(A)	16	16	16
Cable cross-sections, line-side, max. connectable per phase	mm^2 (DIN VDE)	1 × 35 to 240	1 × 70 to 240	1 × 70 to 240
	AWG/MCM (NEC, CEC)	1 × 2 AWG to 500 MCM	1 × 2/0 AWG to 500 MCM	1 × 2/0 AWG to 500 MCM
Cable cross-sections, motor-side, max. connectable per phase	mm^2 (DIN VDE)	1 × 35 to 240	1 × 70 to 240	1 × 70 to 240
	AWG/MCM (NEC, CEC)	1 × 2 AWG to 500 MCM	1 × 2/0 AWG to 500 MCM	1 × 2/0 AWG to 500 MCM
PE connection, max. connection cross-section at enclosure with M12 screw	mm^2 (DIN VDE)	1 × 70	1 × 70	1 × 70
	AWG/MCM (NEC, CEC)	1 × 2/0 AWG	1 × 2/0 AWG	1 × 2/0 AWG
Degree of protection		IP42	IP42	IP44
Dimensions (with cabinet doors and side panels)				
• Width	mm	600	600	900
• Height	mm	2200	2200	2200
• Depth	mm	600	600	600
Weight	kg	200	200	200

Static excitation units for slip-ring excitation

Selection and ordering data

Rated direct current A	Supply voltage V	Comment	**Static excitation unit** Order No.
600	400 3 AC	–	**6RN7011-5SE36-0AA0**
600	460 3 AC	marine version	**6RN7011-5SE36-0AA0-Z M66**
1200	460 3 AC	–	**6RN7011-2SE41-2AA0**
1200	460 3 AC	compact	**6RN7011-3SE41-2AA0**
2000	690 3 AC	–	**6RN7011-1SH42-0AA0**

Accessories

PROFIBUS connection cable between basic device and static excitation unit

Designation	Order No.
PROFIBUS cable	**6XV1830-0EH10**
Connector for PROFIBUS without PG/PC connection	**6ES7972-0BA41-0XA0**
Connector for PROFIBUS with PG/PC connection	**6ES7972-0BB41-0XA0**

Options

When ordering a converter with options, add **"-Z"** to the order number of the device, followed by the order code(s) for the desired option(s).

In the following tables, related options are arranged in groups. Whether the options can be combined or are mutually exclusive is indicated within these groups. A detailed description of the options can be found in the chapter Description of options.

Input-side options		**N22**	**Y17**
Switch on input side [1] (configured as a disconnector)	**N22**		✓
Line reactor (plain text required)	**Y17**	✓	

1) Option **N22** is not available for the compact version **6RN7011-3SE41-2AA0**. In this case a switch must be provided on the plant side.

Protection functions		**L21**	**L87**
Overvoltage protection AC [1]	**L21**		✓
Insulation monitoring device for rotor system	**L87**	✓	

1) Option **L21** is not available for the compact version **6RN7011-3SE41-2AA0**. In this case, AC overvoltage protection must be provided on the plant side. Otherwise a connection voltage of 200 V must not be exceeded.

Enhanced degree of protection for cabinets		**M11**	**M54**
Dust protection	**M11**		–
IP54 degree of protection [1]	**M54**	–	

1) Option **M54** cannot be combined with options **M13**, **M78** or **M34**.

Ventilation version	
Redundant fan in power section [1]	**M61**

1) If option **M61** is selected, the specified height of the cabinets changes. Option **M61** is not available for the compact version **6RN7011-3SE41-2AA0**.

✓	Options can be combined
–	Options are mutually exclusive

Options (continued)

Connection of power and signal cables [1]		M13	M78	M34
Connection of power cables to converter input from top [2] (on request)	M13		✓	✓
Connection of power cables to converter output from top [2] (on request)	M78	✓		✓
Connection of auxiliary voltage and signal cables from top	M34	✓	✓	

1) Options **M13**, **M78** and **M34** cannot be combined with option **M54**.
2) If options **M13** and/or **M78** are selected, the specified width of the cabinets increases by approx. 400 mm. Options **M13** and **M78** are not available for the compact version **6RN7011-3SE41-2AA0**.

PROFIBUS communication (SINAMICS GM150)	
PROFIBUS master	G30

Industry-specific options	
Marine version with type certificate [1]	M66

1) Option **M66** is available only for version **6RN7011-5SE36-0AA0-Z**. Option **M66** cannot be combined with options **M61** and **L87**. Insulation monitoring must be provided externally.

Documentation (standard: PDF format in English on CD-ROM)		D00	D02	D15	D56	D72	D77	D78	D84	D92	Y10
Documentation in German	D00		✓	✓	–	–	–	–	–	–	✓
Circuit diagrams, terminal diagrams and dimension drawings in DXF format [1]	D02	✓		✓	✓	✓	✓	✓	✓	✓	✓
One set of printed documentation (multiple orders possible)	D15	✓	✓		✓	✓	✓	✓	✓	✓	✓
Documentation in Russian (on request)	D56	–	✓	✓		–	–	–	–	–	✓
Documentation in Italian (on request)	D72	–	✓	✓	–		–	–	–	–	✓
Documentation in French (on request)	D77	–	✓	✓	–	–		–	–	–	✓
Documentation in Spanish	D78	–	✓	✓	–	–	–		–	–	✓
Documentation in Chinese	D84	–	✓	✓	–	–	–	–		–	✓
Documentation in Japanese (on request)	D92	–	✓	✓	–	–	–	–	–		✓
Circuit diagrams with customer-specific description field (plain text required) [1]	Y10	✓	✓	✓	✓	✓	✓	✓	✓	✓	

1) The equipment-specific documents (circuit diagrams etc.) are available only in English/German.

✓	Options can be combined
–	Options are mutually exclusive

Static excitation units for slip-ring excitation

Options (continued)

Rating plate language (standard: English/German)		T58	T60	T80	T85	T90	T91
Rating plate in English/French	T58		–	–	–	–	–
Rating plate in English/Spanish	T60	–		–	–	–	–
Rating plate in English/Italian	T80	–	–		–	–	–
Rating plate in English/Russian (on request)	T85	–	–	–		–	–
Rating plate in English/Japanese (on request)	T90	–	–	–	–		–
Rating plate in English/Chinese (on request)	T91	–	–	–	–	–	

Auxiliary voltage supply	
Auxiliary voltage other than 400 V 3 AC (primary voltage must be indicated in plain text)	Y75

Converter acceptance tests in presence of customer		F03	F73	F77	F97
Visual acceptance of converter [1]	F03		–	–	–
Functional acceptance of converter with inductive load [1]	F73	–		✓	–
Acceptance of insulation test of the converter [1]	F77	–	✓		–
Customer-specific converter acceptance tests (on request) [1]	F97	–	–	–	

1) An acceptance test of static excitation units is only possible together with the converter which must be ordered simultaneously.

Other options		L50	L55	Y09
Cabinet lighting and service socket outlet in control section	L50		✓	✓
Anti-condensation heating for cabinet	L55	✓		✓
Special paint finish according to RAL .... (in a color other than RAL 7035; plain text required)	Y09	✓	✓	

✓	Options can be combined
–	Options are mutually exclusive

Technical data

Slip-ring static excitation unit	Type	6RN7011-5SE36-0AA0	6RN7011-5SE36-0AA0-Z M66	6RN7011-2SE41-2AA0	6RN7011-3SE41-2AA0	6RN7011-1SH42-0AA0
Rated direct current	A	600	600	1200	1200	2000
Supply voltage	V	400 3 AC	460 3 AC	460 3 AC	460 3 AC	690 3 AC
Voltage range	%	–20 to +15	–20 to +15	–20 to +15	–20 to +15	–20 to +10
Rated supply frequency	Hz	50/60	50/60	50/60	50/60	50/60
Frequency range	Hz	45 to 65	45 to 65	45 to 65	45 to 65	45 to 65
Power loss at rated direct current (SIMOREG DC master)	kW	1.8	1.8	4.7	4.7	8.2
Electronics power supply	V	230 1 AC, 2 A	400 2 AC, 1 A or 230 1 AC, 2 A	230 1 AC, 2 A	230 1 AC, 2 A	230 1 AC, 2 A
Fan power supply	V	400 3 AC, 50 Hz, 0.3 A 460 3 AC, 60 Hz, 0.3 A	400 3 AC, 50 Hz, 0.55 A 460 3 AC, 60 Hz, 0.55 A	230 1 AC, 50/60 Hz, 2.6/3.3 A	230 1 AC, 50/60 Hz, 2.6/3.3 A	400 3 AC, 50 Hz, 1.0 A 460 3 AC, 60 Hz, 1.25 A
Max. current requirement of auxiliary supply 50/60 Hz 230 V AC	A	–	16	6	6	3
Max. current requirement of auxiliary supply 50/60 Hz 400 V 3 AC	A	plant-specific, typical 50	6	–	–	2
Cooling air requirement	m^3/s	0.16	0.85	0.36	0.36	0.67
Sound pressure level L_{pA}	dB(A)	< 73	< 85	< 85	< 85	< 87
Measuring surface level L_s	dB(A)	17	17	17	16	17
Cable cross-sections, line-side, max. connectable per phase	mm^2 (DIN VDE)	2 × 185	1 × 95	4 × 240	4 × 240	6 × 240
	AWG/MCM (NEC, CEC)	2 × 350 MCM	1 × 3/0 AWG	4 × 500 MCM	4 × 500 MCM	6 × 500 MCM
Cable cross-sections, motor-side, max. connectable per phase	mm^2 (DIN VDE)	2 × 240	2 × 95	4 × 185	4 × 185	8 × 185
	AWG/MCM (NEC, CEC)	2 × 500 MCM	2 × 3/0 AWG	4 × 350 MCM	4 × 350 MCM	8 × 350 MCM
PE connection, max. connection cross-section at enclosure with M12 screw	mm^2 (DIN VDE)	1 × 185	1 × 50	2 × 240	2 × 240	3 × 240
	AWG/MCM (NEC, CEC)	1 × 350 MCM	1 × 1/0 AWG	2 × 500 MCM	2 × 500 MCM	3 × 500 MCM
Degree of protection		IP23	IP44	IP23	IP23	IP23
Dimensions (with cabinet doors and side panels)						
• Width	mm	1200	900	600	600	600
• Height	mm	2200	2200	2200	2200	2200
• Depth	mm	600	1200	1200	600 (compact)	1200
Weight	kg	420	1000	450	450	550

STARTER drive/commissioning software

Overview

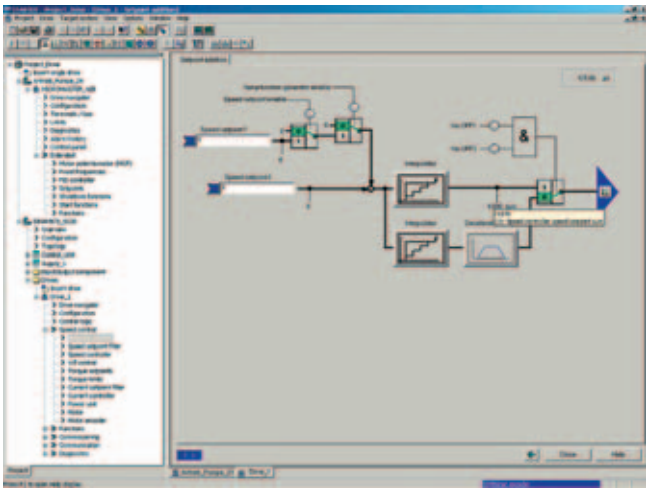

The easy-to-use STARTER drive/commissioning software can be used for

- commissioning,
- optimization and
- diagnostics.

This software can be operated either as a standalone PC application or can be integrated into the SCOUT engineering system (on SIMOTION) or STEP 7 (with Drive ES Basic). The basic functions and handling are the same in both cases.

In addition to the SINAMICS drives, the current version of STARTER also supports MICROMASTER 4 drives and frequency converters for the centralized SIMATIC ET 200S FC.

The project wizards can be used to create the drives within the structure of the project tree.

First-time users are supported by a solution-based dialog menu, with a standard graphics-based display maximizing clarity when setting the drive parameters.

First commissioning is guided by wizards, which make all the basic settings in the drive. This enables a drive to be up and running after only setting a small number of parameters within the drive configuration process.

The individual settings required are made using graphics-based parameterization screen forms, which also display the mode of operation.

Examples of individual settings that can be made include:

- terminals
- bus interface
- setpoint channel (e.g. fixed setpoints)
- speed control (e.g. ramp-function generator, limits)
- BICO interconnections
- diagnostics

Experts can gain rapid access to the individual parameters via the expert list and do not have to navigate dialogs.

In addition, the following functions are available for optimization purposes:

- self-optimization
- trace (depending on drive)

Diagnostics functions provide information about:

- control/status words
- parameter status
- operating conditions
- communication states

Performance

- Easy to use: only a small number of settings need to be made for successful first commissioning: axis turning.
- Solution-based dialog-based user guidance simplifies commissioning.
- Self-optimization functions reduce manual effort for optimization.
- The built-in trace function provides optimum support during commissioning, optimization and troubleshooting.

Minimum hardware and software requirements

PG or PC with Pentium™ II 400 MHz (Windows™ 2000)
Pentium™ III 500 MHz (Windows™ XP)

256 MB RAM (512 MB recommended)

Monitor resolution 1024 × 768 pixels

Windows™ 2000 SP3, XP Professional SP1

Microsoft Internet Explorer 5.01

Integration

For the communication between PG/PC and a Control Unit a PROFIBUS Communication Module and a connection cable are required.

E.g. PROFIBUS Communication Module CP 5512 (PCMCIA card type 2 + adapter with 9-pole SUB-D socket for connection to PROFIBUS).
For MS Windows 2000/XP Professional and PCMCIA 32)
Order No.: **6GK1551-2AA00**

and connection cable between CP 5512 and PROFIBUS
Order No.: **6ES7901-4BD00-0XA0**

For MICROMASTER 4, SINAMICS G110 and SINAMICS G120 PC converter connection sets are available for a safe point-to-point connection to the PC.
Order No. for MICROMASTER 4: **6SE6400-1PC00-0AA0**
(the scope of supply includes a 9-pole SUB-D connector and an RS 232 standard cable, 3 m)

Order No. for SINAMICS G110 and SINAMICS G120:
6SL3255-0AA00-2AA0
(the scope of delivery includes a 9-pole SUB-D connector and a RS 232 standard cable, 3 m, and the STARTER commissioning tool on CD-ROM)

Selection and ordering data

Description	Order No.
STARTER commissioning tool for SINAMICS and MICROMASTER German/English/French/Italian	**6SL3072-0AA00-0AG0**

Overview

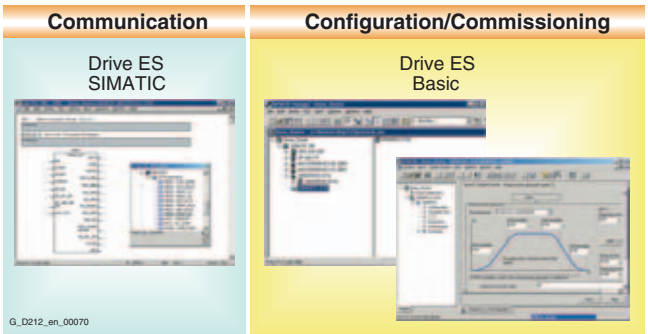

Drive ES is the engineering system used to integrate Siemens drive technology into the SIMATIC automation world easily, efficiently and cost-effectively in terms of communication, configuration and data management. The STEP 7 Manager user interface provides the basis for this procedure.

Various software packages are available for SINAMICS:

- **Drive ES Basic**
  for first-time users of the world of Totally Integrated Automation and the option for routing beyond network limits and the use of the SIMATIC teleservice.
  Drive ES Basic is the basic software program for setting the parameters of all drives online and offline.
  Drive ES Basic enables both the automation system and drives to be handled via the SIMATIC Manager user interface.
  Drive ES Basic is the starting point for common data archiving for complete projects and for extending the use of the SIMATIC teleservice to drives. Drive ES Basic provides the configuration tools for the new Motion Control functions slave-to-slave communication, equidistance and isochronous operation with PROFIBUS DP.
- **Drive ES SIMATIC**
  simple parameterization of the STEP 7 communication instead of programming.
  In order to use Drive ES SIMATIC, STEP 7 must be installed. It features a SIMATIC function block library, making the programming of the PROFIBUS interface in the SIMATIC CPU for the drives easy and secure. There is no need for separate, time-consuming programming of the data exchange between the SIMATIC CPU and the drive.
  All Drive ES users need to remember is:
  Copy – Modify – Download – Ready.
  Customized, fully-developed function blocks are copied from the library into user-specific projects.
  Frequently-used functions are set to run in program format:
  - Read out complete diagnostics buffer automatically from the drive
  - Download complete parameter set automatically from the SIMATIC CPU to the drive – e.g. in the event of a device being replaced.
  - Load part parameter sets (e.g. recipe and product replacement) automatically from the SIMATIC CPU
  - Read back, i.e. update, complete parameterization or part parameter sets from the drive to the SIMATIC CPU.
- **Drive ES PCS 7**
  integrates drives with the PROFIBUS interface into the SIMATIC PCS 7 process control system.
  Drive ES PCS 7 can only be used with SIMATIC PCS 7 Version 5.0 and higher. Drive ES PCS 7 provides a function block library with function blocks for the drives and the corresponding faceplates for the operator station, which enables the drives to be operated from the PCS 7 process control system.

For further information please visit us on the Internet at:

http://www.siemens.com/drivesolutions

Selection and ordering data

Description	Order No.
Drive ES Basic V 5.4	
• Configuration software for the integration of drives into Totally Integrated Automation • Requirement: STEP 7 V5.3 and higher, SP3 • Supply format: on CD-ROM Ger., Eng., Fr., Sp., It. with electronic documentation	
Single-user license	**6SW1700-5JA00-4AA0**
Multi-user license, 60 pieces	**6SW1700-5JA00-4AA1**
Update service for single-user license	**6SW1700-0JA00-0AB2**
Update service for multi-user license	**6SW1700-0JA00-1AB2**
Upgrade from V 5.x to V 5.4	**6SW1700-5JA00-4AA4**
Drive ES SIMATIC V 5.4	
• Function block library for SIMATIC for the parameterization of communication with the drives • Requirement: STEP 7 V5.3 and higher, SP3 • Supply format: on CD-ROM Ger., Eng., Fr., Sp., It. with electronic documentation	
Single-user license incl. 1 x runtime license	**6SW1700-5JC00-4AA0**
Runtime license	**6SW1700-5JC00-1AC0**
Update service for single-user license	**6SW1700-0JC00-0AB2**
Upgrade from V 5.x to V 5.4	**6SW1700-5JC00-4AA4**
Drive ES PCS 7 V 6.1	
• Function block library for PCS 7 for the integration of drives • Requirement: PCS 7 V 6.1 and higher • Supply format: on CD-ROM Ger., Eng., Fr., Sp., It. with electronic documentation	
Single-user license incl. 1 x runtime license	**6SW1700-6JD00-1AA0**
Runtime license	**6SW1700-5JD00-1AC0**
Update service for single-user license	**6SW1700-0JD00-0AB2**
Upgrade from V 5.x to V 6.1	**6SW1700-6JD00-1AA4**

SIMOTION SCOUT engineering software

Overview

While the SIMOTION Motion Control system provides a wide variety of preprogrammed functions, you can also parameterize and program it for customized use.
High performance tools, which provide optimum support and ease of use for the necessary engineering steps, are required for this.

The SIMOTION SCOUT engineering system is the basis for uniform automation in mechanical engineering with SIMOTION and is integrated into the SIMATIC environment in accordance with TIA.

SIMOTION SCOUT provides

- an integrated, function-oriented view of your automation task, combined with
- a high level of user friendliness.

The possible SIMOTION applications range from a simple, parameterizable, speed-controlled single axis through to complex, mechatronically-coupled and programmable multi-axes machines.

Therefore, SIMOTION SCOUT provides views adapted to the task and can be expanded with additional tools (e.g. tool for the graphic creation of cams).

SIMOTION SCOUT is the engineering system for SIMOTION integrated in STEP 7 and provides all the required tools for

- configuration
- parameterization
- programming
- testing and
- diagnostics.

Tasks such as

- the creation of the hardware and network configuration and the
- creation, configuration and parameterization of technological objects such as
  - axes
  - probes
  - cams
  - cam tracks
  - cam disks, etc.

are graphically supported with operator prompting.

The following programming languages are available for programming a SIMOTION application:

- ST (Structured Text in accordance with IEC 61131) textual high-level language
- LADs (Ladder Diagrams) and FBDs (Function Block Diagrams)
- MCC (Motion Chart Control)

The integrated test and diagnostics functions are useful when commissioning and servicing.

System requirements

Software

- SIMOTION SCOUT
  - Windows NT4 SP6 or
  - Windows 2000 SP3 or
  - Windows XP Professional SP2
  - SIMATIC STEP 7 V5.2 SP1 or SIMATIC STEP 7 V5.3 SP1/SP2/SP3 (with SIMOTION SCOUT stand-alone STEP 7 is not required as installation condition)
  - Optional: Drive ES Basic V5.3 SP1 is necessary if SIMODRIVE 611 universal or MASTERDRIVES MC is to be integrated in the project data management

Hardware

Minimum system requirements for PG/PC for SIMOTION SCOUT

- Hardware requirements for
  - Windows NT4 and Windows 2000, Pentium II 400 MHz/512 MB and higher
  - Windows XP Professional, Pentium III 500 MHz/512 MB and higher
- Main memory configuration 512 MB for:
  - PG/PC
  - SIMOTION P350
- Min. screen resolution: 600 x 800 pixels
- Free hard disk storage: 790 MB, 1 GB for SIMOTION SCOUT stand-alone

Selection and ordering data

Description	Order No.
SIMOTION SCOUT V3.2 SP1 (German/English/Italian), Single license including STARTER, runtime software and documentation with data carrier for SIMOTION SCOUT	**6AU1810-1BA32-0XA0**
SIMOTION SCOUT V3.2 SP1 Upgrade (German/English/Italian), Single license including STARTER, runtime software and documentation with data carrier for SIMOTION SCOUT	**6AU1810-1BA32-0XE0**
SIMOTION SCOUT stand-alone V3.2 SP1 (German/English/Italian), Single license including STARTER, runtime software and documentation with data carrier for SIMOTION SCOUT	**6AU1810-1CA32-0XA0**
SIMOTION SCOUT stand-alone V3.2 SP1 Upgrade (German/English/Italian), Single license including STARTER, runtime software and documentation with data carrier for SIMOTION SCOUT	**6AU1810-1CA32-0XE0**
SIMOTION SCOUT Software Update Service	**6AU1810-0BA00-0XL0**

Further information

A number of additional software products can be used in connection with SIMOTION SCOUT environment. It must be ensured that the corresponding versions of these software products are compatible. Compatibility lists are available under

http://support.automation.siemens.com/WW/view/de/18857317

Configuration

7

7/2	**SIZER configuration tool**
7/3	**Overview of interfaces**
7/3	Overview of connections
7/5	Terminal block on TM31
7/6	Terminal block on TM15
7/6	Terminal block on isolation amplifier
7/6	Temperature monitoring with PT100 evaluation unit
7/6	Incorporation of an externally forced stop
7/6	Incorporation of an externally arranged EMERGENCY STOP button
7/7	Control of circuit-breaker on input side
7/7	Checkbacks from the circuit-breaker on input side
7/7	OFF command to superordinate circuit-breaker
7/7	Connection of the auxiliary voltage supply
7/7	Connection of the cooling unit
7/8	**Cooling unit**
7/10	**Circuit-breakers**
7/10	**Transformers**
7/12	**Power cables**
7/13	**Motors**
7/14	**Scope of delivery**

SIZER configuration tool

Overview

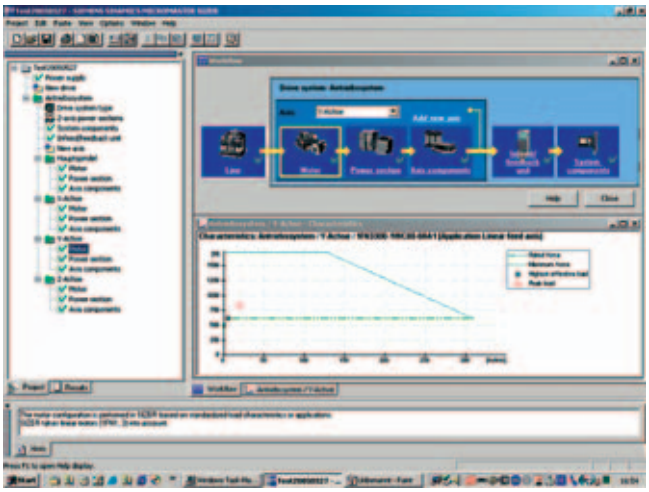

The SIZER configuration tool provides an easy-to-use means of configuring the SINAMICS and MICROMASTER 4 drive families, as well as the SINUMERIK solution line CNC control. It provides technical support when sizing the hardware and firmware components required for a drive task. SIZER supports the complete configuration of the drive system, from simple individual drives to complex multi-axis applications.

SIZER supports all configuration stages in one workflow:

- selection of the line supply
- motor design as a result of load configuration
- calculation of the drive components
- selection of the required accessories
- selection of the line-side and motor-side power options

When SIZER was being designed, particular importance was placed on high usability and a universal, function-based approach to the drive task. The extensive user guidance makes using the tool easy. Status information keeps you continually informed about the progress of the configuration process.

The SIZER user interface is available in German and English.

The drive configuration is saved in a project. In the project, the components and functions used are displayed in a hierarchical tree structure.

The project view supports the configuration of drive systems and the copying/inserting/modifying of already configured drives.

The configuration process produces the following results:

- parts list of the components required
- technical data
- characteristics
- comments on line harmonic distortions
- location diagram and dimension drawings

These results are displayed in a results tree and can be reused for documentation purposes.

User support is provided by the technological online help menu, which provides the following information:

- detailed technical data
- information about the drive systems and their components
- decision-making criteria for the selection of components

Minimum hardware and software requirements

PG or PC with Pentium™ II 400 MHz (Windows™ 2000) Pentium™ III 500 MHz (Windows™ XP)

256 MB RAM (512 MB recommended)

At least 665 MB of free hard disk space

An additional 100 MB of free hard disk space on Windows system drive

Monitor resolution 1024 × 768 pixels

Windows™ 2000 SP2, XP Professional SP1, XP Home Edition SP1

Microsoft Internet Explorer 5.5 SP2

Selection and ordering data

Description	Order No.
SINAMICS MICROMASTER SIZER configuration tool German/English	**6SL3070-0AA00-0AG0**
SIZER LD Snap-In Suite Extension for medium-voltage systems, motors and DC converters German/English	on request

Overview of connections SINAMICS GM150

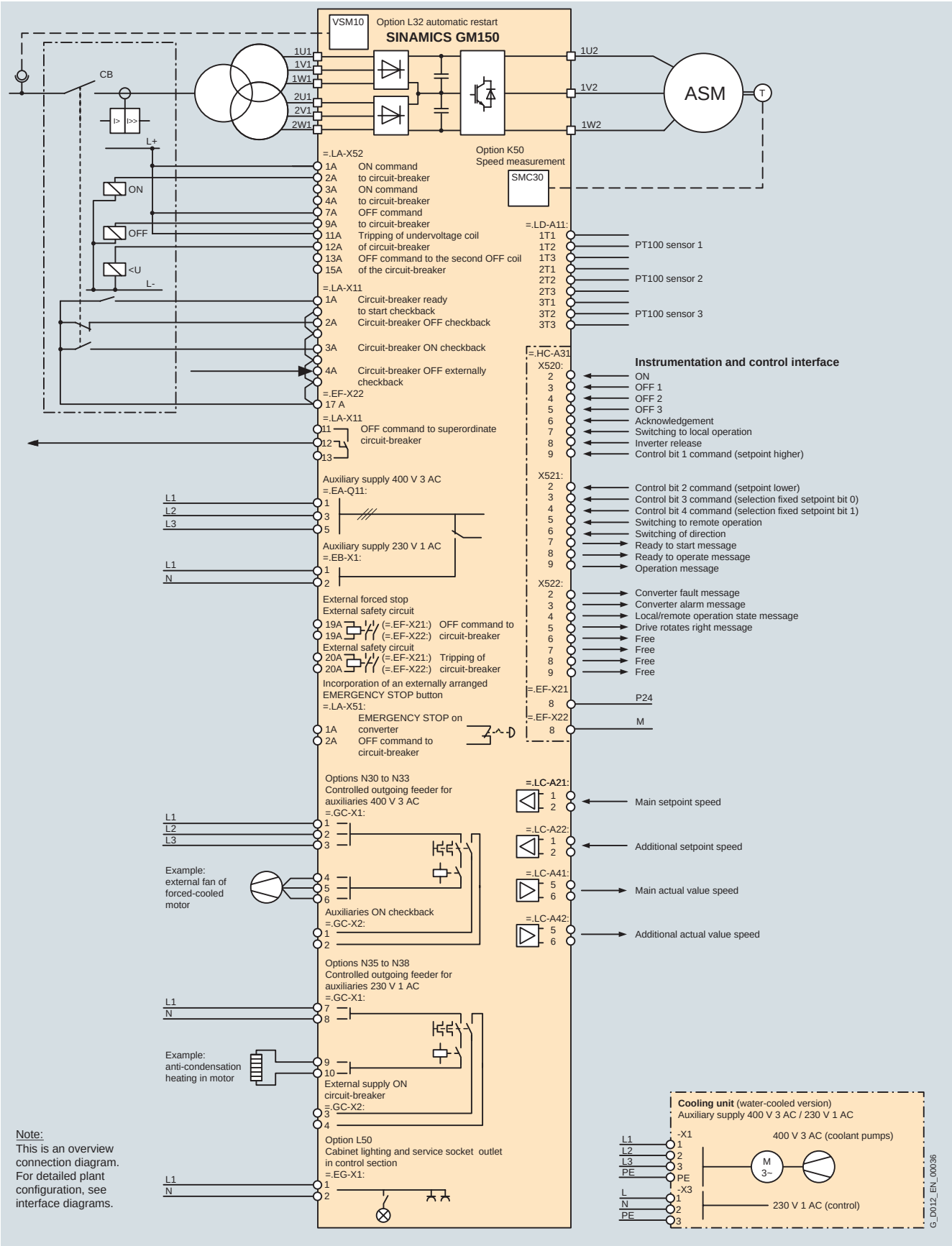

Overview of connections SINAMICS SM150

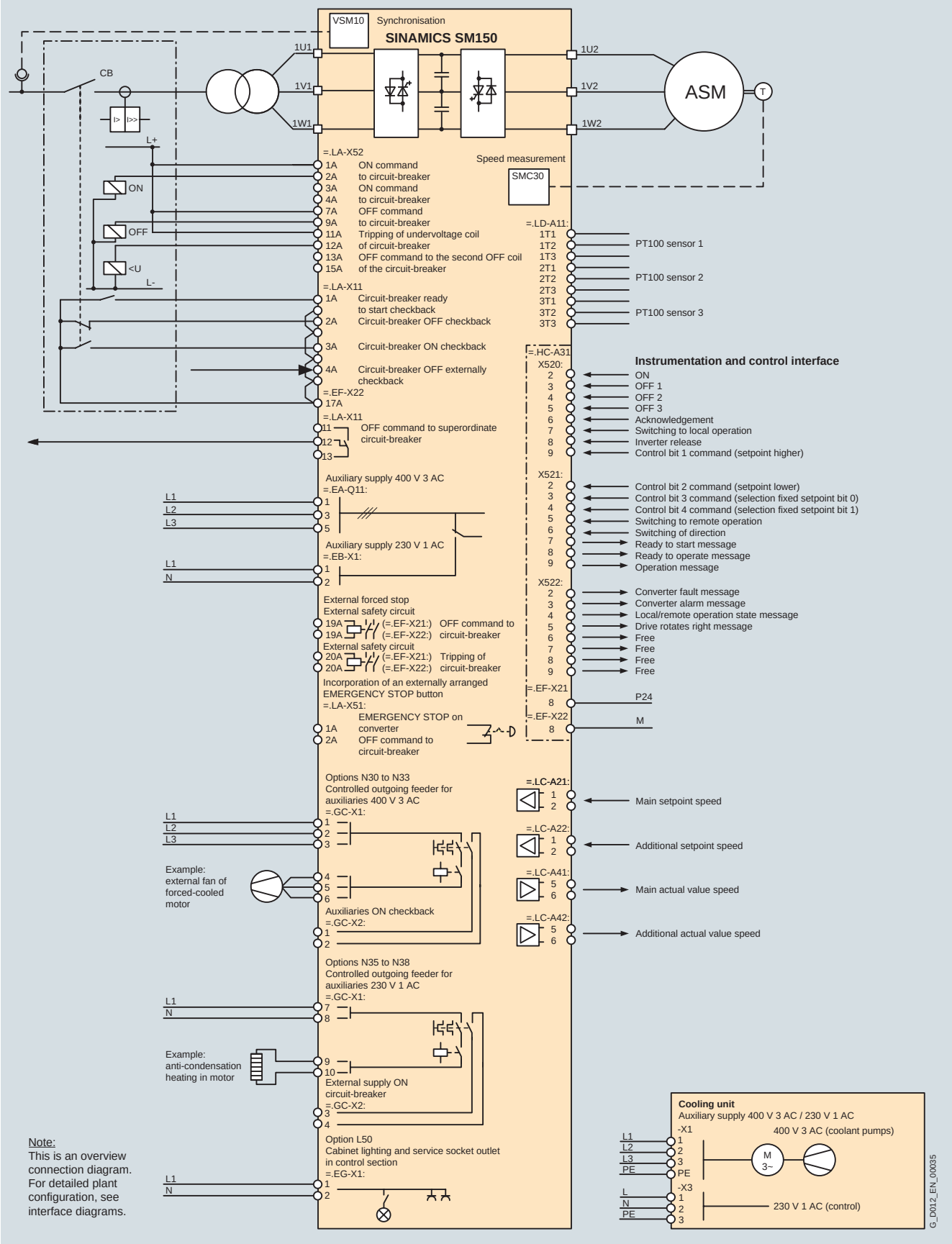

Configuration

The interfaces of the TM31 and TM15 Terminal Modules are available for communication with the superordinate control level. In addition, further terminal blocks can be used to connect the circuit-breaker or external protection and monitoring devices. The following tables give an overview of the type and preassignment of the interfaces in the standard version.

Note: For max. conductor cross-section and further technical data on TM31 and TM15 Terminal Modules, see description of options **G61** and **G63**.

Terminal block on TM31 (=.HC–A51)

Terminal	Type		Preassignment	Comment
X540:				
1-8	P24	24 V DC supply for inputs DI0 to DI7	–	–
X520:				
1	DI0	Digital input electrically isolated with optocoupler	Preassigned internally	–
2	DI1		Preassigned internally	–
3	DI2		–	–
4	DI3		–	–
5	M1	Reference ground for digital inputs DI0 to DI3	–	–
6	M	Reference ground for P24, auxiliary voltage for digital inputs	–	–
X530:				
1	DI4	Digital input electrically isolated with optocoupler	Preassigned internally	–
2	DI5		–	–
3	DI6		–	–
4	DI7		–	–
5	M2	Reference ground for digital inputs DI4 to DI7	–	–
6	M	Reference ground for P24, auxiliary voltage for digital inputs	–	–
X541:				
1	P24	24 V DC supply for inputs/outputs DI/O8 to DI/DO11	–	–
2	DI/DO8	Digital inputs/ digital outputs non-isolated	Preassigned internally	–
3	DI/DO9		–	–
4	DI/DO10		–	–
5	DI/DO11		–	–
6	M	Reference ground for P24, ground of digital inputs/ digital outputs	–	–

Terminal block on TM31 (=.HC–A51)

Terminal	Type		Preassignment	Comment
X521:				
1	AI0+	Analog inputs set up as differential inputs for the following ranges: –10 V to +10 V +4 mA to +20 mA 0 mA to +20 mA –20 mA to +20 mA The voltage input/current input is selected with a switch	Main setpoint speed	Isolation amplifiers are used here for voltage isolation (4 mA to 20 mA, 0 V to 10 V, 0 mA to 20 mA)
2	AI0-			
3	AI1+		Additional setpoint speed	Isolation amplifiers are used here for voltage isolation (4 mA to 20 mA, 0 V to 10 V, 0 mA to 20 mA)
4	AI1-			
5	P10	Auxiliary voltage ±10 V (10 mA) for connection of a potentiometer for setpoint input with an analog input	–	–
6	M		–	–
7	N10		–	–
8	M		–	–
X522:				
1	AO 0V+	Analog outputs for the following ranges: –10 V to +10 V +4 mA to +20 mA 0 mA to +20 mA –20 mA to +20 mA	Main actual setpoint (speed)	Isolation amplifiers are used here for voltage isolation (4 mA to 20 mA, 0 V to 10 V, 0 mA to 20 mA)
2	AO 0V-			
3	AO 0C+			
4	AO 1V+		Additional actual setpoint (speed)	Isolation amplifiers are used here for voltage isolation (4 mA to 20 mA, 0 V to 10 V, 0 mA to 20 mA)
5	AO 1V-			
6	AO 1C+			
7	KTY+	Temperature sensor KTY84 0 °C to 200 °C or PTC (R_{cold} < 1.5 kOhm)	–	The sensor type must be parameterized.
8	KTY-		–	
X542:				
1	DO 0.NC	Relay output for changeover contact Max. switching voltage: 250 V AC, 30 V DC Max. switching power at 250 V AC: 2000 VA Max. switching power at 30 V DC: 240 W	–	NC contact
2	DO 0.COM		–	Basic
3	DO 0.NO		–	NO contact
4	DO 1.NC	Relay output for changeover contact Max. switching voltage: 250 V AC, 30 V DC Max. switching power at 250 V AC: 2000 VA Max. switching power at 30 V DC: 240 W	–	NC contact
5	DO 1.COM		–	Basic
6	DO 1.NO		–	NO contact

Overview of interfaces

Configuration (continued)

Terminal block on TM15 (=.HC–A31)

Terminal	Type		Preassignment
X520:			
2	DI/DO0	Bidirectional digital inputs/outputs[1]	ON
3	DI/DO1		OUT1
4	DI/DO2		OUT2
5	DI/DO3		OUT3
6	DI/DO4		Acknowledgement
7	DI/DO5		Switching to local operation
8	DI/DO6		Inverter release
9	DI/DO7		Control bit 1 command (setpoint higher)
X521:			
2	DI/DO8	Bidirectional digital inputs/outputs [1]	Control bit 2 command (setpoint lower)
3	DI/DO9		Control bit 3 command (selection fixed setpoint bit 0)
4	DI/DO10		Control bit 4 command (selection fixed setpoint bit 1)
5	DI/DO11		Switching to remote operation
6	DI/DO12		Switching of direction
7	DI/DO13		Ready to start message
8	DI/DO14		Ready to operate message
9	DI/DO15		Operation message
X522:			
2	DI/DO16	Bidirectional digital inputs/outputs [1]	Converter fault message
3	DI/DO17		Converter alarm message
4	DI/DO18		Local/remote operation state message
5	DI/DO19		Drive rotates right message (clockwise)
6	DI/DO20		Free
7	DI/DO21		Free
8	DI/DO22		Free
9	DI/DO23		Free
=.EF–X21:			
8	P24		The jumper must be replaced according to the control mode (non-isolated/isolated).
=.EF–X22:			
8	M		The jumper must be replaced according to the control mode (non-isolated/isolated).

1) The digital inputs/outputs can be parameterized individually as inputs or outputs (isolation in three groups of eight channels each). The preassignment as an input or output is identified by underlining.

Terminal block on isolation amplifier

Terminal	Preassignment	Comment
=.LC–A21:		
1	Main setpoint speed (4 mA to 20 mA)	Signal level adjustable (0 V to 10 V; 0 mA to 20 mA; 4 mA to 20 mA)
2		
=.LC–A22:		
1	Additional setpoint speed (4 mA to 20 mA)	Signal level adjustable (0 V to 10 V; 0 mA to 20 mA; 4 mA to 20 mA)
2		
=.LC–A41:		
1	Main actual value speed (4 mA to 20 mA)	Signal level adjustable (0 V to 10 V; 0 mA to 20 mA; 4 mA to 20 mA)
2		
=.LC–A42:		
1	Additional actual value speed (4 mA to 20 mA)	Signal level adjustable (0 V to 10 V; 0 mA to 20 mA; 4 mA to 20 mA)
2		

Temperature monitoring with PT100 evaluation unit

Terminal	Type	Comment
=.LD–A11:		
1T1 to 1T3	PT100	Sensor 1
2T1 to 2T3	PT100	Sensor 2
3T1 to 3T3	PT100	Sensor 3

The sensors can be connected to the PT100 evaluation unit using both a two-wire or three-wire system. In the two-wire system, inputs xT1 and xT2 must be assigned and terminals xT2 and xT3 must be jumpered. The limit values for alarm and shutdown must be set centrally for all three sensors.
The output relays are integrated into the internal fault and shutdown sequence of the converter. The signals can also be picked up on the plant side with two spare fault signaling relays.

Incorporation of an externally forced stop [1]

Terminal	Type	Comment
=.EF–X21/=.EF–X22:		
19A	Button (NC contact)	External safety circuit: OFF command to the circuit-breaker
19A		
20A	Button (NC contact)	External safety circuit: Tripping of circuit-breaker
20A		

1) The jumpers must be replaced according to the control mode (non-isolated/isolated).

Incorporation of an externally arranged EMERGENCY STOP button

Terminal	Type	Comment
=.LA–X51:		
1A	Button (NC contact)	EMERGENCY STOP on converter
2A		

Configuration (continued)

Control of circuit-breaker on input side

Terminal	Type	Comment
=.LA–X52:		
1A	Isolated contact	ON command to circuit-breaker
2A		
3A	Isolated contact	ON command to circuit-breaker
4A		
7A	Isolated contact	OFF command to circuit-breaker
9A		
11A	Isolated contact	Tripping of undervoltage coil of circuit-breaker
12A		
13A	Isolated contact	OFF command to the second OFF coil of the circuit-breaker
15A		

Checkbacks from the circuit-breaker on input side

Terminal	Type	Comment
=.LA–X11:		
1A	Digital input	Circuit-breaker ready to start checkback
2A	Digital input	Circuit-breaker OFF checkback
3A	Digital input	Circuit-breaker ON checkback
4A	Digital input	Circuit-breaker OFF externally checkback

OFF command to superordinate circuit-breaker

Terminal	Type	Comment
=.LA–X11:		
11	Relay output for changeover contact	Basic
12	Admissible contact load DC-13 in acc. with DIN EN 60947-5-1/ VDE 0660-200 (IEC 60947-5-1): 24 V/10 A	NO contact
13		NC contact

Connection of the auxiliary voltage supply

Connection of auxiliary voltage 50 Hz 400 V 3 AC or other

Terminal	Type	Comment
=.EA1–Q11:		
1	L1	E.g. fan precharging of DC link
3	L2	
5	L3	

Connection of auxiliary voltage 50 Hz 230 V 1 AC or 60 Hz 120 V 1 AC

Terminal	Type	Comment
=.EB–X1:		
1	L1	E.g. controller and closed-loop control, protection and monitoring unit
2	N	

Connection of the cooling unit

Connection of voltage supply for the cooling unit

Terminal	Type	Comment
–X1:		
1	L1	Voltage supply for the coolant pumps
2	L2	
3	L3	
PE	PE	
–X3:		
1	L	Voltage supply for the internal control
2	N	
3	PE	

Cooling unit

Overview

The cooling unit is used to dissipate the power loss from the converter. It consists of an inner deionized water circuit and an outer raw-water circuit.

Mode of operation

The heated deionized water in the inner circuit of the converter passes through two redundantly operating, maintenance-free circulating water pumps into the water/water plate-type heat exchanger which is made of stainless steel and connected to the raw-water circuit on the plant side. The deionized water is cooled by the raw-water of the outer circuit and flows back into the converter.

The closed inner deionized water circuit is filled with deionized water and vented with a compensator. This vessel is located at the highest point of the cooling circuit.

Function

Requirements to be met by the raw-water

The raw-water must be chemically neutral, clean and free of solids. Other quality requirements to be met by the raw-water are listed in the following table.

Raw-water	
Grain size of any entrained parts	< 0.5 mm
pH value	6.5 to 8.0
Carbonate hardness	< 0.9 mMol/l (5 °dH)
Total hardness	< 1.7 mMol/l (9.5 °dH)
Chlorides	60 mg/l
Sulfates	80 mg/l
Nitrates	10 mg/l
Iron (Fe)	0.2 mg/l
Ammoniac	10 mg/l
Dissolved substances	< 3.4 mMol/l (340 ppm)

In case of deviations it is recommended to carry out an analysis of the water in order to ensure the heat exchanger's endurance strength. In case of aggressive cooling water (including sea water), plate-type heat exchangers made of titanium should be used (options **W11**, **W12**).

Requirements to be met by the cooling water in the deionized water circuit

The deionized water circuit must be filled and re-filled with cleaned water for batteries (distilled or demineralized water).

Deionized water	in acc. with EN 60993 (IEC 60993)
Specific conductivity when filled in	≤ 30 µS/cm [1]
Evaporation residue	< 20 mg/l
pH value	5 to 9
Content of • metals from the hydrogen sulfide group (lead, antimony, tin, bismuth, arsenic, copper, cadmium) • metals from the ammonium sulfide group (iron, cobalt, nickel, chrome, manganese) • sulfur and nitrogen chloride compounds	not detectable
Content of oxidizable, organic substances	no more than a quantity equivalent to the consumption of 30 mg/l potassium permanganate KMnO4

Monitoring units in the deionized water circuit

To guarantee the self-protection of the converter, the deionized water is monitored by the converter:

- Conductivity measurement:
  The conductivity of the cooling water is constantly monitored in order to ensure that the leakage currents in the converter between different voltage levels and with respect to ground remain low. An ion exchanger (in the cooling unit) holds the conductivity below the permitted maximum value of 1.0 µS/cm. If the conductivity is too high, the ion exchanger filling must be changed. After the first year, an ion exchanger filling must be changed at least every two years as a rule.
- Temperature monitoring
- Flow monitoring

Further monitoring operations and the control of the electrical equipment are performed in the cooling unit:

- A compensator for the compensation of changes in the volume of cooling water due to evaporation or temperature changes
- Pressure display in the converter water intake

The operating status is signaled to the converter.

Avoidance of condensation

To avoid condensation at low raw-water temperatures, a three-way valve for controlling the water temperature is installed as standard.

Redundancy (options **W02**, **W12**)

On request, the cooling unit can be designed for fully redundant operation, i.e. two plate-type heat exchangers are provided. In this case, defective parts can be exchanged while the system continues to run.

Tubular heat exchanger (on request)

If, contrary to the standard water quality values listed above, the raw-water contains suspended matter that might settle in the heat exchanger at slow flow velocities, then a tubular heat exchanger must be used. This and the actual quality of the raw-water must be specified when placing the order.

1) After the converter is filled and switched on, the conductivity value is reduced to the permitted operating value of < 1.0 µS/cm by the ion exchanger which is integrated in the cooling unit.

Function (continued)

External air-water-heat exchanger (on request)

If no process water is available on the plant side, an external air-water-heat exchanger can be used on request. In this case the ambient temperature must not exceed 35 °C.

Chiller (on request)

If no process water is available on the plant side and the ambient temperature is higher than 35 °C, a so called chiller (incl. compressor) can be used on request.

Specification for cooling unit (on request)

If option **W14** (converter without cooling unit) is selected, a specification for the cooling unit is available on request.

Flowchart of the cooling unit

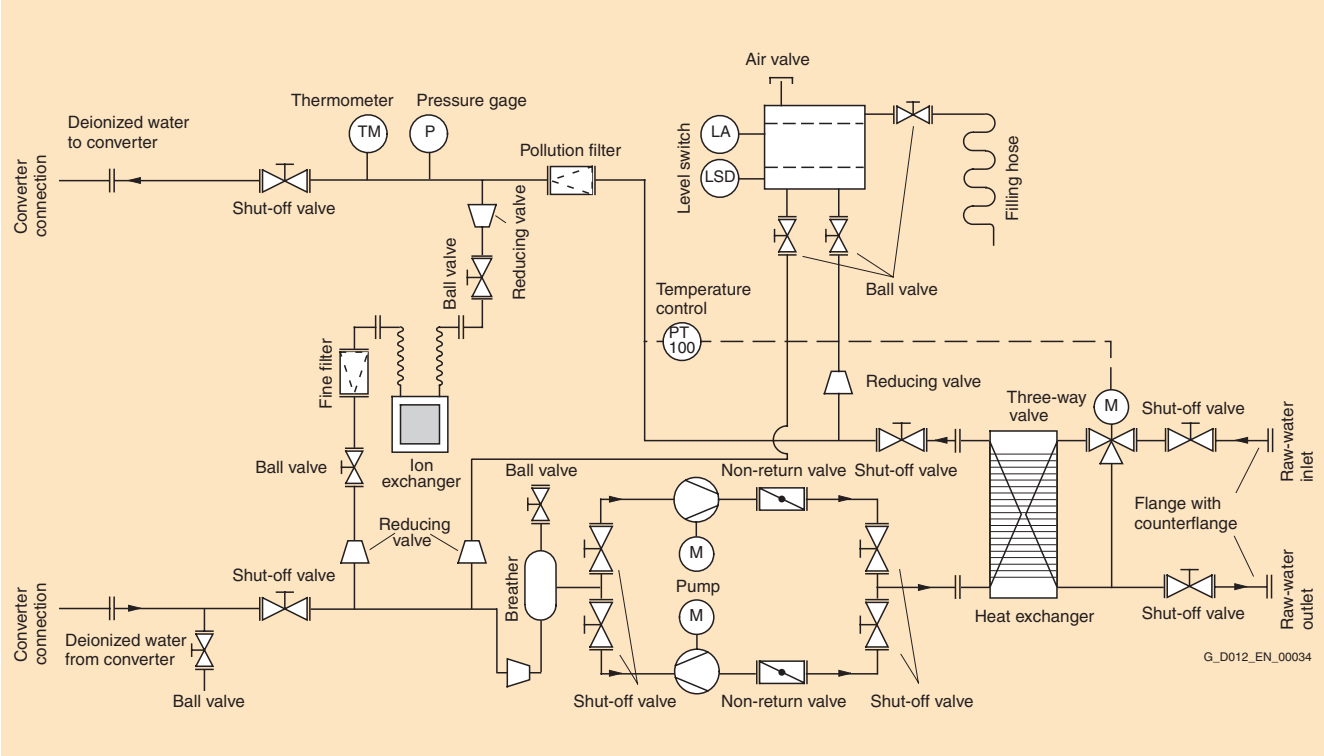

Technical data

Technical data of the cooling unit	
Degree of protection	
• Cabinet	IP20
• All internal components	IP54
Supply voltage	3/N/PE/400 V AC ±10%, 50/60 Hz ±3%
Raw-water circuit	
• Inlet temperature	min. +5 °C max. +35 °C (with power reduction of the converter max. +40 °C)
• Temperature rise in converter	max. 10 K (with minimum flow)
• Input pressure	min. 2 bar max. 10 bar
Pressure drop	min. 2.7 bar nominal 3.0 bar max. 3.3 bar

Circuit-breakers

Configuration

The circuit-breaker connected on the primary side of the incoming transformer on the plant side is part of the converter safety system. If a fault occurs inside the converter, the energy discharged at the fault location must be limited. This is realized as a result of the inductance of the incoming transformer which limits the rate-of-rise and the circuit-breaker trips as quickly as possible.

In order to guarantee these conditions, the circuit-breaker must have the following features:

- The complete release time of the circuit-breaker must not exceed 80 ms.
- The circuit-breaker must be equipped with an undervoltage release. The undervoltage release (undervoltage coil) is controlled through the release circuit into which also the “undervoltage release” output of the converter must be integrated. It is supplied with the auxiliary voltage (safe supply) of the switchgear.
- Additional delay times in controlling the circuit-breaker must be avoided. All commands from the converter to the circuit-breaker must act directly, without any coupling relays involved.
- A separate checkback signal must exist for each of the circuit-breaker states ON and OFF. The checkbacks must not be delayed, i.e. no coupling relays may be used.
- An additional, independently operating overcurrent protection of the circuit-breaker must be provided on the plant side.
- Under no circumstances may the circuit-breaker be switched on externally, by neither electrical nor mechanical means. A mechanical interlock of the manual ON command on the circuit-breaker prevents destruction of the converter by uncoordinated switch-on.

Transformers

Configuration

The SINAMICS GM150 and SINAMICS SM150 converters are always connected to the medium-voltage system through a converter transformer.

When the transformer is implemented, the drive (converter and motor) is decoupled and electrically isolated from the mains supply:

- the short-circuit power is reduced to a value smaller than max. permissible
- converter and motor are operated ground-free
- the line harmonic distortions and the voltage ripple are limited

A ground-fault monitor integrated in the converter monitors the insulation resistance against ground.

SINAMICS GM150

For the 12-pulse Basic Line Module of the SINAMICS GM150 converter, a three-winding transformer is required. The secondary windings of the three-winding transformer have a phase shift around 30°el, resulting in a 12-pulse infeed with accordingly lower line harmonic distortions.

For the 24-pulse Basic Line Module, two three-winding transformers are required. Through additional shifting of the primary-side windings of the two transformers around +7.5° and –7.5° respectively it is possible to configure a 24-pulse infeed. Instead of the two three-winding transformers a five-winding transformer can also be used in consultation with the transformer manufacturer.

Configuration

The following characteristics must be taken into account for the configuration:

- Short-circuit voltage:
  - $u_k \geq 8\%$ for SINAMICS GM150 in IGBT version
  - $u_k \geq 10\%$ for SINAMICS GM150 in IGCT version (related to 10 MVA)
- Tappings for voltage adjustments: 2 × ±2.5% or ±5% for operation with a sine-wave filter (the winding tappings are usually located on the primary side of the transformer)
- The voltages and insulation of the secondary-side windings must be configured according to the following table:

		SINAMICS GM150 IGBT version, basic circuit and SINAMICS GM150 IGCT version		**SINAMICS GM150 IGBT version**
Circuit		Basic circuit		Parallel connection of Basic Line Module and Motor Module on common DC bus
Infeed		12-pulse	24-pulse	24-pulse
Circuit designs (pages 2/4 and 3/4)		①, ⑨	②, ⑩	③, ④ [1]
Infeed transformers		1 three-winding transformer	2 three-winding transformers	2 three-winding transformers or 1 five-winding transformer
Recommended vector group		Dy5 Dd0	Dy5 Dd0 with shifting +7.5° Dy5 Dd0 with shifting –7.5°	
Converter output voltage	Test voltage	Transformer secondary voltage (no-load voltage)		
		Basic circuit		Parallel connection for power increase
kV	kV [2]	kV	kV	kV
2.3	23.6	2 × 1.2	2 × 0.6 (2x)	
3.3	33.6	2 × 1.7	2 × 0.85 (2×)	2 × 1.7 (2×)
4.16	38.9	2 × 2.2	2 × 1.1 (2×)	2 × 2.2 (2×)
6.0	53.0	–	2 × 1.55 (2×)	2 × 1.55 (2×) [1]
6.6	53.0	–	2 × 1.7 (2×)	2 × 1.7 (2×) [1]

option

SINAMICS SM150

A two-winding transformer is required for each Active Line Module. In the case of a parallel connection of two complete converter units it is also possible to use a three-winding transformer with shifted windings for the suppression of line harmonics.

The following characteristics must be taken into account for the configuration:

- Transformer secondary voltage: 3.3 kV
- Leakage inductance: 1 mH (this value includes all inductances between network and converter: network short-circuit inductance, transformer inductance, reactor inductance. Short-circuit voltage u_k = 15 to 28% depending on the transformer power)
- Tappings for voltage adjustments: 2 × ±2.5% (the winding tappings are normally located on the high voltage side of the transformer)

The transformer must be designed for the following loads:

- max. *dv/dt* load on the converter input terminals: 6 kV/µs
- peak voltage load phase-phase and phase-ground: 8.4 kV
- current load with direct component: approx. 4 A to 5 A

1) With 6.0 and 6.6 converters the configuration of the Basic Line Modules for parallel connection corresponds to the configuration of the 24-pulse basic circuit.

2) The specified voltages are the (impulse withstand) test voltages necessary for the transformer secondary windings against ground. As the transformers generally have temperature evaluations in the windings, the specified test voltages are necessary for reinforced insulation. If no control circuits are integrated in the windings, test voltages according to the basic insulation are adequate.

Configuration

If the SINAMICS GM150 and SINAMICS SM150 converters are operated without sine-wave filters, higher voltages arise on the motor terminals and therefore on the cable due to the switching edges. Therefore, suitable cables must be selected to meet the EMC and voltage endurance requirements. Different technical characteristics result in differences between the converters with IGBT power sections and those with IGCT power sections.

Motor cables

The correct cable cross-section depends not only on the motor current but also on the number of cables which are routed in parallel, the routing conditions and the ambient temperature. It must be determined for each individual case. Local installation regulations must be observed in addition.

For extensive systems it is recommended to install a cable for equipotential bonding in addition to the power cables. Local regulations must be observed in this case too.

SINAMICS GM150 in IGBT version (without sine-wave filter)

The cables from the converter to the motor must be designed as shielded, three-wire medium-voltage cables for 3.6/6 kV (in the case of 2.3, 3.3 and 4.16 kV converters) or for 6.6/10 kV (in the case of 6.0 and 6.6 kV converters). Symmetrical cables with individually shielded copper conductors are recommended. An additional shared outer shield is an advantage for improving the EMC characteristics. The cables must have a cable capacity of a maximum 0.5 µF/km with a diameter of 185 mm^2 (typically 0.4 µF/km). Single-wire cables (also shielded versions) are not recommendable for EMC reasons. Using more than three parallel cables per phase is not permitted.

SINAMICS GM150 in IGBT version (with sine-wave filter)

For operation with a sine-wave filter there are no special requirements to be met by the cables from the converter to the motor. Unshielded standard medium-voltage cables can be used. The voltage class of the cables must be selected in accordance with the voltage applied to the motor.

SINAMICS GM150 in IGCT version and SINAMICS SM150

The cables from the converter to the motor must be designed as shielded medium-voltage cables for 3.6/6 kV. Symmetrical three-wire cables with individually shielded copper conductors are recommended. An additional outer shield is an advantage for improving the EMC characteristics. Single-wire cables (also shielded versions) are permitted if three-wire, symmetrically arranged cable bundles with one cable from each phase are formed (three-phase current systems). Preferably four cables per phase are installed (but at least two cables per phase).

Cables between transformer and converter

The same considerations apply as in the case of the motor cables.

Permissible cable lengths

In the case of long cables between the converter and the motor, reflection effects lead to overvoltages on the motor terminals and hence to a higher motor insulation stress. These charge/discharge currents – and with them the voltage stress – can be limited by output reactors or sine-wave filters.

Maximum cable lengths without and with output reactor

Converter	Max. cable lengths			
	without output reactor (standard)		with output reactor [1] (option **L08**)	
	shielded	un-shielded	shielded	un-shielded
Output voltage 2.3 kV to 6.6 kV				
SINAMICS GM150 IGBT version	up to 2 parallel cables: 100 m 3 parallel cables: 80 m > 3 parallel cables: not permitted	not permitted	1000 m	not permitted
Output voltage 3.3 kV				
SINAMICS GM150 IGCT version	up to 2 parallel cables: 100 m 3 parallel cables: on request 4 parallel cables: on request	not permitted	500 m	not permitted
SINAMICS SM150	up to 2 parallel cables: 50 m 3 parallel cables: on request 4 parallel cables: on request	not permitted	200 m	not permitted

Maximum cable lengths without and with sine-wave filter

Converter	Max. cable lengths			
	without sine-wave filter (standard)		with sine-wave filter [1] (option **Y15**)	
	shielded	un-shielded	shielded	un-shielded
Output voltage 2.3 kV to 6.6 kV				
SINAMICS GM150 IGBT version	up to 2 parallel cables: 100 m 3 parallel cables: 80 m > 3 parallel cables: not permitted	not permitted	1000 m	1000 m

Maximum cable lengths between line-side transformer and converter

Converter	Max. cable lengths	
	shielded	unshielded
Output voltage 2.3 kV to 6.6 kV		
SINAMICS GM150	300 m	300 m
Output voltage 3.3 kV		
SINAMICS SM150	70 m	not permitted

1) Distance from converter to motor according to current load for max. 6 parallel three-wire EMC cables.

Configuration

Operation of Siemens high-voltage motors

No sine-wave filter is required between the Siemens high-voltage motors H-compact, H-compact PLUS, H-modyn and special motors for e.g. marine, rolling mill and high-speed applications and the converters SINAMICS GM150 and SINAMICS SM150. Reliable operation of the drive is assured by the following measures:

- The MICALASTIC VPI insulation system is optimally suited for the voltage stressing which occurs in converter operation.
- No dangerous bearing currents occur as insulated bearings are used on the drive end and a shaft grounding device on the non-drive end. If a digital speed encoder (option) is used, the shaft grounding device is integrated there.
- In order to effectively protect the bearings of the driven load, we recommend that insulated couplings are used. For almost all other applications, insulated couplings are available as standard from coupling manufacturers.
- Minimum motor rated frequency:
  - SINAMICS GM150 in IGBT version: 20 Hz
  - SINAMICS GM150 in IGCT version, SINAMICS SM150: 8.5 Hz

Operation of motors with several winding systems

To increase the output rating of the converters it is possible to operate several power sections in parallel. In this way a maximum output rating of up to 10 MVA with an output voltage of 4.16 kV can be achieved with the SINAMICS GM150 in IGBT version with a double parallel connection. Using the same principle, a maximum power of 28 MVA is achieved with the SINAMICS GM150 in IGCT version and the SINAMICS SM150 in triple parallel operation.

To ensure a uniform division of current between the two subsystems, two or three electrically isolated but mutually non-displaced winding systems are required in the motor.

Operation of two-pole motors

High-speed converter drives with 2-pole motors require special measures regarding their mechanical design (limiting and critical speed, bearings, rotor design, adaptation to the foundation). An inquiry is required for such applications.

For Retrofit applications, the motors must not show mechanical self-resonant frequency. Affected speed ranges can be faded by the converter if necessary.

Operation of explosion-proof motors

Motors from Siemens are also available in versions for use in hazardous areas. Available types of protection are:

- Pressurized enclosure EEx pe IIC T3 in accordance with IEC and EN 60079-2
- Non sparking EEx n AIIC T3 in accordance with IEC and EN 60079-15

Apart from the measures required – also on fixed-speed motors – to increase protection, on variable speed motors it is necessary in addition to configure the shaft grounding device with protection type EEx d IIC T6 (without rotary pulse encoder) or EEx de IIC T6 (with digital speed encoder).

Please always inquire for motors with increased safety EEx e.

Ex certification

For motors with EEx n type of protection and converter operation it may be necessary in the individual case to subject the complete system to an acceptance test in order to issue an Ex certificate. An inquiry is required for such cases.

No acceptance test of the complete system is required for motors with EEx pe type of protection and converter operation.

Drives with square-law load torque

Drives with a square-law load torque ($M \approx n^2$) such as for pumps and fans require the full torque at rated speed. Generally, increased starting torques or load surges do not occur. Thus, the converter does not have to be dimensioned for an overload condition.

The following applies when selecting a suitable converter for drives with square-law load torques: The rated converter current must be at least as high as the motor current which flows at full torque at the required load operating point.

Drives with constant load torque

Self-ventilated motors cannot provide their full rated torque in continuous operation over the complete speed range. The continually permissible torque decreases with decreasing speed due to the reduced cooling effect. With self-ventilated motors, the torque and output must be reduced according to the specific speed control range.

For forced-ventilated motors, depending on the speed control range, no or only a comparatively minor derating in torque, and hence in output, is necessary.

For frequencies above the rated frequency f_N, the motors are operated in the field weakening range. The usable torque decreases in this case with approx. f_N/f, and the power remains constant. Thus, a margin of ≥ 30% to the stall torque must be observed, which decreases according to the function $(f_N/f)^2$.

Drives with overload requirements

The rated data of the converters specified in the technical data provide no reserves for overload capability. If requirements are imposed on an increased overload capability of the converters, a power reduction of the converters is always necessary. The size of the required power reduction differs according to the application, operation mode and converter type. The power reduction can be determined on request if all boundary conditions are stipulated.

Operation of standard motors (only SINAMICS GM150 in IGBT version)

In connection with the optional sine-wave filter (option **Y15**) the SINAMICS GM150 in IGBT version is ideal for the operation of standard motors in applications with a square-law load torque (e.g. pumps and fans). The near sine-wave output voltages and currents rule out all load of the insulation system and bearings. The voltage harmonic distortion at an output frequency of 50 Hz equals less than 5% with a sine-wave filter.

It should be noted that only machines with a square-law reaction torque (fluid machines) can be operated and that operation in the field weakening range is not permitted. Possible nominal output frequencies (base frequencies) are limited to the range 30 Hz to max. 66 Hz. The frequency setting range is 1:10.

For optimum adaptation of the sine-wave filter to the motor, the motor must include details of the motor rated current, the motor current in the working rated point and the motor no-load current.

Scope of delivery

Configuration

The standard scope of delivery of the SINAMICS GM150 and SINAMICS SM150 comprises:

1. Basic unit

The basic unit consists of the converter power section incl. control, in either air-cooled or water-cooled version. One or more transport units are delivered depending on the converter type. Exact details are to be found in the dimension drawing for the specific order.

2. Cooling unit for water-cooled converters

The cooling unit consists of one transport unit and is delivered without deionized water. In the case of the SINAMICS GM150 as IGBT version a connecting piece from the cooling unit to the converter is delivered as well. For the SINAMICS GM150 converter in IGCT version and the SINAMICS SM150 converter the piping from the cooling unit to the basic unit runs below the units. The necessary pipes and connection pieces are part of the scope of delivery and are delivered as loose supply. Special conditions of installation are not taken into account and, where applicable, require special inquiry (e.g. cooling unit not placed directly next to the basic unit). The piping to the raw-water supply on the plant side is not included.

3. Optional components

Optional components, e.g. sine-wave filters or output reactors, are delivered as separate transport units. If necessary, cables for connecting the optional components to the power section are delivered as well.

4. Static excitation unit

In case of converters that drive synchronous motors, usually a static excitation unit is part of the scope of delivery. It must be ordered with a separate order number (see chapter "Accessories").

The following items are not included in the standard scope of delivery: cables between transformer and converter, motor cables, circuit-breakers, transformer, motor, cable ducts, filter systems and piping for the raw-water supply of the cooling unit.

Services and documentation

8

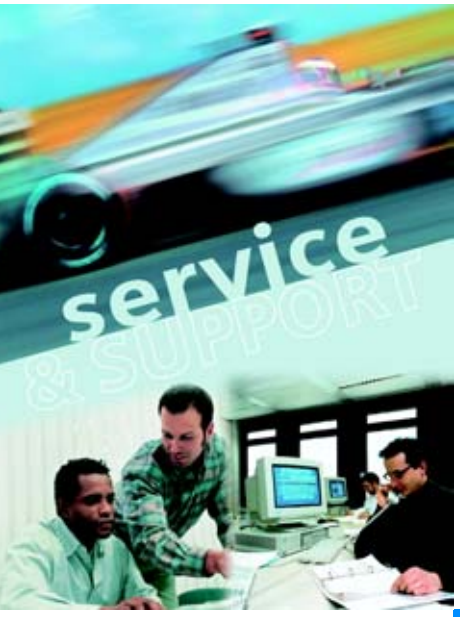

8/2 **Training**
8/2 Overview
8/3 Design
8/4 Description

8/6 **Training case**
8/6 AOP30 cabinet operator panel

8/7 **Documentation**

8/7 **SPARESonWeb**
Online spare parts catalog

8/8 **Service & Support**

Training

Overview

Training is decisive for your success

SITRAIN® – Siemens Training for Automation and Industrial Solutions – provides you with comprehensive support in solving your tasks.

Training by the market leader in automation, plant installation and plant support enables you to make your decisions with certainty and full command. Especially where the optimum and efficient use of products and plants are concerned. You can eliminate deficiencies in existing plants, and exclude expensive faulty planning right from the beginning.

All in all, this represents an enormous gain for your company: shortened commissioning times, optimized plant components, faster troubleshooting, reduced downtimes. In other words, increased profits and lower costs.

Top trainers

Our trainers know their topics in practice, and possess comprehensive didactic experience. Course developers have a direct wire to product development, and directly pass on their knowledge to the trainers.

Practical experience

The practical experience of our trainers makes it possible for them to pass on theoretical matter in a plausible manner. But since it is known that all theory is drab, we attach great importance to practical exercises which can comprise up to half of the course time. You can therefore immediately implement your new knowledge in practice. We train you on state-of-the-art methodically/didactically designed training equipment. You feel absolutely certain when trained in this manner.

Wide variety

With a total of approx. 300 local attendance courses, we train the complete range of A&D products and a large portion of the system solutions from I&S. Telecourses, teach-yourself software and seminars presented on the Web supplement our classical range of courses.

Close to our customers

The distance is short. You can find us approx. 60 times in Germany, and worldwide in 62 countries. You wish to have individual training instead of one of our 300 courses? Our solution: we will provide a program tailored exactly to your personal requirements. Training can be carried out in our training centers or at your company.

The right mixture: blended learning

Blended learning is understood to be the combination of various training media and sequences. For example, a local attendance course in a training center can be optimally supplemented by a teach-yourself program as preparation or follow-up. Furthermore, SITRAIN utilizes supported online training for live instruction on the Internet at agreed times.

The right mixture is the solution. Therefore blended learning can convey complex topics well, and train networked thinking. Additional effect: reduced traveling costs and periods of absence through training sequences independent of location and time.

The international learning portal

Additional information is available on the Internet under:

http://www.siemens.com/sitrain

All training facilities at a glance: search in the worldwide range of courses at leisure, call up all course dates online, utilize the daily updated display of vacant course spaces - and register directly.

Or let us advise you personally:

Course office, Infoline Germany
Phone: +49 (0)1805-23 56 11
Fax: +49 (0)1805-23 56 12

... and request our latest training catalog on:

Description	Language	Order No.
ITC Catalog (paper version)	German	**E86060-K6850-A101-B6**
Dates and price list including CD-ROM	German	**E86060-P6850-A101-D2**
SITRAINonCD on CD-ROM interactive course information system	German/ English	**E86060-D6850-A100-C4-7400**
Overview of training worldwide	German/ English	**E86060-K6899-A101-B5-7400**

Design

SINAMICS GM150/SM150 courses

Here you will find an overview of the training courses available for the SINAMICS GM150/SM150.

The courses are modular in design and are intended for a variety of target groups as well as individual customer requirements.

The system overview will acquaint decision makers and sales personnel with the system very quickly.

The planning course provides all the information you need to size the drive system.

The basic and follow-up courses are sure to provide all the technical knowledge service personnel will need for servicing/commissioning Motion Control applications, communication and cabinet units.

All modules contain as many practical exercises as possible, in order to enable intensive and direct training on the drive system and with the tools in small groups.

Title	Target group					Duration	Course code
	Decision makers, sales personnel	Configuration engineers, project engineers	Programmers	Commissioning engineers, configuration engineers	Service personnel		
SINAMICS system overview	✓					2 days	DR-SN-UEB
SINAMICS GM150/SM150 configuration		✓	✓			4 days	DR-SNM-PRJ
SINAMICS GM150/SM150 commissioning and service/diagnostics				✓	✓	5 days	DR-SNM-SI
SINAMICS communication			✓	✓	✓	3 days	DR-SN-COM

Design (continued)

SINAMICS GM150/SM150 learning path

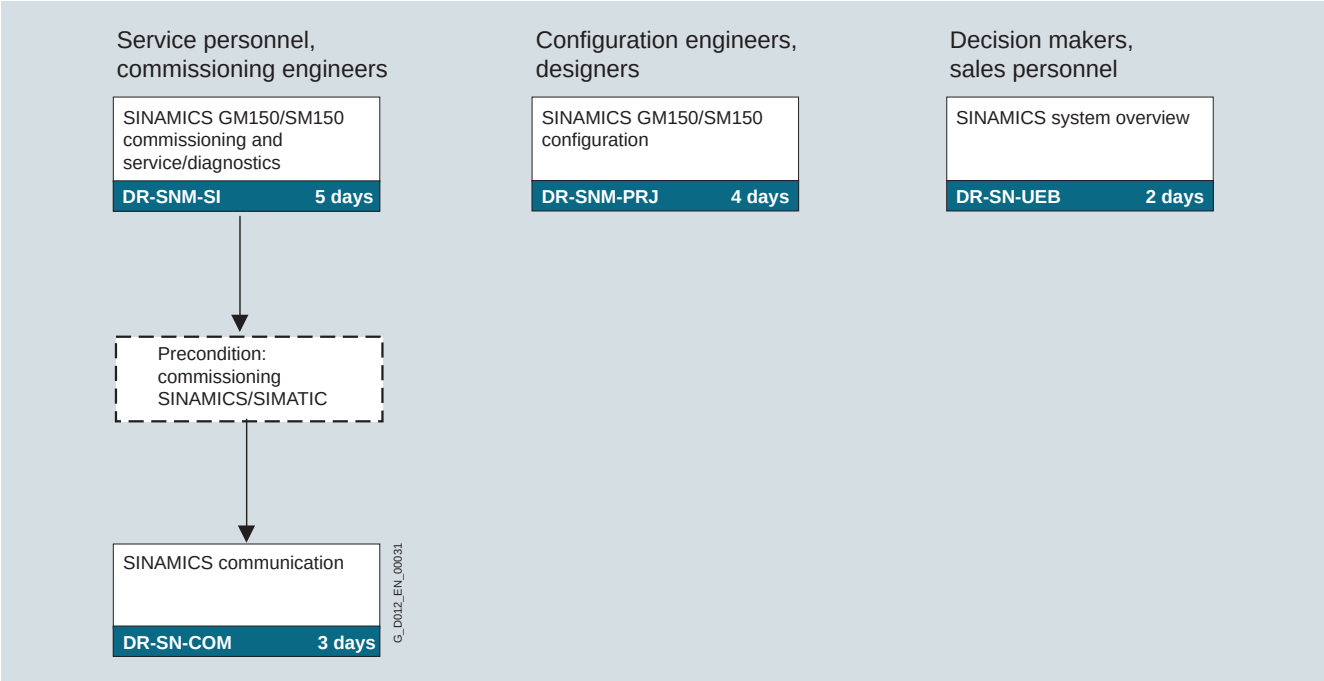

Description

SINAMICS system overview (2 days)
DR-SN-UEB

Description/learning target

This course has been specially designed for sales personnel and decision makers, who wish to attain a rapid overview of the SINAMICS drive concept and its position in the existing Siemens drive environment.

The system overview is supplemented by an introduction to the fundamentals of motor and converter technology.

The SIZER configuration tool and the STARTER commissioning tool are presented and explained using short exercises.

Target group

Decision makers and sales personnel

Content

- SINAMICS system overview
- Position with respect to existing drive systems
- Fundamentals of converter engineering and motors
- SIZER configuration tool
- STARTER commissioning tool
- Simple commissioning of a drive
- Practical exercises using the training case

SINAMICS GM150/SM150 configuration (4 days)
DR-SNM-PRJ

Description/learning target

The course is appropriate for design engineers, configuration engineers and sales personnel who plan the SINAMICS GM150/SM150. Training covers the fundamental physical relationships for the design of a drive system. Using the self-explanatory SIZER configuration tool, different applications of SINAMICS are calculated, and consolidated using exercises on PCs. Control functions are explained, and their associated conditions described. The various options for SINAMICS are also presented to permit derivation of their application.

Target group

Configuration engineers, project engineers, programmers

Requirements

Knowledge of drive and control technology

Content

- SINAMICS system overview
- Physical fundamentals for drive calculation
- Configuration of the SINAMICS GM150/SM150 cabinet components and their explanation: lines, EMC, emergency stop, interfaces
- SIZER configuration tool with example exercises for various applications
- Technical documentation: catalogs, configuration, instruction manuals
- Open-loop and closed-loop control functions
- Simple commissioning using the AOP30 operator panel
- Transformer/reactor
- Cooling plant
- High-voltage motor
- Medium-voltage cable

Description (continued)

SINAMICS GM150/SM150 commissioning and service/ diagnostics (5 days) DR-SNM-SI

Description/learning target

Technical information about planning, configuration, commissioning and troubleshooting is provided in this course. Following an introduction to the hardware and documentation of the drive system, detailed information is given about software functions, the parameter structure and function diagrams. Practical exercises on training equipment and the STARTER commissioning tool consolidate this knowledge.

Target group

Commissioning engineers, configuration engineers, service personnel

Requirements

Knowledge of drive and control technology

Content

- Components of the converters
  - Rectifiers, DC link, inverter
  - Air/water cooling
  - Terminal Board/Terminal Module
  - Controller and closed-loop control
  - Control of IGBTs
  - Common power supply
- Exercises on the simulator
  - Operation via AOP
  - Initial commissioning steps/test mode
  - Parameterization of converter with STARTER commissioning tool
  - Upload/download functions, learning function
  - Setpoint channel
- Control of converter using PROFIBUS DP
- Basic principle of closed-loop control (transvector control)
- Circuit diagrams
- Spare parts/maintenance

SINAMICS communication (3 days) DR-SN-COM

Description/learning target

The course is appropriate for programmers and service personnel who, as an extension to the DR-SNS-SI course, require further knowledge on the PROFIBUS and RS 232 communication interfaces for STARTER and AOP30, as well as I/O terminals.

The focal point is PROFIBUS with the PROFIDrive V3 profile with routing, teleservice, and the functionalities associated with the equidistant bus cycle, isochronous mode with servo applications, and direct OP access. Also described are the libraries of DriveES SIMATIC for cyclic and acyclic data exchange.

This knowledge is expanded by practical exercises using SINAMICS and SIMATIC S7 training cases with CPU 315-2 DP.

Target group

Commissioning engineers, configuration engineers, service personnel

Content

- Overview of the PROFIBUS DP, RS 232-PPI, CAN and I/O terminals: function, topology, parameterization
- Fundamentals of PROFIBUS with the PROFIDrive V3 profile
- Basic functions on the PROFIBUS: routing, teleservice and direct access
- PROFIBUS for Motion Control with: equidistant bus cycle and isochronous mode with Servo Control
- Cyclic and acyclic data exchange with DriveES SIMATIC components
- Fault diagnostics of the drive via the bus system
- Practical exercises on the SINAMICS S120 and SIMATIC S7 training cases with CPU 315-2DP

AOP30 cabinet operator panel training case

Application

This training case is used for the training and promotion of SINAMICS cabinet units.

When used as a stand-alone unit, it is possible to carry out offline demonstrations of commissioning and usability. Online operation is implemented by connecting to a SINAMICS cabinet unit or the SINAMICS S120 training case.

Design

- Cabinet operator panel with line connection
- Internal 24 V DC power supply
- Can be set upright for demonstration purposes
- Offline functions
- Online functions with SINAMICS CU320 Control Unit via RS 232 PPI.

Technical data

AOP30 cabinet operator panel training case	
Input voltage	230 V 1 AC
Degree of protection in accordance with DIN VDE 0470	IP00
Width	377 mm
Height	158 mm
Depth	277 mm
Weight, approx.	7 kg

Selection and ordering data

	Order No.
AOP30 cabinet operator panel training case TG-SN-AOP	**6ZB2480-0CA00**

8

Documentation

Overview

The documentation is supplied with the converter in PDF format on CD-ROM as standard. It consists of the following sections:

- Instruction manual
- List manual (parameter lists and function diagrams)
- Equipment-specific documents such as circuit diagrams, dimension drawings, arrangement diagrams and terminal diagrams
- Additional instruction manuals (comprehensive component descriptions)

The documentation is in English. Further languages can be ordered if required (see Description of options).

Attention: Due to US embargo restrictions, the documentation cannot be supplied on CD-ROM to countries such as Iran, Syria, Cuba, Sudan or Libya, as Adobe Acrobat Reader is not permitted in these countries for reading PDF documents. The documentation must be ordered in paper form when exporting converters to these countries (option **D15**).

SPARESonWeb

Overview

SPARESonWeb - Online spare parts catalog

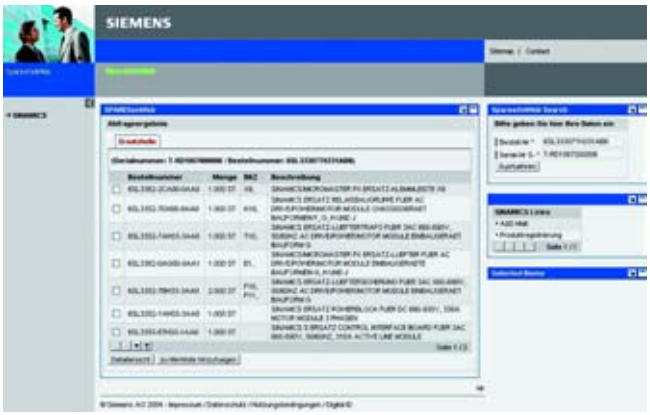

SPARESonWeb is a web-based tool for selecting the spare parts available for the SINAMICS system. After you have registered and entered the serial number and order number, the spare parts available for the relevant unit are displayed.

The delivery state for specific orders can be displayed for all shipped SINAMICS products.

http://workplace.automation.siemens.com/sparesonweb

Service & Support

In the face of harsh competition you need optimum conditions to keep ahead all the time:
a strong starting position, asophisticated strategy and team for the necessary support – in every phase.
Service & Support from Siemens provides this support with a complete range of different services for automation and drives.

In every phase: from planning and commissioning to maintenance and upgrading.

Our specialists know when and where to act to keep the productivity and cost-effectiveness of your system running in top form.

Online support

The comprehensive information system available round the clock via Internet ranging from Product Support and Service & Support services to Support Tools in the Shop.

http://www.siemens.com/automation/service&support

Technical support

Competent consulting in technical questions covering a wide range of customer-oriented services for all our products and systems.

Phone: +49 (0)180 50 50 222
Fax: +49 (0)180 50 50 223
E-Mail:
adsupport@siemens.com

In the United States, call toll-free:
Phone: +1 800 333 7421,
Fax: +1 423 262 2200
E-Mail: solutions.support@sea.siemens.com

In Canada, call:
Phone: +1 888 303 3353
E-Mail: cic@siemens.ca

In Asia:
Phone: +86 10 6475 7575,
Fax: +86 10 6474 7474
E-Mail:
adsupport.asia@siemens.com

Technical consulting

Support in the planning and designing of your project from detailed actual-state analysis, target definition and consulting on product and system questions right to the creation of the automation solution. [1)]

Optimization and upgrading

To enhance productivity and save costs in your project we offer high-quality services in optimization and upgrading. [1)]

Configuration and software engineering

Support in configuring and developing with customer-oriented services from actual configuration to implementation of the automation project. [1)]

Service on site

With Service On Site we offer services for startup and maintenance, essential for ensuring system availability.

In Germany
Phone: 0180 50 50 444 [1)]

In the United States, call toll-free:
Phone: +1 800 333 7421

In Canada, call:
Phone: +1 888 303 3353

Repairs and spare parts

In the operating phase of a machine or automation system we provide a comprehensive repair and spare parts service ensuring the highest degree of operating safety and reliability.

In Germany
Phone: 0180 50 50 448 [1)]

In the United States, call toll-free:
Phone: +1 800 241 4453

In Canada, call:
Phone: +1 888 303 3353

Product registration

To guarantee our servicing performance (availability of spare parts, hotline function, readiness of personnel), we offer you product registration for our SINAMICS drive equipment. Feedback on the final destination (installation/operation location) and naming of contact partners allows a servicing response without delay. The feedback can be made either using a feedback form (enclosed with each converter) or via the Internet:

http://www.siemens.com/reg

1) For country-specific telephone numbers go to our Internet site at: http://www.siemens.com/automation/service&support

Appendix

9

9/2	**Glossary**
9/4	**Siemens contacts worldwide**
9/5	**A&D online services** A&D in the WWW Product selection using the Interactive Catalog Easy shopping with the A&D Mall
9/6	**Index of order numbers**
9/7	**Subject index**
9/8	**Terms and conditions of sale and delivery**
9/9	**Export regulations**

Glossary

Overview

Active Infeed

Overall functionality of an infeed with → "Active Line Module" including the required additional components (filters, switching devices, computing power portion of a → "Control Unit", voltage detection, etc.).

For cabinet units, a → "Motor Module" can be used instead of the → "Active Line Module".

Active Line Module

This controlled, self-commutating feed/feedback unit (with IGBTs infeed/feedback device) supplies a constant DC link voltage for the → "Motor Modules".

Basic Infeed

Overall functionality of an infeed with → "Basic Line Module" including the required additional components (filters, switching devices, etc.).

Basic Line Module

Unregulated line infeed unit (diode bridge or thyristor bridge, without power feedback to the line) for rectifying the line voltage of the → "DC link".

CompactFlash card

Memory card for non-volatile storing of the drive software and of the corresponding parameters. The memory card can be plugged in the → "Control Unit" from outside.

Control Unit

Central control module: The feedforward and feedback control functions for several SINAMICS → "Line Modules" and/or → "Motor Modules" are implemented in this module.

DC link

The component of the converter (or converter system) that connects the input converter (rectifier) and the output converter (one or more converters).

With voltage source DC link converters like SINAMICS, a constant DC voltage is present in the DC link (rectified line voltage).

DRIVE-CLiQ

Abbreviation of "Drive Component Link with IQ".

Communication system for connecting the various components of a SINAMICS drive system, such as the → "Control Unit", the → "Line Modules", the → "Motor Modules", the → "motors" and the speed/position encoders.

The DRIVE-CLiQ hardware is based on the Industrial Ethernet standard and uses twisted-pair lines. The DRIVE-CLiQ line provides the transmit and receive signals and also the +24 V power supply.

Field weakening

The term field weakening designates the reduction of the magnetizing current of an electric motor to further increase the speed upon reaching the rated current.

Induction motor

The induction motor is an three-phase motor whose speed runs "behind" the synchronous speed.

Induction motors can be connected to the three-phase system either directly in a star or delta connection or via a converter.

In combination with a converter, the induction motor becomes a "variable speed drive system".

Further, generally used terms: Squirrel-cage induction motor, squirrel-cage motor.

See also → "synchronous motor"

Kinetic buffering

The kinetic buffering function (KIP) is a software function which can be used to buffer brief power failures (up to approx. 1 s or as long as the drive is still rotating). As a rule, kinetic buffering is only used for drives which are predominantly in the motoring mode. The prerequisite is that the driven load must have a sufficiently high moment of inertia, i.e. have sufficient kinetic energy. During the power failure, the KIP function initiates a motor switchover to the no-load operation or slightly regenerative operation (in order to cover the low losses of the motor and inverter). After the resumption of power supply, the drive system switches immediately back to normal motoring operation.

If kinetic buffering is to be used, it is important that the process can tolerate that the motor coasts down or decelerates during the power failure. For some applications involving multi-motor drives during the kinetic buffering phase, the speed relationships between the individual drives should be maintained so that the material web neither breaks nor is damaged. For cases such as these, it is only permissible to activate the kinetic buffering for one drive - normally the main drive. The reduced speed setpoints must be fed into the complete setpoint cascade.

Line Module

A line module is a power section which creates the DC link voltage for one or several → "Motor Modules", from a three-phase line voltage.

The following line module types are used for SINAMICS:

→ "Basic Line Module", and → "Active Line Module".

Overview (continued)

Motor Module

A motor module is a power section (DC-AC inverter) ensuring the power supply for the connected motor.

Power is supplied through the → "DC link" of the drive group.

A motor module must be connected to a → "Control Unit" via → "DRIVE-CLiQ". The controller and closed-loop control functions of the motor module are stored in the Control Unit.

Non-Siemens motor

A motor is designated as a non-Siemens motor if its motor data is not known to the drive unit, and it cannot be identified by means of its order number.

The motor data of an external motor is required for commissioning. It must be entered manually in the corresponding parameters.

Output reactor

Reactor (inductivity) in the converter or inverter output for reducing the capacitive charge/discharge currents of long power cables.

PROFIBUS

Field bus in accordance with the IEC 61158 standard, section 2 to 6.

PROFIdrive

This PROFIBUS profile was specified for speed- and position-controlled drives by the PROFIBUS under organization (PNO).

The PROFIdrive V3 profile is the latest version.

Sensor Module

Hardware module for evaluation of speed/position encoder signals.

Sine-wave filter

The sine-wave filter is connected to the converter or inverter output on the motor side. This filter has been designed for the generation of a converter output voltage with an almost sinusoidal shape. This method protects motors whose insulation system could be damaged by voltage peaks. In addition to this, a shielded power cable is not required in many cases. Sine-wave filters are often required in the chemical industry. e.g. to ensure that the permissible insulation voltage in the motor terminal box is not exceeded.

Synchronous motor

Synchronous motors run at the same frequency with which they are operated. They do not have a slip (like → "induction motors"). Synchronous motors require different feedforward and feedback control concepts depending on their design to ensure that they can be operated with converters.

Synchronous motors are distinguished by the following features:

- permanently/separately excited
- with/without damping cage
- with/without position encoder

Synchronous motors are used for different reasons:

- high drive dynamic response
- high overload capability
- high speed accuracy with exactly specified frequency (SIEMOSYN motors)

Terminal Module

Terminal extension module for snapping on the installation rail, for installation in the control cabinet.

With SINAMICS, there is the TM31 Terminal Module with analog and digital I/O terminals.

Siemens contacts worldwide

At

http://www.siemens.com/automation/partner

you can find details of Siemens contact partners worldwide responsible for particular technologies.

You can obtain in most cases a contact partner for

- technical support,
- spare parts/repairs,
- service,
- training,
- sales or
- consultation/engineering.

You start by selecting a

- country,
- product or
- sector.

By further specifying the remaining criteria you will find exactly the right contact partner with his/her respective expertise.

A&D in the WWW

A detailed knowledge of the range of products and services available is essential when planning and configuring automation systems. It goes without saying that this information must always be fully up-to-date.

The Siemens Automation and Drives Group (A&D) has therefore built up a comprehensive range of information in the World Wide Web, which offers quick and easy access to all data required.

Under the address

http://www.siemens.com/automation

you will find everything you need to know about products, systems and services.

Product selection using the Interactive Catalog

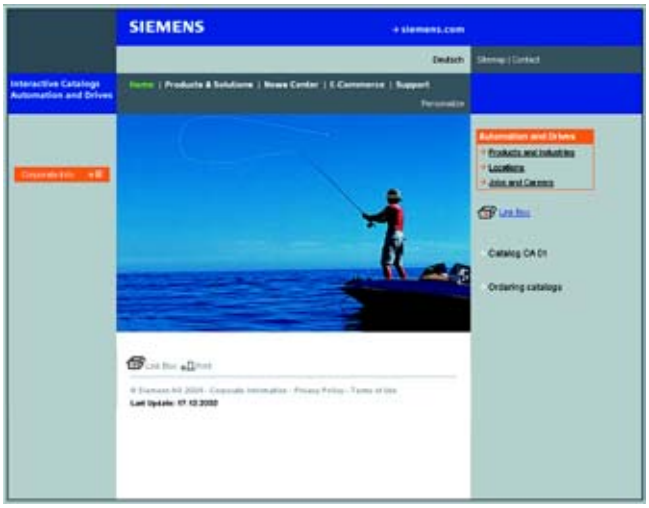

Detailed information together with convenient interactive functions:
The Interactive Catalog CA 01 covers more than 80,000 products and thus provides a full summary of the Siemens Automation and Drives product base.

Here you will find everything that you need to solve tasks in the fields of automation, switchgear, installation and drives.
All information is linked into a user interface which is easy to work with and intuitive.

After selecting the product of your choice you can order at the press of a button, by fax or by online link.

Information on the Interactive Catalog CA 01 can be found on the Internet under

http://www.siemens.com/automation/ca01

or on CD-ROM or DVD.

Easy shopping with the A&D Mall

The A&D Mall is the virtual department store of Siemens AG on the Internet. Here you have access to a huge range of products presented in electronic catalogs in an informative and attractive way.

Data transfer via EDIFACT allows the whole procedure from selection through ordering to tracking of the order to be carried out online via the Internet.

Numerous functions are available to support you.

For example, powerful search functions make it easy to find the required products, which can be immediately checked for availability. Customer-specific discounts and preparation of quotes can be carried out online as well as order tracking and tracing.

Please visit the A&D Mall on the Internet under:

http://www.siemens.com/automation/mall

Index of order numbers

		Part/Page
6AU1810-...	SIMOTION SCOUT	6/12
6RN7011-...	Static excitation units for slip-ring excitation	6/6
6RN703...	Static excitation units for brushless reverse field excitation	6/3
6SC8476-1...	Accessories for replacing phase modules, IGCTs, diodes	6/2
6SL3070-0AA00-0AG0	SIZER	7/2
6SL3072-0AA00-0AG0	STARTER	6/10
6SL3810-2L...	SINAMICS GM150 (IGBT) Air cooling	2/8, 2/9
6SL3815-2L...	SINAMICS GM150 (IGBT) Water cooling	2/10, 2/11
6SL3835-2LN4...	SINAMICS GM150 (IGCT) Water cooling	3/8
6SL3835-7NN4...	SINAMICS SM150 Water cooling	4/8
6SW1700-...	Drive ES	6/11
6SY8101-0AB5.	Accessories for grounding and short-circuiting the converter for commissioning and maintenance work	6/2
6ZB2480-0CA00	AOP30 cabinet operator panel training case	8/6
E86060-...	Training catalog	8/2

Subject index

	Part/Page
A	
Accessories	6
AOP30	2/7, 3/7
AOP30 cabinet operator panel training case	8/6
AOP30 operator panel	2/7, 3/7
B	
Benefits	
SINAMICS GM150 in IGBT version	2/2
SINAMICS GM150 in IGCT version	3/2
SINAMICS SM150	4/2
C	
Circuit-breakers	7/10
Circuit designs	
SINAMICS GM150 in IGBT version	2/4, 2/5
SINAMICS GM150 in IGCT version	3/4, 3/5
SINAMICS SM150	4/4, 4/5
Configuration	7
Cooling unit	7/8, 7/9
D	
Derating factors	
SINAMICS GM150 in IGBT version	2/19
SINAMICS GM150 in IGCT version	3/16
SINAMICS SM150	4/16
Description of options	5
Design	
SINAMICS GM150 in IGBT version	2/3
SINAMICS GM150 in IGCT version	3/2
SINAMICS SM150	4/2
Documentation	5/3, 8/7
Drive ES	6/11
F	
Function	
SINAMICS GM150 in IGBT version	2/6
SINAMICS GM150 in IGCT version	3/6
SINAMICS SM150	4/6
I	
Introduction	1
M	
Motors	7/13
O	
Options	5
SINAMICS GM150 in IGBT version	2/12 to 2/16
SINAMICS GM150 in IGCT version	3/8 to 3/13
SINAMICS SM150	4/8 to 4/13
Overview	
SINAMICS	1/6
SINAMICS GM150/SINAMICS SM150	1/9
SINAMICS GM150 in IGBT version	2/2
SINAMICS GM150 in IGCT version	3/2
SINAMICS SM150	4/2
Overview of connections	7/3, 7/4
Overview of interfaces	7/3 to 7/7
P	
Power cables	7/12
S	
Selection and ordering data	
SINAMICS GM150 in IGBT version	2/8 to 2/11
SINAMICS GM150 in IGCT version	3/8
SINAMICS SM150	4/8
Service & Support	8/8
Services and documentation	8
SIMATIC OP 177B	4/7
SIMATIC OP 177B operator panel	4/7
SINAMICS GM150 in IGBT version	2
SINAMICS GM150 in IGCT version	3
SINAMICS overview	1/6
SINAMICS SM150	4
SPARESonWeb online spare parts catalog	8/7
STARTER	6/10
Static excitation units	6/2 to 6/9
T	
Technical data	
SINAMICS GM150 in IGBT version	2/17 to 2/74
SINAMICS GM150 in IGCT version	3/14 to 3/18
SINAMICS SM150	4/14 to 4/18
Training	8/2
Transformers	7/10, 7/11

Terms and conditions of sale and delivery

By using this catalog you can acquire hardware and software products described therein from the Siemens AG subject to the following terms. Please note! The scope, the quality and the conditions for supplies and services, including software products, by any Siemens entity having a registered office outside of Germany, shall be subject exclusively to the General Terms and Conditions of the respective Siemens entity.

For customers with a seat or registered office in Germany

The "General Terms of Payment" as well as the "General Conditions for the Supply of Products and Services of the Electrical and Electronics Industry" shall apply.

For software products, the "General License Conditions for Software Products for Automation and Drives for Customers with a Seat or registered Office in Germany" shall apply.

For customers with a seat or registered office outside of Germany

The "General Terms of Payment" as well as the "General Conditions for Supplies of Siemens, Automation and Drives for Customers with a Seat or registered Office outside of Germany" shall apply.

For software products, the "General License Conditions for Software Products for Automation and Drives for Customers with a Seat or registered Office outside of Germany" shall apply.

General

The prices are in € (Euro) ex works, exclusive packaging.

The sales tax (value added tax) is not included in the prices. It shall be debited separately at the respective rate according to the applicable legal regulations.

In addition to the prices of products which include silver, plump, aluminum and/or copper, surcharges may be calculated if the respective limits of the notes are exceeded. The respective note (e.g. source: German newspaper "Handesblatt" in category "deutsche Edelmetalle" and "Metallverarbeiter") for silver ("verarbeitetes Silber"), plump ("Blei in Kabeln"), aluminum ("Aluminium in Kabeln") and copper ("Elektrolytkupfer", "DEL-Notiz") respectively, of the day the order or rather the on call order is received, is decisive for the calculation of the surcharges.

Surcharges of copper shall be calculated for Drives at a note ("DEL-Notiz") above EUR 225,00 / 100 kg and for chokes / transformers above EUR 150,00 / 100 kg.

Surcharges shall be charged based on the quantities of the materials which are contained in the relevant products.

Prices are subject to change without prior notice. We will debit the prices valid at the time of delivery.

The dimensions are in mm. Illustrations are not binding.

Insofar as there are no remarks on the corresponding pages, - especially with regard to data, dimensions and weights given - these are subject to change without prior notice.

Comprehensive Terms and Conditions of Sale and Delivery are available free of charge from your local Siemens business office under the following Order Nos.:

- 6ZB5310-0KR30-0BA0
  (for customers based in the Federal Republic of Germany)
- 6ZB5310-0KS53-0BA0
  (for customers based outside of the Federal Republic of Germany)

or download them from the Internet:
http://www.siemens.com/automation/mall
(Germany: A&D Mall Online-Help System)

Export regulations

The products listed in this catalog/price list may be subject to European/German and/or US export regulations.

Therefore, any export requiring a license is subject to approval by the competent authorities.

According to current provisions, the following export regulations must be observed with respect to the products featured in this catalog/price list:

AL	Number of the German Export List Products marked other than "N" require an export license. In the case of software products, the export designations of the relevant data medium must also be generally adhered to. Goods labeled with an "AL not equal to N" are subject to a European or German export authorization when being exported out of the EU.
ECCN	Export Control Classification Number Products marked other than "N" are subject to a reexport license to specific countries. In the case of software products, the export designations of the relevant data medium must also be generally adhered to. Goods labeled with an "ECCN not equal to N" are subject to a US re-export authorization.

Even without a label or with an "AL: N" or "ECCN: N", authorization may be required due to the final destination and purpose for which the goods are to be used.

The deciding factors are the AL or ECCN export authorization indicated on order confirmations, delivery notes and invoices.

Errors excepted and subject to change without prior notice.

A&D/VuL/En 17.03.05

Siemens AG
Automation and Drives
Large Drives
Postfach 47 43
90025 NUERNBERG
FEDERAL REPUBLIC OF GERMANY

Order No.
E86060-K5512-A101-A1-7600
KG 0706 2.0 E 184 En/622163
Printed in Germany

CD-ROM for catalog D 12

The enclosed CD-ROM for catalog D 12 · 2006 contains:

- Information on planning and configuration of SINAMICS GM150 and SINAMICS SM150
- Dimension drawings for the converters (PDF format)
- Dimension drawings for the high-voltage H-compact and H-compact PLUS motors (PDF format)
- Technical data for the high-voltage H-compact and H-compact PLUS motors (PDF format)
- Catalog D 12 (PDF format)

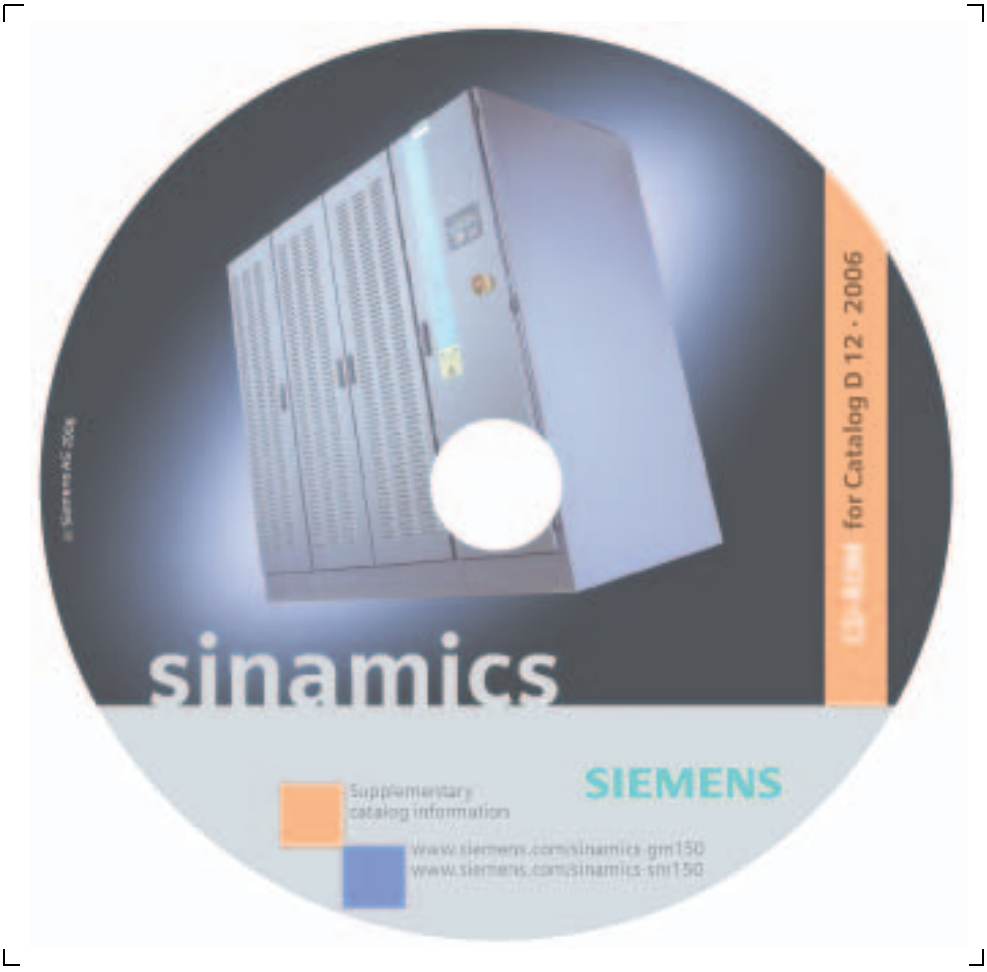

Hardware- and software requirements

- Intel Pentium 333 MHz or higher
- At least 128 Mbyte RAM
- Screen resolution 1024 x 768 pixels
- 4 x CD-ROM drive
- Windows 9x/NT 4.x/2000/XP
- Acrobat Reader
- Excel 2000
- Microsoft Internet Explorer version 5.5 and higher

Start

Insert the CD into the CD-ROM drive. The program starts automatically. If the AutoRun function is not activated in your system, please start the "start.hta" file from the CD-ROM in Windows Explorer.

If Excel is not installed on your PC, you can use the Excel viewer (xlviewer.exe) supplied on the CD-ROM.

Note

No programs have to be installed to view the information on this CD-ROM.

Catalogs of the
Automation and Drives Group (A&D)

Further information can be obtained from our branch offices listed in the appendix or at www.siemens.com/automation/partner

Automation and Drives	*Catalog*
Interactive catalog on CD-ROM and on DVD	
• The Offline Mall of Automation and Drives	CA 01

Automation Systems for Machine Tools	
SINUMERIK & SIMODRIVE	NC 60
SINUMERIK & SINAMICS	NC 61

Drive Systems	
Variable-Speed Drives	
SINAMICS G130 Drive Converter Chassis Units, SINAMICS G150 Drive Converter Cabinet Units	D 11
SINAMICS G110 Inverter Chassis Units	D 11.1
SINAMICS GM150/SINAMICS SM150 Medium-Voltage Converters	D 12
SINAMICS S120 Vector Control Drive System	D 21.1
SINAMICS S120 Servo Control Drive System	D 21.2
SINAMICS S150 Drive Converter Cabinet Units	D 21.3
Asynchronous Motors Standardline	D 86.1
DC Motors	DA 12
SIMOREG DC MASTER 6RA70 Digital Chassis Converters	DA 21.1
SIMOREG K 6RA22 Analog Chassis Converters	DA 21.2
SIMOREG DC MASTER 6RM70 Digital Converter Cabinet Units	DA 22
SIMOVERT PM Modular Converter Systems	DA 45
SIEMOSYN Motors	DA 48
MICROMASTER 410/420/430/440 Inverters	DA 51.2
MICROMASTER 411/COMBIMASTER 411	DA 51.3
SIMOVERT MASTERDRIVES Vector Control	DA 65.10
SIMOVERT MASTERDRIVES Motion Control	DA 65.11
Synchronous and asynchronous servomotors for SIMOVERT MASTERDRIVES	DA 65.3
SIMODRIVE 611 universal and POSMO	DA 65.4
Low-Voltage Three-Phase-Motors	
Squirrel-Cage Motors, Totally Enclosed, Fan-Cooled	M 11
Automation Systems for Machine Tools SIMODRIVE	NC 60
• Main Spindle/Feed Motors	
• Converter Systems SIMODRIVE 611/POSMO	
Automation Systems for Machine Tools SINAMICS	NC 61
• Main Spindle/Feed Motors	
• Drive System SINAMICS S120	
Drive and Control Components for Hoisting Equipment	HE 1

Electrical Installation Technology	
ALPHA Small Distribution Boards and Distribution Boards	ET A1
PDF: ALPHA 8HP Molded-Plastic Distribution System	*ET A3*
ALPHA FIX Terminal Blocks	ET A5
BETA Modular Installation Devices	ET B1
DELTA Switches and Socket Outlets	ET D1
GAMMA Building Management Systems	ET G1

Human Machine Interface Systems SIMATIC HMI	ST 80

Industrial Communication for Automation and Drives	*Catalog* IK PI

Low-Voltage	
Controls and Distribution – SIRIUS, SENTRON, SIVACON	LV 1
Controls and Distribution – Technical Information SIRIUS, SENTRON, SIVACON	LV 1 T
SIDAC Reactors and Filters	LV 60
SIVENT Fans	LV 65
SIVACON 8PS Busbar Trunking Systems	LV 70

Motion Control System SIMOTION	PM 10

Process Instrumentation and Analytics	
Field Instruments for Process Automation	FI 01
Measuring Instruments for Pressure, Differential Pressure, Flow, Level and Temperature, Positioners and Liquid Meters	
PDF: Indicators for panel mounting	*MP 12*
SIREC Recorders and Accessories	MP 20
SIPART, Controllers and Software	MP 31
SIWAREX Weighing Systems	WT 01
Continuous Weighing and Process Protection	WT 02
Process Analytical Instruments	PA 01
PDF: Process Analytics, Components for the System Integration	*PA 11*

SIMATIC Industrial Automation Systems	
SIMATIC PCS Process Control System	ST 45
Products for Totally Integrated Automation and Micro Automation	ST 70
SIMATIC PCS 7 Process Control System	ST PCS 7
Add-ons for the SIMATIC PCS 7 Process Control System	ST PCS 7.1
Migration solutions with the SIMATIC PCS 7 Process Control System	ST PCS 7.2
pc-based Automation	ST PC
SIMATIC Control Systems	ST DA

SIMATIC Sensors	FS 10

SIPOS Electric Actuators	
Electric Rotary, Linear and Part-turn Actuators	MP 35
Electric Rotary Actuators for Nuclear Plants	MP 35.1/.2

Systems Engineering	
Power supplies SITOP power	KT 10.1
System cabling SIMATIC TOP connect	KT 10.2

System Solutions

Applications and Products for Industry are part of the interactive catalog CA 01

TELEPERM M Process Control System	
PDF: AS 488/TM automation systems	*PLT 112*

PDF: These catalogs are only available as pdf files.

The information provided in this catalog contains descriptions or characteristics of performance which in case of actual use do not always apply as described or which may change as a result of further development of the products. An obligation to provide the respective characteristics shall only exist if expressly agreed in the terms of contract. Availability and technical specifications are subject to change without notice.

Token fee € 5.00

Siemens AG

Automation and Drives
Large Drives
Postfach 4743
90025 NUERNBERG
FEDERAL REPUBLIC OF GERMANY

http://www.siemens.com/sinamics

Order No. E86060-K5512-A101-A1-7600