SIEMENS

Preferred Series
215 kW to 1500 kW

Catalog DA 12.2 · 1999/2000

DC DRIVES

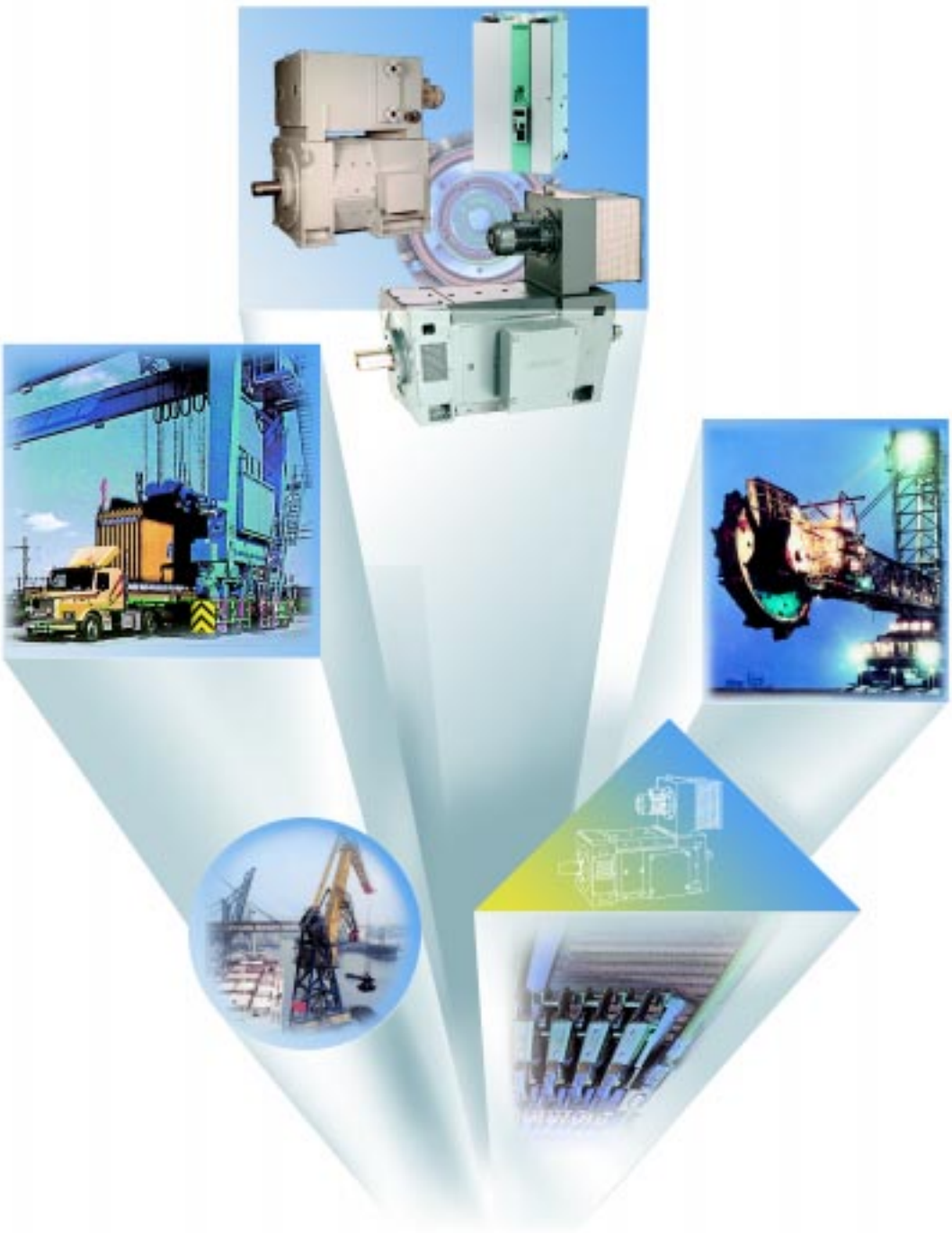

Variable-speed drives and equipment in the DA catalog series

DA 12 DC Motors for Variable-Speed Drives

DA 21 SIMOREG Chassis Converters for Variable-Speed DC Drives

DA 22 SIMOREG Converter Cabinet Units for Variable-Speed DC Drives

DA 45 SIMOVERT PM Modular Converters Systems for Multi-Motor Drives

DA 48 SIEMOSYN Motors Synchronous Motors for Variable-Speed Drives

DA 62 SIMOVERT A Current-Source DC Link Converters for Variable-Speed AC Drives

DA 63 SIMOVERT MV Medium-Voltage Drives

DA 64 MICROMASTER, MIDIMASTER Voltage-Source DC Link Converters for Variable-Speed AC Drives

DA 65 SIMOVERT MASTERDRIVES Voltage-Source DC Link Converters for Variable-Speed AC Drives

DA 66 SIMOVERT P Voltage-Source DC Link Converters for Variable-Speed AC Drives

DA 94 SITOR Semiconductors-Protection Fuses for Variable-Speed Drives

DA 99 SIMADYN D Control System for Variable-Speed Drives

SIEMENS

DC Drives

Preferred Series
215 kW to 1500 kW

Catalog DA 12.2 · 1999/2000

Introduction 1

Technical Features 2

Selection- and Ordering Data 3

Engineering Instructions 4

Dimension Drawings 5

Appendix A

Please note:

The technical data is provided for general information only.
When mounting, operating and servicing the equipment, the Instruction Manuals and the information provided on the products themselves must be observed.

All of the product names used are trademarks or product names of Siemens AG or other companies.

- We reserve the right to revise technical data, selection- and ordering data (Order Nos.), accessories and the availability.
- All of the dimensions in this Catalog are in mm.

© Siemens AG 1999

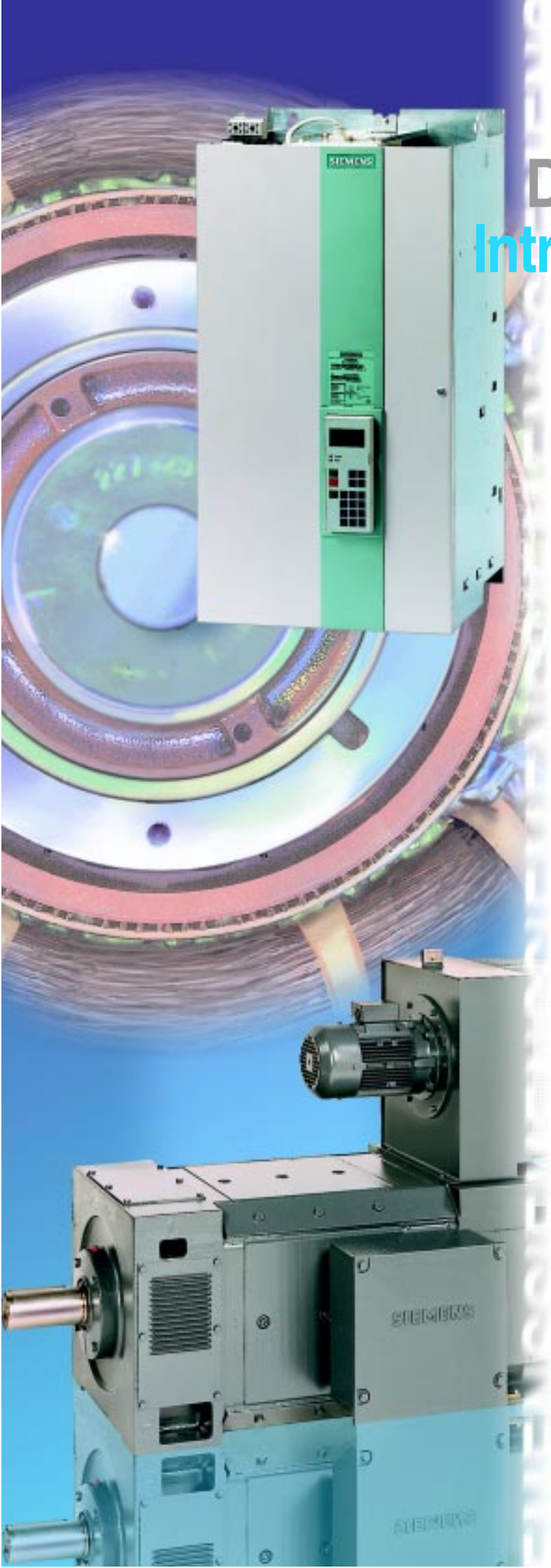

DC Drives
Introduction

1

1/2 Applications

1/4 Recommendations for Drive Selection

1/5 Overview of Motor Types and Rated Data

Siemens DC drives distinguish themselves as follows:

- Their excellent steady-state and dynamic control response
- Their wide control range with high control precision
- The high efficiency of the complete drive system

Our modular DC motors have proven themselves together with drive converters as variable-speed drives in almost all sectors of industry.

They help to guarantee that all important competitive edge and efficiency – within Germany and internationally.

.

Our DC drives are the optimum solution, no matter which functions have to be fulfilled in drive-, power- or process engineering,

for example

- **in mining**
- **in rolling mills**
- **in the printing industry**
- **in the textile- and man-made fiber industries**
- **for cranes**
- **in basic industry**

Siemens DC Drives:

Rugged
Dynamic
Economical.

DC motors are, just like before, a high quality alternative to three-phase motors.

Together with SIMOREG drive converters, they form optimum, variable-speed drives for a wide range of industries, and are used wherever favorably-priced technology and high availability are demanded.

They have the following outstanding features:

- High power density with small motor dimensions
- High thermal reserves for continuous duty and overload thanks to the DURIGNIT insulating system
- High efficiency for low losses
- High concentricity and mechanical balance quality
- Low noise
- Excellent mechanical rigidity
- Low weight
- Long brush lifetimes using the optimized commutation system
- High operational reliability and availability as a result of extensive diagnostic functionality when fed from SIMOREG drive converters.

SIMOREG drive converters: High dynamic performance, optimum communications capability, also for complex technological applications

The main features of SIMOREG drive converters include:

- Unified, complete series from 15 to 2000 A
- 2 powerful 16-bit microprocessors
- High dynamic performance; the current- and torque rise times are less than 10 ms as a result of the current pre-control
- Suitable for both complex drive tasks as well as standard applications; parallel interface for the configurable T400 technology module
- Service- and bus interfaces integrated in the basic unit
- Fast commissioning
- User-friendly service
- PROFIBUS capability using the communications module
- High degree of user friendliness with the optional plain text operator panel

This catalog is designed to help you select the optimum DC drives and system components for your application.

Refer to Catalog DA 12.1 "DC Drives Preferred Series up to 500 kW" and Catalog DA 12 "DC Motors for Variable-Speed Drives" for DC motors with lower outputs.

Additional details and information on the drive converters are included in the Catalogs DA 21 (Chassis Converters) and DA 22 (Static Converter Cabinet Units).

Recommendations for drive selection

These "Recommendations for drive selection" guide you step-by-step through Catalog DA 12.2

1

Determine the required **product profile,**	Supply voltage Duty Degree of protection Speed range Output Type of construction		3-ph. 400, 500 or 690 V 50/60 Hz, 1 quadrant/4 quadrant IP ..... n = ... RPM P = ... kW IM **Page 2/2**
Installation conditions	Ambient temperature Installation altitude	≤40 °C ≤1000 m	Ambient temperature >40 °C Installation altitude >1000 m Determining the factors for output- and speed change **Motors: Page 4/2** **Drive converters:** **Pages 2/4 to 2/7**
Determine the rated armature voltage	Supply configuration 3 AC 50/60 Hz 400 V 3 AC 50/60 Hz 400 V 3 AC 50/60 Hz 500 V 3 AC 50/60 Hz 500 V 3 AC 50/60 Hz 690 V 3 AC 50/60 Hz 690 V	Duty 1Q 4Q 1Q 4Q 1Q 4Q	Rated armature voltage DC 470 V DC 420 V DC 600 V DC 520 V DC 810 V DC 720 V
Determine the motor Order No.	Determine the motor Order No. according to the "Selection- and Ordering Data"		**Pages 3/2 to 3/23**
Adapt the speed if necessary $n = n_N$	$n < n_N$ Speed adapted via armature control $V_a = V_{an} \cdot n / n_N$ $P = P_N \cdot n / n_N$		$n > n_N$ Speed adapted via field weakening V_a = constant P = constant
Complete the motor Order No.	Order codes for special versions		**Pages 3/24 to 3/26**
Select the SIMOREG drive converter and the supply components	Determine the Order No. of the drive converter and the supply components according to the "Selection- and Ordering Data" (Motor/drive converter assignment)		**Pages 3/2 to 3/23**

Overview of motor types and rated data

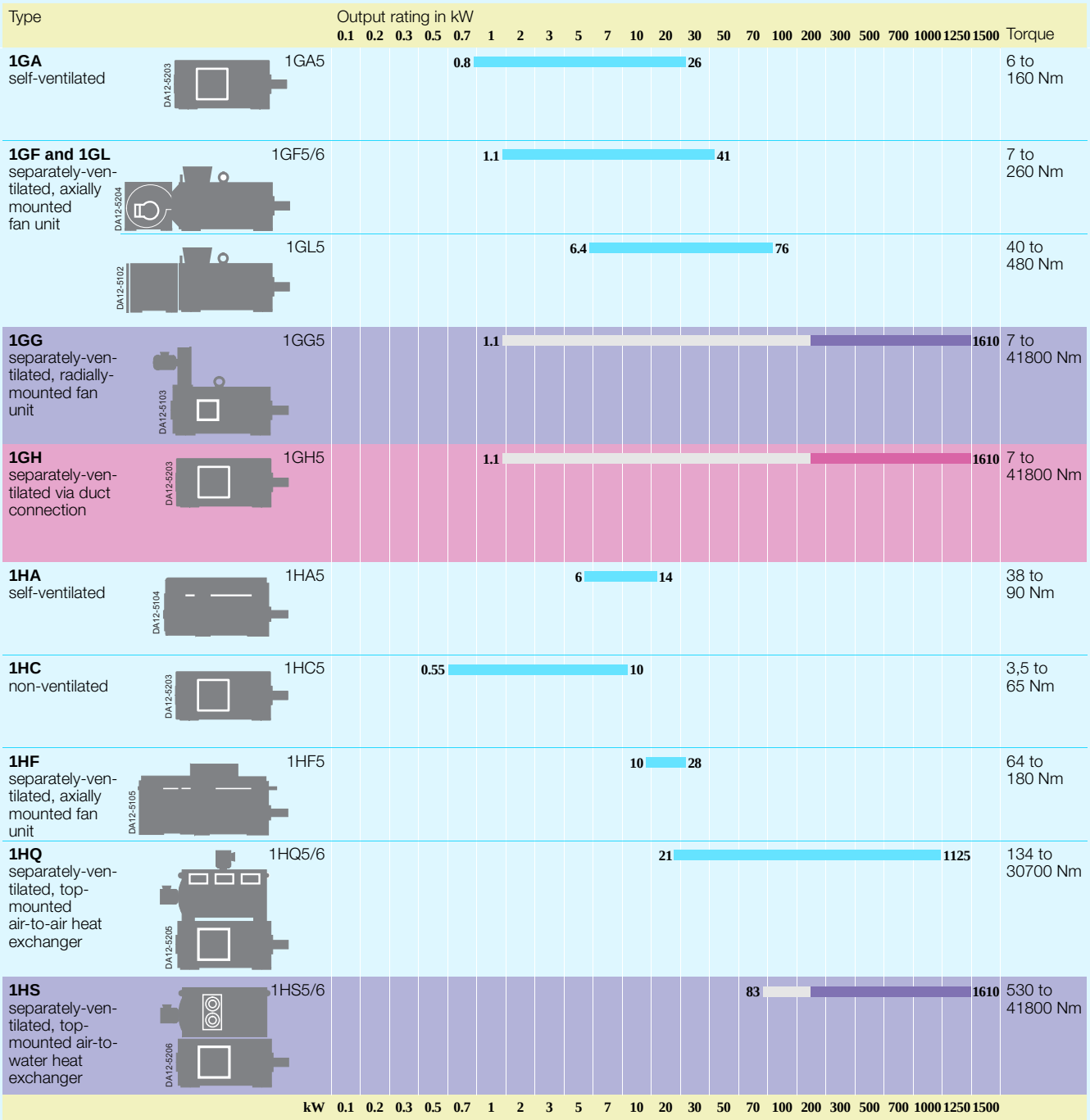

This Catalog DA 12.2 only describes motors, types 1GG, 1GH and 1HS above 240 kW. For lower outputs of these and other types, refer to Catalogs DA 12 and DA 12.1.

DC Drives
Technical Features

2/2 **Motors**
- 2/2 Design
- 2/2 Mounted Components
- 2/2 Operation and Diagnostics
- 2/3 Brush Materials, Commutation
- 2/3 Noise
- 2/3 Bearings
- 2/3 Standards, Specifications, Requirements

2/4 **Drive Converters**
- 2/4 For Single-Quadrant Operation
- 2/6 For Four-Quadrant Operation

2

Design of 1G.5 Motors

The open, separately-ventilated, 1G.5 and 1HS5 DC motors are fully laminated and compensated. They represent the optimum solution for every drive application as a result of their modular design regarding terminal box and separately-driven fan mounting.

	Standard	Option Description	Code
Design			
Type of construction	IM B3	IM B35 (refer to the Selection- and Ordering Data) [1]	
Degree of protection	IP 23	IP 54/IC 37 for 1GH	–
Field voltage	310 V	–	–
Terminal box arrangement	right	Other positions	Page 3/24
Separately-driven fan mounting	• 1GG: top, NDE • 1GH: external	Other mounting types –	Page 3/24
Air flow direction	NDE-DE	DE-NDE	K64
Air filter for 1GG	–	Dry-type filter	G14
Duct connection for 1GH	On one-side, NDE right	Different connection types	Page 3/24
Paint finish	Anthracite RAL 7016	• primer only • non-standard paint finish RAL 7016	K24 L53
Bearings	roller bearings with regreasing device	–	
Vibration severity grade	N	R	K01
Shaft end	With keyway acc. DIN 6885; Sheet 1 full-key balancing	–	
Mounted equipment			
Tachometers/encoders	–	• Tachometers • Pulse encoders	Page 3/25 Page 3/25
Operation and diagnostics			
Extended field control range	$n_F = 1.15\ n_N$	• $n_F > 1.15\ n_N$ to $1.7\ n_N$ • $n_F > 1.7\ n_N$	C05 C06
Anti-condensation heating	–	230 V AC	K45
Visual brush monitoring	–	Servicing covers with inspection window	L73
Brush length, limit value	–	Microswitch, floating signal	A06 [1] [2]
Temperature rise limit value	–	Thermistor motor protection with PTC thermistor • for trip • for alarm und trip	 A11 [2] A12 [2]
Temperature rise, continuous	–	Measurement using a temperature sensor KTY84-130	A23 [2]
Air flow for 1GG	–	Vent-captor air flow monitor • V_B = 230 V AC relay output • V_B = 24 V DC transistor output	 A09 A97 [2]

For additional options and information, refer to Pages 3/24 and 3/25

1) Possible up to frame size 400.

2) These functions can all be evaluated in the 6RA70 SIMOREG unit with terminal extension.

Brush materials, commutation

Practically spark-free commutation when fed from drive converters is achieved as a result of the optimum motor design, even in the overload range. This results in extremely long brush lifetimes.

Even critical applications can be handled by selecting suitable brush materials.

Noise levels

The noise levels of the motors are determined in accordance with DIN EN 21 680 and they lie far below the values permitted according to EN 60 034-9. This is achieved as a result of the mechanical design and by optimizing the magnetic circuit and the separately-driven fan.

Noise levels can be provided on request.

Bearings

The motor bearings are provided with regreasing devices. The locating bearing is at the non drive end.

Standards, specifications, requirements

The motors comply with all of the relevant standards and specifications, refer to the adjacent table.

As a result of the fact that in many countries the national regulations have been completely harmonized with the international IEC 60 034-1 recommendation, there are no longer any differences with respect to cooling medium temperatures, insulation classes and maximum temperature rises.

Title	DIN/VDE	EN	IEC
General specifications for rotating electrical machines	DIN VDE 0530 Part 1	EN 60 034-1	IEC 60 034-1
Terminal designations and direction of rotation for electrical machines	DIN VDE 0530 Part 8	EN 60 034-8	IEC 60 034-8
Types of construction of rotating electrical machines	DIN VDE 0530 Part 7	EN 60 034-7	IEC 60 034-7
Cooling types for rotating electrical machines	DIN VDE 0530 Part 6	EN 60 034-6	IEC 60 034-6
Degrees of protection of rotating electrical machines	DIN VDE 0530 Part 5	EN 60 034-5	IEC 60 034-5
Vibration severity of rotating electrical machines	DIN VDE 0530 Part 14	EN 60 034-14	IEC 60 034-14
Noise limit values of rotating electrical machines	DIN VDE 0530 Part 9	EN 60 034-9	IEC 60 034-9
Cylindrical shaft ends for electrical machines	DIN 748 Part 3	–	IEC 60 072

Drive converters for single-quadrant operation

Order No.		6RA70..–6DS22–0			6RA7090–6GS22–0
		85	87	91	
Rated supply voltage, armature	V	3-ph. 400 AC (+15 %/–20 %)			3-ph. 575 AC (+10 %/–15 %)
Rated input current, armature [1]	A	498	705	995	829
Air flow	m^3/h	570	1300		1300
Fan noise	dBA	63	83		83
Rated supply voltage – electronics power supply	V	2-ph. 380 to 460 V AC (+15%/–25%); I_N = 1 A (–35% for 1 min) or 1-ph. 190 to 230 V AC (+15%/–25%); I_N = 2 A			
– field	V	2-ph. 400 AC (+15 %/–20 %)			2-ph. 400 AC (+15 %/–20 %)
– fan	V	3-ph. AC 400 (15 %), 0.24 A, 75 W	3-ph. AC 400 (15 %), 1.1 A, 570 W		3-ph. AC 400 (±15 %), 1.1 A, 570 W
Rated frequency	Hz	The converters automatically adapt themselves to the frequency of the connected supply voltage in a range from 45 to 65 Hz (armature and field are independent of one another)			
Rated DC voltage	V	485			690
Rated DC current	A	600	850	1200	1000
Overload capacity		max. 150% rated DC current			max. 150% rated DC current
Rated output	kW	291	412	582	690
Power loss at the rated DC current (approx.)	W	1798	2420	4525	4130
Rated DC current, field	A	25	30		30
Rated DC voltage, field	V	max. 325			max. 325
Operational ambient temperature [2]	°C	0 to 40 at I_{rated} force-ventilated			0 to 40 at I_{rated} force-ventilated
Storage- and transport temperature	°C	–25 to +70			–25 to +70
Installation altitude above sea level [3]		≤1000 m at rated DC current			≤1000 m at rated DC current
Control stability [4]		Δ_n = 0.006 % of the motor rated speed, is valid for pulse encoder operation and digital setpoint. Δ_n = 0.1 % of the motor rated speed, is valid for analog tachometer and analog setpoint.			
Humidity rating	DIN 40 040 SN 26556	F			F
Degree of protection	DIN 40 050 IEC 60 144	IP 00			IP 00
Dimensions		refer to dimension drawings, Section 5			refer to dimension drawings, Section 5
Weight	approx. kg	30	40	80	80

1) Values are valid for the rated DC output current.

2) **Load values (DC current) as a function of the cooling-medium temperature**

Ambient- or cooling-medium temperature	Change in the load values (de-rating percentage "a") for non-ventilated converters	for force-ventilated converters
+40 °C		– 0 %
+45 °C	0 %	– 5 %
+50 °C	– 6 %	–10 %
+55 °C	–11 %	(–15 %)*)
+60 °C	–18 %	

*) When operating drive converters >400 A with forced air cooling, inspite of the de-rating, an ambient- or cooling medium temperature of 50°C is only permissible, if the rated supply voltage for the drive converter fan is clearly within the restricted tolerance range of 400 V +10%–15%.

3) The adjacent diagram shows the load values as a function of the installation altitude:
Curve b1: De-rating factor of the load values (DC current) for installation altitudes above 1000 m
Curve b2: De-rating factor for the rated armature supply voltage for installation altitudes above 2000 m.

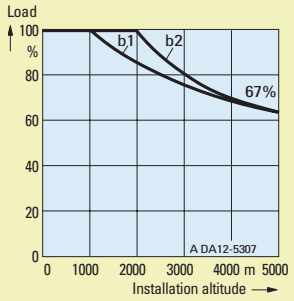

4) Conditions:
The control stability is referred to the rated motor speed and is valid when the SIMOREG unit is in the warm operating condition. The following conditions must be satisfied:
- Temperature changes of ±10 °K
- Line supply voltage changes of +10 %/–5 % of the rated input voltage
- Load changes up to 100% of the maximum torque
- Temperature coefficient of the temperature-compensated tachometer, 0.15 % per 10 °K (only applies to analog tachometers)
- Constant setpoint

Drive converters for single-quadrant operation

Order No.		6RA70 88–6KS22–0	6RA70..–..S22–0					
			93–4D	95–4D	93–4G	95–4G	93–4K	95–4K
Rated supply voltage, armature	V	3-ph. 690 AC (+10 %/–15 %)	3-ph. 400 AC (+15 %/–20 %)		3-ph. 575 AC (+10 %/–15 %)		3-ph. AC 690 (+10 %/–15 %)	
Rated input current, armature [1]	A	788	1326	1658	1326	1658	1244	1658
Air flow	m^3/h	1300	1400					
Fan noise	dBA	83	83					
Rated supply voltage – electronics power supply	V	2-ph. 380 to 460 V AC (+15%/–25%); I_N = 1 A (–35% for 1 min) or 1-ph. 190 to 230 V AC (+15%/–25%); I_N = 2 A						
– field	V	2-ph. 400 AC (+15 %/–20 %)	2-ph. 400 AC (+15 %/–20 %)					
– fan	V	3-ph. 400 AC (±15 %) 1.1 A, 570 W	3-ph. 400 AC (±15 %) 1.1 A, 570 W					
Rated frequency	Hz	The converters automatically adapt themselves to the frequency of the connected supply voltage in a range from 45 to 65 Hz (armature and field are independent of one another)						
Rated DC voltage	V	830	485		690		830	
Rated DC current	A	950	1600	2000	1600	2000	1500	2000
Overload capacity		max. 150% rated DC current	max. 150% rated DC current					
Rated output	kW	789	776	970	1104	1380	1245	1650
Power loss at the rated DC current (approx.)	W	4380	5710	6810	5942	7349	6706	8190
Rated DC current, field	A	30	40					
Rated DC voltage, field	V	max. 325	max. 325					
Operational ambient temperature [2]	°C	0 to 40 at I_{rated} force-ventilated	0 to 40 at I_{rated} force-ventilated					
Storage- and transport temperature	°C	–25 to +70	–25 to +70					
Installation altitude above sea level [3]		≤1000 m at rated DC current	≤1000 m at rated DC current					
Control stability [4]		Δ_n = 0.006 % of the motor rated speed, is valid for pulse encoder operation and digital setpoint. Δ_n = 0.1 % of the motor rated speed, is valid for analog tachometer and analog setpoint.						
Humidity rating	DIN 40 040 SN 26556	F	F					
Degree of protection	DIN 40 050 IEC 60 144	IP 00	IP 00					
Dimensions		refer to dimension drawings, Section 5	refer to dimension drawings, Section 5					
Weight	approx. kg	80	125					

1) Values are valid for the rated DC output current.

2) **Load values (DC current) as a function of the cooling-medium temperature**

Ambient- or cooling-medium temperature	Change in the load values (de-rating percentage "a") for non-ventilated converters	for force-ventilated converters
+40 °C		– 0 %
+45 °C	0 %	– 5 %
+50 °C	– 6 %	–10 %
+55 °C	–11 %	(–15 %)*)
+60 °C	–18 %	

*) When operating drive converters >400 A with forced air cooling, inspite of the de-rating, an ambient- or cooling medium temperature of 50°C is only permissible, if the rated supply voltage for the drive converter fan is clearly within the restricted tolerance range of 400 V +10%–15%.

3) The adjacent diagram shows the load values as a function of the installation altitude:
Curve b1: De-rating factor of the load values (DC current) for installation altitudes above 1000 m
Curve b2: De-rating factor for the rated armature supply voltage for installation altitudes above 2000 m.

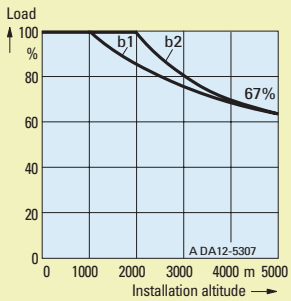

4) Conditions:
The control stability is referred to the rated motor speed and is valid when the SIMOREG unit is in the warm operating condition. The following conditions must be satisfied:
- Temperature changes of ±10 °K
- Line supply voltage changes of +10 %/–5 % of the rated input voltage
- Load changes up to 100% of the maximum torque
- Temperature coefficient of the temperature-compensated tachometer, 0.15 % per 10 °K (only applies to analog tachometers)
- Constant setpoint

Drive converters for four-quadrant operation

Order No.		6RA70..–6DV62–0			6RA70..–6GV62–0	
		85	87	91	87	90
Rated supply voltage, armature	V	3-ph. 400 AC (+15 %/–20 %)			3-ph. 575 AC (+10 %/–15 %)	
Rated input current, armature [1]	A	498	705	995	705	912
Air flow	m^3/h	570		1300	570	1300
Fan noise	dBA	63		83	63	83
Rated supply voltage – electronics power supply	V	2-ph. 380 to 460 V AC (+15%/–25%); I_N = 1 A (–35% for 1 min) or 1-ph. 190 to 230 V AC (+15%/–25%); I_N = 2 A				
– field	V	2-ph. 400 AC (+15 %/–20 %)			2-ph. 400 AC (+15 %/–20 %)	
– fan	V	3-ph. 400 AC(±15 %) 0.24 A, 75 W		3-ph. AC 400 (±15 %) 1.1 A, 570 W	3-ph. 400 AC (±15 %) 0.24 A, 75 W	3-ph. 400 AC(±15 %) 1.1 A, 570 W
Rated frequency	Hz	The converters automatically adapt themselves to the frequency of the connected supply voltage in a range from 45 to 65 Hz (armature and field are independent of one another)				
Rated DC voltage	V	420			600	
Rated DC current	A	600	850	1200	850	1100
Overload capacity		max. 150% rated DC current			max. 150% rated DC current	
Rated output	kW	252	357	504	510	660
Power loss at the rated DC current (approx.)	W	1800	2420	4525	2780	4515
Rated DC current, field	A	25	30		30	
Rated DC voltage, field	V	max. 325			max. 325	
Operational ambient temperature [2]	°C	0 to 40 at I_{rated} force-ventilated			0 to 40 at I_{rated} force-ventilated	
Storage- and transport temperature	°C	–25 to +70			–25 to +70	
Installation altitude above sea level [3]		≤1000 m at rated DC current			≤1000 m at rated DC current	
Control stability [4]		Δ_n = 0.006 % of the motor rated speed, is valid for pulse encoder operation and digital setpoint. Δ_n = 0.1 % of the motor rated speed, is valid for analog tachometer and analog setpoint.				
Humidity rating	DIN 40 040 SN 26556	F			F	
Degree of protection	DIN 40 050 IEC 60 144	IP 00			IP 00	
Dimensions		refer to dimension drawings, Section 5			refer to dimension drawings, Section 5	
Weight	approx. kg	30	45	85	45	85

1) Values are valid for the rated DC output current.

2) **Load values (DC current) as a function of the cooling-medium temperature**

Ambient- or cooling-medium temperature	Change in the load values (de-rating percentage "a") for non-ventilated converters	for force-ventilated converters
+40 °C		– 0 %
+45 °C	0 %	– 5 %
+50 °C	– 6 %	–10 %
+55 °C	–11 %	(–15 %)*)
+60 °C	–18 %	

*) When operating drive converters >400 A with forced air cooling, inspite of the de-rating, an ambient- or cooling medium temperature of 50°C is only permissible, if the rated supply voltage for the drive converter fan is clearly within the restricted tolerance range of 400 V +10%–15%.

3) The adjacent diagram shows the load values as a function of the installation altitude:
Curve b1: De-rating factor of the load values (DC current) for installation altitudes above 1000 m
Curve b2: De-rating factor for the rated armature supply voltage for installation altitudes above 2000 m.

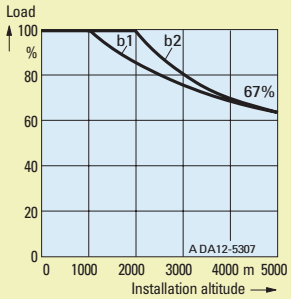

4) Conditions:
The control stability is referred to the rated motor speed and is valid when the SIMOREG unit is in the warm operating condition. The following conditions must be satisfied:
- Temperature changes of ±10 °K
- Line supply voltage changes of +10 %/–5 % of the rated input voltage
- Load changes up to 100% of the maximum torque
- Temperature coefficient of the temperature-compensated tachometer, 0.15 % per 10 °K (only applies to analog tachometers)
- Constant setpoint

Order No.		6RA70..–..V62–0		6RA70..–..V62–0					
		86–6K	90–6K	93–4D	95–4D	93–4G	95–4G	93–4K	95–4K
Rated supply voltage, armature	V	3-ph. 690 AC (+10 %/–15 %)		3-ph. 400 AC (+15 %/–20 %)		3-ph. 575 AC (+10 %/–15 %)		3-ph. 690 AC (+10 %/–15 %)	
Rated input current, armature [1]	A	630	829	1326	1658	1326	1658	1244	1658
Air flow	m^3/h	570	1300	1400					
Fan noise	dBA	63	83	83					
Rated supply voltage – electronics power supply	V	2-ph. 380 to 460 V AC (+15%/–25%); I_N = 1 A (–35% for 1 min) or 1-ph. 190 to 230 V AC (+15%/–25%); I_N = 2 A							
– field	V	2-ph. 400 AC (+15 %/–20 %)		2-ph. 400 AC (+15 %/–20 %)					
– fan	V	3-ph. 400 AC (±15 %) 0.24 A, 75 W	3 400 AC (±15 %) 1.1 A, 570 W	3-ph. 400 AC (±15 %) 1.1 A, 570 W					
Rated frequency	Hz	The converters automatically adapt themselves to the frequency of the connected supply voltage in a range from 45 to 65 Hz (armature and field are independent of one another)							
Rated DC voltage	V	725		420		600		725	
Rated DC current	A	760	1000	1600	2000	1600	2000	1500	2000
Overload capacity		max. 150% rated DC current		max. 150% rated DC current					
Rated output	kW	551	725	672	840	960	1200	1088	1450
Power loss at the rated DC current (approx.)	W	2850	4605	5708	6810	5942	7349	6706	8190
Rated DC current, field	A	30		40					
Rated DC voltage, fieldd	V	max. 325		max. 325					
Operational ambient temperature [2]	°C	0 to 40 at I_{rated} force-ventilated		0 to 40 at I_{rated} force-ventilated					
Storage- and transport temperature	°C	–25 to +70		–25 to +70					
Installation altitude above sea level [3]		≤1000 m at rated DC current		≤1000 m at rated DC current					
Control stability [4]		Δ_n = 0.006 % of the motor rated speed, is valid for pulse encoder operation and digital setpoint. Δ_n = 0.1 % of the motor rated speed, is valid for analog tachometer and analog setpoint.							
Humidity rating	DIN 40 040 SN 26556	F		F					
Degree of protection	DIN 40 050 IEC 60 144	IP 00		IP 00					
Dimensions		refer to dimension drawings, Section 5		refer to dimension drawings, Section 5					
Weight	approx. kg	45	85	145					

1) Values are valid for the rated DC output current.

2) **Load values (DC current) as a function of the cooling-medium temperature**

Ambient- or cooling-medium temperature	Change in the load values (de-rating percentage "a") for non-ventilated converters	for force-ventilated converters
+40 °C		– 0 %
+45 °C	0 %	– 5 %
+50 °C	– 6 %	–10 %
+55 °C	–11 %	(–15 %)*)
+60 °C	–18 %	

*) When operating drive converters >400 A with forced air cooling, inspite of the de-rating, an ambient- or cooling medium temperature of 50°C is only permissible, if the rated supply voltage for the drive converter fan is clearly within the restricted tolerance range of 400 V +10%–15%.

3) The adjacent diagram shows the load values as a function of the installation altitude:
Curve b1: De-rating factor of the load values (DC current) for installation altitudes above 1000 m
Curve b2: De-rating factor for the rated armature supply voltage for installation altitudes above 2000 m.

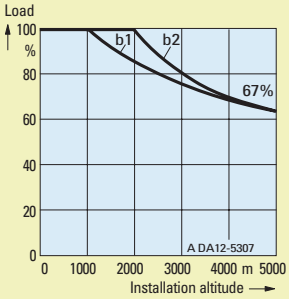

4) Conditions:
The control stability is referred to the rated motor speed and is valid when the SIMOREG unit is in the warm operating condition. The following conditions must be satisfied:
- Temperature changes of ±10 °K
- Line supply voltage changes of +10 %/–5 % of the rated input voltage
- Load changes up to 100% of the maximum torque
- Temperature coefficient of the temperature-compensated tachometer, 0.15 % per 10 °K (only applies to analog tachometers)
- Constant setpoint

DC Drives
Selection- and Ordering Data

3/2 **Motor-drive converter assignment**
- Rated supply voltage 3-ph. 400 V AC
  Rated armature voltage 470 V DC,
  1 quadrant operation

3/6
- Rated supply voltage 3-ph. 400 V AC
  Rated armature voltage 420 V DC,
  4 quadrant operation

3/10
- Rated supply voltage 3-ph. 500 V AC
  Rated armature voltage 600 V DC,
  1 quadrant operation

3/14
- Rated supply voltage 3-ph. 500 V AC
  Rated armature voltage 520 V DC,
  4 quadrant operation

3/18
- Rated supply voltage 3-ph. 690 V AC
  Rated armature voltage 810 V DC,
  1 quadrant operation

3/22
- Rated supply voltage 3-ph. 690 V AC
  Rated armature voltage 720 V DC,
  4 quadrant operation

3/24 **Motor Options**

3/26 **Drive Converter Options and Accessories**

3/26 **Documentation**

3

Selection- and Ordering Data

Rated supply voltage 3-ph. 400 V AC
Rated armature voltage 470 V DC, 1 quadrant operation

Motor data
Rated armature voltage $V_{a\,N}$ = 470 V
Rated field voltage $V_{field\,N}$ = 310 V

Shaft height	Rated speed n_N RPM	Rated output P_N kW	Rated torque M_N Nm	Max. field-weakening speed $n_{Fmax.}$ RPM	Order No.	Approx. efficiency η %	Rated current I_N A	Field power P_{err} kW	Max. permissible operating speed n_{mech} RPM	Moment of inertia J kg/m²	Weight 1**GG** kg	1**GH**, kg	1**HS** kg	Terminal box
355	555	**242**	4160	1490	**1..5 352-5NA4.-1WV5**	90	565	3.2	2000	12	2370	2280	2630	1XB7 710
	790	**330**	3980	1760	**1..5 352-5ND4.-1WV5**	92	755	3.2	2000	12	2370	2280	2630	1XB7 710
	910	**365**	3840	1780	**1..5 352-5NE4.-1WV5**	93	825	3.2	2000	12	2370	2280	2630	1XB7 710
	1000	**404**	3860	1750	**1..5 352-5NF4.-1WV5**	93	910	3.2	2000	12	2370	2280	2630	1XB7 710
	1310	**470**	3420	1800	**1..5 352-5NH4.-1WV5**	94	1050	3.2	1800	12	2370	2280	2630	1XB7 710
	1530	**515**	3220	1800	**1..5 352-5NJ4.-1WV5**	94	1150	3.2	1800	12	2370	2280	2630	1XB7 710
400	432	**240**	5300	1290	**1..5 354-5NA4.-1WV5**	89	565	4.1	1800	14	2680	2590	2950	1XB7 710
	620	**324**	5000	1560	**1..5 354-5ND4.-1WV5**	91	745	4.1	1800	14	2680	2590	2950	1XB7 710
	715	**366**	4880	1550	**1..5 354-5NE4.-1WV5**	92	830	4.1	1800	14	2680	2590	2950	1XB7 710
	785	**396**	4820	1550	**1..5 354-5NF4.-1WV5**	93	895	4.1	1800	14	2680	2590	2950	1XB7 710
	1030	**472**	4380	1630	**1..5 354-5NH4.-1WV5**	94	1060	4.1	1800	14	2680	2590	2950	1XB7 710
	1200	**535**	4260	1800	**1..5 354-5NJ4.-1WV5**	94	1190	4.1	1800	14	2680	2590	2950	1XB7 710
	422	**264**	5950	1300	**1..5 402-5NA4.-1WV5**	88	625	3.9	1800	21	3060	2930	3310	1XB7 710
	555	**334**	5750	1420	**1..5 402-5NC4.-1WV5**	91	775	3.9	1800	21	3060	2930	3310	1XB7 710
	785	**465**	5650	1440	**1..5 402-5NF4.-1WV5**	93	1050	3.9	1800	21	3060	2930	3310	1XB7 710
	890	**515**	5550	1460	**1..5 402-5NG4.-1WV5**	93	1160	3.9	1700	21	3060	2930	3310	1XB7 710
	1000	**560**	5350	1410	**1..5 402-5NH4.-1WV5**	94	1260	3.9	1700	21	3060	2930	3310	1XB7 710
	1230	**640**	4960	1700	**1..5 402-5NJ4.-1WV5**	94	1420	3.9	1700	21	3060	2930	3310	1XB7 710
500	335	**264**	7550	1120	**1..5 404-5NA4.-1WV5**	87	635	4.4	1800	24	3460	3330	3710	1XB7 710
	478	**372**	7450	1260	**1..5 404-5ND4.-1WV5**	90	865	4.4	1800	24	3460	3330	3710	1XB7 710
	545	**418**	7300	1300	**1..5 404-5NE4.-1WV5**	91	960	4.4	1800	24	3460	3330	3710	1XB7 710
	625	**464**	7100	1260	**1..5 404-5NF4.-1WV5**	92	1060	4.4	1800	24	3460	3330	3710	1XB7 710
	710	**525**	7050	1260	**1..5 404-5NG4.-1WV5**	93	1190	4.4	1700	24	3460	3330	3710	1XB7 710
	800	**560**	6700	1240	**1..5 404-5NH4.-1WV5**	93	1260	4.4	1700	24	3460	3330	3710	1XB7 710
	985	**655**	6350	1500	**1..5 404-5NJ4.-1WV5**	94	1460	4.4	1700	24	3460	3330	3710	1XB7 710
	276	**262**	9050	990	**1..5 406-5NA4.-1WV5**	86	635	4.9	1600	27	3870	3740	4130	1XB7 710
	365	**334**	8750	1100	**1..5 406-5NC4.-1WV5**	89	785	4.9	1600	27	3870	3740	4130	1XB7 710
	452	**424**	8950	1140	**1..5 406-5NE4.-1WV5**	91	980	4.9	1600	27	3870	3740	4130	1XB7 710
	520	**454**	8350	1150	**1..5 406-5NF4.-1WV5**	91	1040	4.9	1600	27	3870	3740	4130	1XB7 710
	590	**535**	8650	1110	**1..5 406-5NG4.-1WV5**	92	1220	4.9	1600	27	3870	3740	4130	1XB7 710
	815	**650**	7600	1360	**1..5 406-5NJ4.-1WV5**	94	1460	4.9	1600	27	3870	3740	4130	1XB7 710
	392	**340**	8300	1170	**1..5 500-5EA4.-1WV5**	89	800	5	1800	55	4150	3950	4550	1XB7 710
	670	**570**	8100	1480	**1..5 500-5EL4.-1WV5**	93	1290	5	1800	55	4150	3950	4550	1XB7 942
	785	**630**	7650	1500	**1..5 500-5EN4.-1WV5**	93	1420	5	1800	55	4150	3950	4550	1XB7 942
	960	**745**	7400	1480	**1..5 500-5ES4.-1WV5**	94	1660	5	1800	55	4150	3950	4550	1XB7 942
	1120	**810**	6900	1520	**1..5 500-5EV4.-1WV5**	94	1800	5	1800	55	4150	3950	4550	1XB7 942
	290	**340**	11200	985	**1..5 501-5EA4.-1WV5**	88	810	5.5	1800	65	4650	4450	5050	1XB7 710
	505	**595**	11300	1250	**1..5 501-5EL4.-1WV5**	92	1360	5.5	1800	65	4650	4450	5050	1XB7 942
	590	**670**	10800	1240	**1..5 501-5EN4.-1WV5**	93	1510	5.5	1800	65	4650	4450	5050	1XB7 942
	715	**790**	10600	1230	**1..5 501-5ES4.-1WV5**	94	1780	5.5	1800	65	4650	4450	5050	1XB7 942
	835	**850**	9700	1280	**1..5 501-5EV4.-1WV5**	94	1900	5.5	1800	65	4650	4450	5050	1XB7 942

- **Separate ventilation using**

stand., radially-mounted, separately-driven fan	**G G**
separately-mounted, separately-driven fan*)	**G H**
mounted air-to-water heat exchanger	**H S**

- **Type of construction**

IM B 3	**0**
IM B 35 (up to frame size 400)	**6**

*) Not included in the scope of supply.

Drive converter data Rated supply voltage = 3-ph. 400 V AC		Components for the power section		Components for the field circuit	
		Commutating reactor	Phase fuses	Commutating reactor	Fuses
Rated drive converter DC current I_N A	Order No.	Order No.	Order No.	Order No.	Order No.
850	**6RA7087-6DS22-0**	**4EU3021-4BA10**	**3NE3 338-8**	**4EM4911-8CB**	**5SD480**
850	**6RA7087-6DS22-0**	**4EU3621-1CA10**	**3NE3 338-8**	**4EM4911-8CB**	**5SD480**
1200	**6RA7091-6DS22-0**	**4EU3621-2CA00**	1)	**4EM4911-8CB**	**5SD480**
1200	**6RA7091-6DS22-0**	**4EU3621-3CA10**	1)	**4EM4911-8CB**	**5SD480**
1200	**6RA7091-6DS22-0**	**4EU3921-2BA00**	1)	**4EM4911-8CB**	**5SD480**
1600	**6RA7093-4DS22-0**	**4EU3921-3BA00**	1)	**4EM4911-8CB**	**3NE1802-0**
850	**6RA7087-6DS22-0**	**4EU3021-4BA10**	**3NE3 338-8**	**4EM4912-1CB**	**5SD480**
850	**6RA7087-6DS22-0**	**4EU3621-1CA10**	**3NE3 338-8**	**4EM4912-1CB**	**5SD480**
1200	**6RA7091-6DS22-0**	**4EU3621-2CA00**	1)	**4EM4912-1CB**	**5SD480**
1200	**6RA7091-6DS22-0**	**4EU3621-3CA10**	1)	**4EM4912-1CB**	**5SD480**
1200	**6RA7091-6DS22-0**	**4EU3921-2BA00**	1)	**4EM4912-1CB**	**5SD480**
1600	**6RA7093-4DS22-0**	**4EU3921-3BA00**	1)	**4EM4912-1CB**	**3NE1802-0**
850	**6RA7087-6DS22-0**	**4EU3621-0CA10**	**3NE3 338-8**	**4EM4912-1CB**	**5SD480**
850	**6RA7087-6DS22-0**	**4EU3621-2CA00**	**3NE3 338-8**	**4EM4912-1CB**	**5SD480**
1200	**6RA7091-6DS22-0**	**4EU3921-2BA00**	1)	**4EM4912-1CB**	**5SD480**
1600	**6RA7093-4DS22-0**	**4EU3921-3BA00**	1)	**4EM4912-1CB**	**3NE1802-0**
1600	**6RA7093-4DS22-0**	**4EU3921-0AL00**	1)	**4EM4912-1CB**	**3NE1802-0**
1600	**6RA7093-4DS22-0**	**4EU4321-0AW00**	1)	**4EM4912-1CB**	**3NE1802-0**
850	**6RA7087-6DS22-0**	**4EU3621-0CA10**	**3NE3 338-8**	**4EM5000-2CB**	**5SD480**
1200	**6RA7091-6DS22-0**	**4EU3621-2CA00**	1)	**4EM5000-2CB**	**5SD480**
1200	**6RA7091-6DS22-0**	**4EU3621-3CA10**	1)	**4EM5000-2CB**	**5SD480**
1200	**6RA7091-6DS22-0**	**4EU3921-2BA00**	1)	**4EM5000-2CB**	**5SD480**
1600	**6RA7093-4DS22-0**	**4EU3921-3BA00**	1)	**4EM5000-2CB**	**3NE1802-0**
1600	**6RA7093-4DS22-0**	**4EU3921-0AL00**	1)	**4EM5000-2CB**	**3NE1802-0**
1600	**6RA7093-4DS22-0**	**4EU4321-0AW00**	1)	**4EM5000-2CB**	**3NE1802-0**
850	**6RA7087-6DS22-0**	**4EU3621-0CA10**	**3NE3 338-8**	**4EM5005-6CB**	**5SD480**
850	**6RA7087-6DS22-0**	**4EU3621-2CA00**	**3NE3 338-8**	**4EM5005-6CB**	**5SD480**
1200	**6RA7091-6DS22-0**	**4EU3621-3CA10**	1)	**4EM5005-6CB**	**5SD480**
1200	**6RA7091-6DS22-0**	**4EU3921-2BA00**	1)	**4EM5005-6CB**	**5SD480**
1600	**6RA7093-4DS22-0**	**4EU3921-3BA00**	1)	**4EM5005-6CB**	**3NE1802-0**
1600	**6RA7093-4DS22-0**	**4EU4321-0AW00**	1)	**4EM5005-6CB**	**3NE1802-0**
1200	**6RA7091-6DS22-0**	**4EU3621-2CA00**	1)	**4EM5005-6CB**	**5SD480**
1600	**6RA7093-4DS22-0**	**4EU4321-0AW00**	1)	**4EM5005-6CB**	**3NE1802-0**
1600	**6RA7093-4DS22-0**	**4EU4321-0AW00**	1)	**4EM5005-6CB**	**3NE1802-0**
2000	**6RA7095-4DS22-0**	**4EU4521-0AL00**	1)	**4EM5005-6CB**	**3NE1802-0**
2000	**6RA7095-4DS22-0**	**4EU4521-0AL00**	1)	**4EM5005-6CB**	**3NE1802-0**
1200	**6RA7091-6DS22-0**	**4EU3621-2CA00**	1)	**4EM5005-6CB**	**5SD480**
1600	**6RA7093-4DS22-0**	**4EU4321-0AW00**	1)	**4EM5005-6CB**	**3NE1802-0**
1600	**6RA7093-4DS22-0**	**4EU4321-0AW00**	1)	**4EM5005-6CB**	**3NE1802-0**
2000	**6RA7095-4DS22-0**	**4EU4521-0AL00**	1)	**4EM5005-6CB**	**3NE1802-0**
2000	**6RA7095-4DS22-0**	**4EU4521-0AL00**	1)	**4EM5005-6CB**	**3NE1802-0**

1) Fuses are included in the unit, no external semiconductor fuses are required.

Field weakening

The motor Order Nos. are valid for field-weakening speeds n_F up to $1.15 \cdot n_N$. For higher field-weakening speeds, additional codes are required, and more precisely "C05" for $n_F > 1.15 \cdot n_N$ up to $1.7 \cdot n_N$ and "C06" for $n_F > 1.7 \cdot n_N$.

The motors can be operated with rated output P_N up to the field-weakening speed $n_{Fmax.}$. The output must be reduced (de-rating) for higher speeds.

Motor-drive converter assignment

The overload capacity of the drives is calculated from the ratio between the rated drive converter current and the rated motor current.

For higher overload capacities, refer to Catalog DA 21.

For overload capacity of the motors, refer to the Engineering Information, Page 4/2.

3

Selection- and Ordering Data

Rated supply voltage 3-ph. 400 V AC
Rated armature voltage 470 V DC, 1 quadrant operation

Motor data
Rated armature voltage $V_{a\,N}$ = 470 V
Rated field voltage $V_{field\,N}$ = 310 V

Shaft height	Rated speed n_N RPM	Rated output P_N kW	Rated torque M_N Nm	Max. field-weakening speed $n_{Fmax.}$ RPM	Order No.	Approx. efficiency η %	Rated current I_N A	Field power P_{err} kW	Max. permissible operating speed n_{mech} RPM	Moment of inertia J kg/m²	Weight 1**GG**, kg	1**GH**, kg	1**HS** kg	Terminal box
500	226	**336**	14200	855	**1..5 502-5EA4.-1WV5**	86	810	6.8	1800	75	5100	4900	5500	1XB7710
	398	**595**	14300	1110	**1..5 502-5EL4.-1WV5**	91	1370	6.8	1800	75	5100	4900	5500	1XB7942
	460	**680**	14100	1080	**1..5 502-5EN4.-1WV5**	92	1550	6.8	1800	75	5100	4900	5500	1XB7942
	565	**795**	13400	1070	**1..5 502-5ES4.-1WV5**	93	1790	6.8	1800	75	5100	4900	5500	1XB7942
	660	**860**	12400	1120	**1..5 502-5EV4.-1WV5**	94	1920	6.8	1800	75	5100	4900	5500	1XB7942
	186	**332**	17000	745	**1..5 503-5EA4.-1WV5**	85	810	7.6	1700	85	5800	5600	6200	1XB7710
	328	**600**	17500	980	**1..5 503-5EL4.-1WV5**	90	1390	7.6	1700	85	5800	5600	6200	1XB7942
	380	**685**	17200	955	**1..5 503-5EN4.-1WV5**	91	1570	7.6	1700	85	5800	5600	6200	1XB7942
	468	**795**	16200	960	**1..5 503-5ES4.-1WV5**	93	1800	7.6	1700	85	5800	5600	6200	1XB7942
	545	**860**	15100	1010	**1..5 503-5EV4.-1WV5**	93	1930	7.6	1700	85	5800	5600	6200	1XB7942
	156	**328**	20000	625	**1..5 504-5EA4.-1WV5**	83	815	9.3	1700	94	6300	6100	6700	1XB7710
	276	**595**	20600	890	**1..5 504-5EL4.-1WV5**	89	1390	9.3	1700	94	6300	6100	6700	1XB7942
	322	**685**	20400	860	**1..5 504-5EN4.-1WV5**	91	1580	9.3	1700	94	6300	6100	6700	1XB7942
	395	**795**	19200	865	**1..5 504-5ES4.-1WV5**	92	1810	9.3	1700	94	6300	6100	6700	1XB7942
	462	**855**	17700	915	**1..5 504-5EV4.-1WV5**	93	1920	9.3	1700	94	6300	6100	6700	1XB7942
630	210	**405**	18400	840	**1..5 631-5EA4.-1WV5**	88	965	5.6	1500	174	7450	7200	7950	1XB7710
	346	**685**	18900	1010	**1..5 631-5EL4.-1WV5**	92	1570	5.6	1500	174	7450	7200	7950	1XB7942
	382	**760**	19000	980	**1..5 631-5EN4.-1WV5**	92	1730	5.6	1500	174	7450	7200	7950	1XB7942
	462	**900**	18600	985	**1..5 631-5ES4.-1WV5**	93	2040	5.6	1500	174	7450	7200	7950	1XB7942
	520	**995**	18300	1060	**1..5 631-5EV4.-1WV5**	94	2240	5.6	1500	174	7450	7200	7950	1XB7942
	166	**405**	23200	665	**1..5 632-5EA4.-1WV5**	87	970	6.8	1500	199	8250	8000	8750	1XB7710
	274	**685**	23800	900	**1..5 632-5EL4.-1WV5**	91	1580	6.8	1500	199	8250	8000	8750	1XB7942
	302	**770**	24400	865	**1..5 632-5EN4.-1WV5**	92	1760	6.8	1500	199	8250	8000	8750	1XB7942
	365	**920**	24000	860	**1..5 632-5ES4.-1WV5**	92	2100	6.8	1500	199	8250	8000	8750	1XB7942
	412	**1030**	23800	930	**1..5 632-5EV4.-1WV5**	93	2320	6.8	1500	199	8250	8000	8750	1XB7942
	137	**404**	28200	550	**1..5 633-5EA4.-1WV5**	85	985	7.1	1300	226	9350	9100	9850	1XB7710
	228	**680**	28500	815	**1..5 633-5EL4.-1WV5**	90	1580	7.1	1300	226	9350	9100	9850	1XB7942
	250	**775**	29600	770	**1..5 633-5EN4.-1WV5**	91	1790	7.1	1300	226	9350	9100	9850	1XB7942
	306	**920**	28800	780	**1..5 633-5ES4.-1WV5**	92	2100	7.1	1300	226	9350	9100	9850	1XB7942
	344	**1050**	29200	825	**1..5 633-5EV4.-1WV5**	93	2380	7.1	1300	226	9350	9100	9850	1XB7942
	117	**398**	32500	468	**1..5 634-5EA4.-1WV5**	84	980	7.4	1300	251	10150	9900	10650	1XB7710
	195	**675**	33000	745	**1..5 634-5EL4.-1WV5**	90	1570	7.4	1300	251	10150	9900	10650	1XB7942
	215	**765**	34000	710	**1..5 634-5EN4.-1WV5**	90	1770	7.4	1300	251	10150	9900	10650	1XB7942
	262	**915**	33400	710	**1..5 634-5ES4.-1WV5**	92	2100	7.4	1300	251	10150	9900	10650	1XB7942
	294	**1060**	34400	750	**1..5 634-5EV4.-1WV5**	92	2420	7.4	1300	251	10150	9900	10650	1XB7942
	93	**392**	40000	374	**1..5 635-5EA4.-1WV5**	82	980	9.2	1300	289	11500	11250	12000	1XB7710
	157	**670**	40800	630	**1..5 635-5EL4.-1WV5**	88	1580	9.2	1300	289	11500	11250	12000	1XB7942
	173	**765**	42200	620	**1..5 635-5EN4.-1WV5**	89	1790	9.2	1300	289	11500	11250	12000	1XB7942
	210	**910**	41400	625	**1..5 635-5ES4.-1WV5**	91	2120	9.2	1300	289	11500	11250	12000	1XB7942
	238	**1050**	42200	665	**1..5 635-5EV4.-1WV5**	91	2420	9.2	1300	289	11500	11250	12000	1XB7942

- **Separate ventilation using**
  - **stand., radially-mounted, separately-driven fan** **G G**
  - **separately-mounted, separately-driven fan*)** **G H**
  - **mounted air-to-water heat exchanger** **H S**
- **Type of construction**
  - **IM B 3** **0**
  - **IM B 35** (up to frame size 400) **6**

*) Not included in the scope of supply.

Drive converter data Rated supply voltage = 3-ph. 400 V AC		Components for the power section		Components for the field circuit	
		Commutating reactor	Phase fuses	Commutating reactor	Fuses
Rated drive converter DC current I_N A	Order No.	Order No.	Order No.	Order No.	Order No.
1200	**6RA7091-6DS22-0**	**4EU3621-2CA00**	1)	**4EM5005-8CB**	**5SD480**
1600	**6RA7093-4DS22-0**	**4EU4321-0AW00**	1)	**4EM5005-8CB**	**3NE1802-0**
2000	**6RA7095-4DS22-0**	**4EU4321-0AW00**	1)	**4EM5005-8CB**	**3NE1802-0**
2000	**6RA7095-4DS22-0**	**4EU4521-0AL00**	1)	**4EM5005-8CB**	**3NE1802-0**
2000	**6RA7095-4DS22-0**	**4EU4521-0AL00**	1)	**4EM5005-8CB**	**3NE1802-0**
1200	**6RA7091-6DS22-0**	**4EU3621-2CA00**	1)	**4EM6100-2CB**	**5SD480**
1600	**6RA7093-4DS22-0**	**4EU4321-0AW00**	1)	**4EM6100-2CB**	**3NE1802-0**
2000	**6RA7095-4DS22-0**	**4EU4321-0AW00**	1)	**4EM6100-2CB**	**3NE1802-0**
2000	**6RA7095-4DS22-0**	**4EU4521-0AL00**	1)	**4EM6100-2CB**	**3NE1802-0**
2000	**6RA7095-4DS22-0**	**4EU4521-0AL00**	1)	**4EM6100-2CB**	**3NE1802-0**
1200	**6RA7091-6DS22-0**	**4EU3621-2CA00**	1)	**4EM6100-3CB**	**5SD480**
1600	**6RA7093-4DS22-0**	**4EU4321-0AW00**	1)	**4EM6100-3CB**	**3NE1802-0**
2000	**6RA7095-4DS22-0**	**4EU4321-0AW00**	1)	**4EM6100-3CB**	**3NE1802-0**
2000	**6RA7095-4DS22-0**	**4EU4521-0AL00**	1)	**4EM6100-3CB**	**3NE1802-0**
2000	**6RA7095-4DS22-0**	**4EU4521-0AL00**	1)	**4EM6100-3CB**	**3NE1802-0**
1200	**6RA7091-6DS22-0**	**4EU3621-3CA10**	1)	**4EM5005-7CB**	**5SD480**
2000	**6RA7095-4DS22-0**	**4EU4321-0AW00**	1)	**4EM5005-7CB**	**3NE1802-0**
2000	**6RA7095-4DS22-0**	**4EU4521-0AL00**	1)	**4EM5005-7CB**	**3NE1802-0**
2400	**6RA7091-6DS22-0**2)	**4EU3921-2BA00**3)	1)	**4EM5005-7CB**	**5SD480**
3200	**6RA7093-4DS22-0**2)	**4EU3921-3BA00**3)	1)	**4EM5005-7CB**	**3NE1802-0**
1200	**6RA7091-6DS22-0**	**4EU3921-3CA10**	1)	**4EM5005-8CB**	**5SD480**
2000	**6RA7095-4DS22-0**	**4EU4321-0AW00**	1)	**4EM5005-8CB**	**3NE1802-0**
2000	**6RA7095-4DS22-0**	**4EU4521-0AL00**	1)	**4EM5005-8CB**	**3NE1802-0**
2400	**6RA7091-6DS22-0**2)	**4EU3921-2BA00**3)	1)	**4EM5005-8CB**	**5SD480**
3200	**6RA7093-4DS22-0**2)	**4EU3921-0AL00**3)	1)	**4EM5005-8CB**	**3NE1802-0**
1200	**6RA7091-6DS22-0**	**4EU3921-2BA00**	1)	**4EM5100-2CB**	**5SD480**
2000	**6RA7095-4DS22-0**	**4EU4321-0AW00**	1)	**4EM5100-2CB**	**5NE1802-0**
2000	**6RA7095-4DS22-0**	**4EU4521-0AL00**	1)	**4EM5100-2CB**	**5NE1802-0**
2400	**6RA7091-6DS22-0**2)	**4EU3921-2BA00**3)	1)	**4EM5100-2CB**	**5SD480**
3200	**6RA7093-4DS22-0**2)	**4EU3921-3BA00**3)	1)	**4EM5100-2CB**	**3NE1802-0**
1200	**6RA7091-6DS22-0**	**4EU3621-3CA10**	1)	**4EM5100-2CB**	**5SD480**
2000	**6RA7095-4DS22-0**	**4EU4321-0AW00**	1)	**4EM5100-2CB**	**3NE1802-0**
2000	**6RA7095-4DS22-0**	**4EU4521-0AL00**	1)	**4EM5100-2CB**	**3NE1802-0**
2400	**6RA7091-6DS22-0**2)	**4EU3921-2BA00**3)	1)	**4EM5100-2CB**	**5SD480**
3200	**6RA7093-4DS22-0**2)	**4EU3921-3BA00**3)	1)	**4EM5100-2CB**	**3NE1802-0**
1200	**6RA7091-6DS22-0**	**4EU3621-3CA10**	1)	**4EM6100-3CB**	**5SD480**
2000	**6RA7095-4DS22-0**	**4EU4321-0AW00**	1)	**4EM6100-3CB**	**3NE1802-0**
2000	**6RA7095-4DS22-0**	**4EU4521-0AL00**	1)	**4EM6100-3CB**	**3NE1802-0**
2400	**6RA7091-6DS22-0**2)	**4EU3921-2BA00**3)	1)	**4EM6100-3CB**	**5SD480**
3200	**6RA7093-4DS22-0**2)	**4EU3921-3BA00**3)	1)	**4EM6100-3CB**	**3NE1802-0**

1) Fuses are included in the unit, no external semiconductor fuses are required.

2) Two SIMOREG units are connected in parallel.

3) Two commutating reactors are required.

Field weakening

The motor Order Nos. are valid for field-weakening speeds n_F up to $1.15 \cdot n_N$. For higher field-weakening speeds, additional codes are required, and more precisely "C05" for $n_F > 1.15 \cdot n_N$ up to $1.7 \cdot n_N$ and "C06" for $n_F > 1.7 \cdot n_N$.

The motors can be operated with rated output P_N up to the field-weakening speed $n_{Fmax.}$. The output must be reduced (de-rating) for higher speeds.

Motor-drive converter assignment

The overload capacity of the drives is calculated from the ratio between the rated drive converter current and the rated motor current.

For higher overload capacities, refer to Catalog DA 21.

For overload capacity of the motors, refer to the Engineering Information, Page 4/2.

Selection- and Ordering Data

Rated supply voltage 3-ph. 400 V AC
Rated armature voltage 420 V DC, 4 quadrant operation

Motor data
Rated armature voltage $V_{a\,N}$ = 420 V
Rated field voltage $V_{field\,N}$ = 310 V

Shaft height	Rated speed n_N RPM	Rated output P_N kW	Rated torque M_N Nm	Max. field-weakening speed $n_{Fmax.}$ RPM	Order No.	Approx. efficiency η %	Rated current I_N A	Field power P_{err} kW	Max. permissible operating speed n_{mech} RPM	Moment of inertia J kg/m²	Weight 1**GG** kg	1**GH**, kg	1**HS** kg	Terminal box
355	488	**214**	4180	1490	**1..5 352-5NA4.-1VV5**	89	565	3.2	2000	12	2370	2280	2630	1XB7 710
	705	**294**	3980	1750	**1..5 352-5ND4.-1VV5**	91	755	3.2	2000	12	2370	2280	2630	1XB7 710
	805	**325**	3860	1780	**1..5 352-5NE4.-1VV5**	92	830	3.2	2000	12	2370	2280	2630	1XB7 710
	890	**358**	3840	1750	**1..5 352-5NF4.-1VV5**	93	910	3.2	2000	12	2370	2280	2630	1XB7 710
	1170	**418**	3420	1800	**1..5 352-5NH4.-1VV5**	94	1050	3.2	1800	12	2370	2280	2630	1XB7 710
	1360	**462**	3240	1800	**1..5 352-5NJ4.-1VV5**	94	1160	3.2	1800	12	2370	2280	2630	1XB7 710
	382	**212**	5300	1290	**1..5 354-5NA4.-1VV5**	87	565	4.1	1800	14	2680	2590	2950	1XB7 710
	550	**288**	5000	1560	**1..5 354-5ND4.-1VV5**	91	745	4.1	1800	14	2680	2590	2950	1XB7 710
	635	**326**	4900	1550	**1..5 354-5NE4.-1VV5**	91	835	4.1	1800	14	2680	2590	2950	1XB7 710
	700	**352**	4800	1550	**1..5 354-5NF4.-1VV5**	92	895	4.1	1800	14	2680	2590	2950	1XB7 710
	915	**420**	4380	1630	**1..5 354-5NH4.-1VV5**	93	1060	4.1	1800	14	2680	2590	2950	1XB7 710
	1070	**475**	4240	1800	**1..5 354-5NJ4.-1VV5**	93	1190	4.1	1800	14	2680	2590	2950	1XB7 710
	1280	**530**	3950	1800	**1..5 354-5NK4.-1VV5**	94	1310	4.1	1800	14	2680	2590	2950	1XB7 710
400	374	**234**	6000	1290	**1..5 402-5NA4.-1VV5**	87	625	3.9	1800	21	3060	2930	3310	1XB7 710
	492	**296**	5750	1420	**1..5 402-5NC4.-1VV5**	90	775	3.9	1800	21	3060	2930	3310	1XB7 710
	695	**412**	5650	1440	**1..5 402-5NF4.-1VV5**	92	1050	3.9	1800	21	3060	2930	3310	1XB7 710
	790	**460**	5550	1450	**1..5 402-5NG4.-1VV5**	93	1170	3.9	1700	21	3060	2930	3310	1XB7 710
	890	**500**	5350	1410	**1..5 402-5NH4.-1VV5**	93	1260	3.9	1700	21	3060	2930	3310	1XB7 710
	1090	**570**	5000	1700	**1..5 402-5NJ4.-1VV5**	94	1430	3.9	1700	21	3060	2930	3310	1XB7 710
	1280	**600**	4480	1700	**1..5 402-5NK4.-1VV5**	95	1490	3.9	1700	21	3060	2930	3310	1XB7 710
	295	**232**	7500	1120	**1..5 404-5NA4.-1VV5**	86	630	4.4	1800	24	3460	3330	3710	1XB7 710
	422	**330**	7450	1250	**1..5 404-5ND4.-1VV5**	89	870	4.4	1800	24	3460	3330	3710	1XB7 710
	484	**372**	7350	1300	**1..5 404-5NE4.-1VV5**	91	960	4.4	1800	24	3460	3330	3710	1XB7 710
	555	**412**	7100	1260	**1..5 404-5NF4.-1VV5**	91	1060	4.4	1800	24	3460	3330	3710	1XB7 710
	630	**468**	7100	1260	**1..5 404-5NG4.-1VV5**	92	1190	4.4	1700	24	3460	3330	3710	1XB7 710
	710	**500**	6750	1230	**1..5 404-5NH4.-1VV5**	93	1270	4.4	1700	24	3460	3330	3710	1XB7 710
	875	**580**	6350	1500	**1..5 404-5NJ4.-1VV5**	94	1450	4.4	1700	24	3460	3330	3710	1XB7 710
	242	**232**	9150	970	**1..5 406-5NA4.-1VV5**	84	645	4.9	1600	27	3870	3740	4130	1XB7 710
	322	**295**	8750	1100	**1..5 406-5NC4.-1VV5**	88	785	4.9	1600	27	3870	3740	4130	1XB7 710
	400	**375**	8950	1150	**1..5 406-5NE4.-1VV5**	90	980	4.9	1600	27	3870	3740	4130	1XB7 710
	460	**402**	8350	1150	**1..5 406-5NF4.-1VV5**	91	1040	4.9	1600	27	3870	3740	4130	1XB7 710
	525	**476**	8650	1100	**1..5 406-5NG4.-1VV5**	91	1220	4.9	1600	27	3870	3740	4130	1XB7 710
	725	**580**	7650	1360	**1..5 406-5NJ4.-1VV5**	93	1460	4.9	1600	27	3870	3740	4130	1XB7 710
500	345	**302**	8350	1170	**1..5 500-5EA4.-1VV5**	88	805	5	1800	55	4150	3950	4550	1XB7 710
	595	**510**	8200	1470	**1..5 500-5EL4.-1VV5**	92	1300	5	1800	55	4150	3950	4550	1XB7 942
	700	**565**	7700	1490	**1..5 500-5EN4.-1VV5**	93	1430	5	1800	55	4150	3950	4550	1XB7 942
	850	**670**	7550	1470	**1..5 500-5ES4.-1VV5**	93	1690	5	1800	55	4150	3950	4550	1XB7 942
	995	**735**	7050	1510	**1..5 500-5EV4.-1VV5**	94	1840	5	1800	55	4150	3950	4550	1XB7 942
	256	**300**	11200	985	**1..5 501-5EA4.-1VV5**	86	810	5.5	1800	65	4650	4450	5050	1XB7 710
	448	**525**	11200	1260	**1..5 501-5EL4.-1VV5**	91	1350	5.5	1800	65	4650	4450	5050	1XB7 942
	520	**600**	11000	1230	**1..5 501-5EN4.-1VV5**	92	1530	5.5	1800	65	4650	4450	5050	1XB7 942
	635	**705**	10600	1220	**1..5 501-5ES4.-1VV5**	93	1780	5.5	1800	65	4650	4450	5050	1XB7 942
	745	**755**	9700	1290	**1..5 501-5EV4.-1VV5**	94	1890	5.5	1800	65	4650	4450	5050	1XB7 942

- **Separate ventilation using**

stand., radially-mounted, separately-driven fan	G G
separately-mounted, separately-driven fan*)	G H
mounted air-to-water heat exchanger	H S

- **Type of construction**

IM B 3	0
IM B 35 (up to frame size 400)	6

*) Not included in the scope of supply.

Drive converter data Rated supply voltage = 3-ph. 400 V AC		Components for the power section			Components for the field circuit	
		Commutating reactor	Phase fuses	DC-Fuses	Commutating reactor	Fuses
Rated drive converter DC current I_N A	Order No.	Order No.	Order No.	Order No.	Order No.	Order No.
600	**6RA7085-6DV62-0**	**4EU3021-4BA10**	**3NE3 336**	**3NE3 336**	**4EM4911-8CB**	**5SD440**
850	**6RA7087-6DV62-0**	**4EU3621-1CA10**	**3NE3 338-8**	**3NE3 334-0B**[1])	**4EM4911-8CB**	**5SD480**
1200	**6RA7091-6DV62-0**	**4EU3621-2CA00**	[2])	[2])	**4EM4911-8CB**	**5SD480**
1200	**6RA7091-6DV62-0**	**4EU3621-3CA10**	[2])	[2])	**4EM4911-8CB**	**5SD480**
1200	**6RA7091-6DV62-0**	**4EU3921-2BA00**	[2])	[2])	**4EM4911-8CB**	**5SD480**
1600	**6RA7093-4DV62-0**	**4EU3921-3BA00**	[2])	[2])	**4EM4911-8CB**	**3NE1802-0**
600	**6RA7085-6DV62-0**	**4EU3021-4BA10**	**3NE3 336**	**3NE3 336**	**4EM4912-1CB**	**5SD440**
850	**6RA7087-6DV62-0**	**4EU3621-1CA10**	**3NE3 338-8**	**3NE3 334-0B**[1])	**4EM4912-1CB**	**5SD480**
1200	**6RA7091-6DV62-0**	**4EU3621-2CA00**	[2])	[2])	**4EM4912-1CB**	**5SD480**
1200	**6RA7091-6DV62-0**	**4EU3621-3CA10**	[2])	[2])	**4EM4912-1CB**	**5SD480**
1200	**6RA7091-6DV62-0**	**4EU3921-2BA00**	[2])	[2])	**4EM4912-1CB**	**5SD480**
1600	**6RA7093-4DV62-0**	**4EU3921-3BA00**	[2])	[2])	**4EM4912-1CB**	**3NE1802-0**
1600	**6RA7093-4DV62-0**	**4EU4321-0AW00**	[2])	[2])	**4EM4912-1CB**	**3NE1802-0**
850	**6RA7087-6DV62-0**	**4EU3621-0CA10**	**3NE3 338-8**	**3NE3 334-0B**[1])	**4EM4912-1CB**	**5SD480**
850	**6RA7087-6DV62-0**	**4EU3621-1CA10**	**3NE3 338-8**	**3NE3 334-0B**[1])	**4EM4912-1CB**	**5SD480**
1200	**6RA7091-6DV62-0**	**4EU3921-2BA00**	[2])	[2])	**4EM4912-1CB**	**5SD480**
1600	**6RA7093-4DV62-0**	**4EU3921-3BA00**	[2])	[2])	**4EM4912-1CB**	**3NE1802-0**
1600	**6RA7093-4DV62-0**	**4EU3921-0AL00**	[2])	[2])	**4EM4912-1CB**	**3NE1802-0**
1600	**6RA7093-4DV62-0**	**4EU4321-0AW00**	[2])	[2])	**4EM4912-1CB**	**3NE1802-0**
1600	**6RA7093-4DV62-0**	**4EU4321-0AW00**	[2])	[2])	**4EM4912-1CB**	**3NE1802-0**
850	**6RA7087-6DV62-0**	**4EU3621-0CA10**	**3NE3 338-8**	**3NE3 334-0B**[1])	**4EM5000-2CB**	**5SD480**
1200	**6RA7091-6DV62-0**	**4EU3621-2CA00**	[2])	[2])	**4EM5000-2CB**	**5SD480**
1200	**6RA7091-6DV62-0**	**4EU3621-3CA10**	[2])	[2])	**4EM5000-2CB**	**5SD480**
1200	**6RA7091-6DV62-0**	**4EU3921-2BA00**	[2])	[2])	**4EM5000-2CB**	**5SD480**
1600	**6RA7093-4DV62-0**	**4EU3921-3BA00**	[2])	[2])	**4EM5000-2CB**	**3NE1802-0**
1600	**6RA7093-4DV62-0**	**4EU3921-0AL00**	[2])	[2])	**4EM5000-2CB**	**3NE1802-0**
1600	**6RA7093-4DV62-0**	**4EU4321-0AW00**	[2])	[2])	**4EM5000-2CB**	**3NE1802-0**
850	**6RA7087-6DV62-0**	**4EU3621-0CA10**	**3NE3 338-8**	**3NE3 334-0B**[1])	**4EM5005-6CB**	**5SD480**
850	**6RA7087-6DV62-0**	**4EU3621-2CA00**	**3NE3 338-8**	**3NE3 334-0B**[1])	**4EM5005-6CB**	**5SD480**
1200	**6RA7091-6DV62-0**	**4EU3621-3CA10**	[2])	[2])	**4EM5005-6CB**	**5SD480**
1200	**6RA7091-6DV62-0**	**4EU3921-2BA00**	[2])	[2])	**4EM5005-6CB**	**5SD480**
1600	**6RA7093-4DV62-0**	**4EU3921-3BA00**	[2])	[2])	**4EM5005-6CB**	**3NE1802-0**
1600	**6RA7093-4DV62-0**	**4EU4321-0AW00**	[2])	[2])	**4EM5005-6CB**	**3NE1802-0**
1200	**6RA7091-6DV62-0**	**4EU3621-2CA00**	[2])	[2])	**4EM5005-6CB**	**5SD480**
1600	**6RA7093-4DV62-0**	**4EU4321-0AW00**	[2])	[2])	**4EM5005-6CB**	**3NE1802-0**
1600	**6RA7093-4DV62-0**	**4EU4321-0AW00**	[2])	[2])	**4EM5005-6CB**	**3NE1802-0**
2000	**6RA7095-4DV62-0**	**4EU4521-0AL00**	[2])	[2])	**4EM5005-6CB**	**3NE1802-0**
2000	**6RA7095-4DV62-0**	**4EU4521-0AL00**	[2])	[2])	**4EM5005-6CB**	**3NE1802-0**
1200	**6RA7091-6DV62-0**	**4EU3621-2CA00**	[2])	[2])	**4EM5005-6CB**	**5SD480**
1600	**6RA7093-4DV62-0**	**4EU4321-0AW00**	[2])	[2])	**4EM5005-6CB**	**3NE1802-0**
2000	**6RA7095-4DV62-0**	**4EU4321-0AW00**	[2])	[2])	**4EM5005-6CB**	**3NE1802-0**
2000	**6RA7095-4DV62-0**	**4EU4521-0AL00**	[2])	[2])	**4EM5005-6CB**	**3NE1802-0**
2000	**6RA7095-4DV62-0**	**4EU4521-0AL00**	[2])	[2])	**4EM5005-6CB**	**3NE1802-0**

1) Two fuses are connected in parallel.

2) Fuses are included in the unit, no external semiconductor fuses are required.

Field weakening

The motor Order Nos. are valid for field-weakening speeds n_F up to $1.15 \cdot n_N$. For higher field-weakening speeds, additional codes are required, and more precisely "C05" for $n_F > 1.15 \cdot n_N$ up to $1.7 \cdot n_N$ and "C06" for $n_F > 1.7 \cdot n_N$.

The motors can be operated with rated output P_N up to the field-weakening speed $n_{Fmax.}$. The output must be reduced (de-rating) for higher speeds.

Motor-drive converter assignment

The overload capacity of the drives is calculated from the ratio between the rated drive converter current and the rated motor current.

For higher overload capacities, refer to Catalog DA 21.

For overload capacity of the motors, refer to the Engineering Information, Page 4/2.

3

Selection- and Ordering Data

Rated supply voltage 3-ph. 400 V AC
Rated armature voltage 420 V DC, 4 quadrant operation

Motor data
Rated armature voltage $V_{a\,N}$ = 420 V
Rated field voltage $V_{field\,N}$ = 310 V

Shaft height	Rated speed n_N RPM	Rated output P_N kW	Rated torque M_N Nm	Max. field-weakening speed $n_{Fmax.}$ RPM	Order No.	Approx. efficiency η %	Rated current I_N A	Field power P_{err} kW	Max. permissible operating speed n_{mech} RPM	Moment of inertia J kg/m²	Weight 1**GG**, kg	1**GH**, kg	1**HS** kg	Terminal box
500	199	**296**	14200	795	**1..5 502-5EA4.-1VV5**	85	810	6.8	1800	75	5100	4900	5500	1XB7 710
	352	**530**	14400	1100	**1..5 502-5EL4.-1VV5**	90	1380	6.8	1800	75	5100	4900	5500	1XB7 942
	408	**605**	14200	1080	**1..5 502-5EN4.-1VV5**	91	1560	6.8	1800	75	5100	4900	5500	1XB7 942
	500	**705**	13500	1080	**1..5 502-5ES4.-1VV5**	93	1790	6.8	1800	75	5100	4900	5500	1XB7 942
	585	**765**	12500	1120	**1..5 502-5EV4.-1VV5**	93	1920	6.8	1800	75	5100	4900	5500	1XB7 942
	164	**292**	17000	655	**1..5 503-5EA4.-1VV5**	83	810	7.6	1700	85	5800	5600	6200	1XB7 710
	290	**530**	17500	985	**1..5 503-5EL4.-1VV5**	89	1390	7.6	1700	85	5800	5600	6200	1XB7 942
	338	**610**	17200	955	**1..5 503-5EN4.-1VV5**	91	1580	7.6	1700	85	5800	5600	6200	1XB7 942
	415	**710**	16300	955	**1..5 503-5ES4.-1VV5**	92	1810	7.6	1700	85	5800	5600	6200	1XB7 942
	485	**765**	15100	1010	**1..5 503-5EV4.-1VV5**	93	1930	7.6	1700	85	5800	5600	6200	1XB7 942
	137	**288**	20000	550	**1..5 504-5EA4.-1VV5**	82	815	9.3	1700	94	6300	6100	6700	1XB7 710
	244	**525**	20500	890	**1..5 504-5EL4.-1VV5**	88	1390	9.3	1700	94	6300	6100	6700	1XB7 942
	285	**610**	20400	855	**1..5 504-5EN4.-1VV5**	90	1590	9.3	1700	94	6300	6100	6700	1XB7 942
	350	**705**	19200	865	**1..5 504-5ES4.-1VV5**	91	1810	9.3	1700	94	6300	6100	6700	1XB7 942
	410	**760**	17700	915	**1..5 504-5EV4.-1VV5**	92	1930	9.3	1700	94	6300	6100	6700	1XB7 942
630	186	**358**	18400	745	**1..5 631-5EA4.-1VV5**	87	965	5.6	1500	174	7450	7200	7950	1XB7 710
	306	**605**	18900	1010	**1..5 631-5EL4.-1VV5**	91	1570	5.6	1500	174	7450	7200	7950	1XB7 942
	338	**675**	19100	980	**1..5 631-5EN4.-1VV5**	92	1730	5.6	1500	174	7450	7200	7950	1XB7 942
	410	**805**	18800	980	**1..5 631-5ES4.-1VV5**	92	2050	5.6	1500	174	7450	7200	7950	1XB7 942
	464	**890**	18300	1060	**1..5 631-5EV4.-1VV5**	93	2250	5.6	1500	174	7450	7200	7950	1XB7 942
	146	**356**	23200	585	**1..5 632-5EA4.-1VV5**	85	970	6.8	1500	199	8250	8000	8750	1XB7 710
	242	**605**	23800	900	**1..5 632-5EL4.-1VV5**	90	1570	6.8	1500	199	8250	8000	8750	1XB7 942
	266	**680**	24400	865	**1..5 632-5EN4.-1VV5**	91	1760	6.8	1500	199	8250	8000	8750	1XB7 942
	324	**815**	24000	865	**1..5 632-5ES4.-1VV5**	92	2080	6.8	1500	199	8250	8000	8750	1XB7 942
	365	**920**	24000	925	**1..5 632-5EV4.-1VV5**	93	2340	6.8	1500	199	8250	8000	8750	1XB7 942
	121	**356**	28000	484	**1..5 633-5EA4.-1VV5**	84	985	7.1	1300	226	9350	9100	9850	1XB7 710
	202	**600**	28400	810	**1..5 633-5EL4.-1VV5**	89	1570	7.1	1300	226	9350	9100	9850	1XB7 942
	222	**685**	29500	775	**1..5 633-5EN4.-1VV5**	90	1790	7.1	1300	226	9350	9100	9850	1XB7 942
	272	**815**	28600	780	**1..5 633-5ES4.-1VV5**	91	2100	7.1	1300	226	9350	9100	9850	1XB7 942
	304	**940**	29500	820	**1..5 633-5EV4.-1VV5**	92	2400	7.1	1300	226	9350	9100	9850	1XB7 942
	102	**350**	32800	408	**1..5 634-5EA4.-1VV5**	83	985	7.4	1300	251	10150	9900	10650	1XB7 710
	172	**600**	33400	690	**1..5 634-5EL4.-1VV5**	89	1590	7.4	1300	251	10150	9900	10650	1XB7 942
	190	**680**	34200	705	**1..5 634-5EN4.-1VV5**	89	1780	7.4	1300	251	10150	9900	10650	1XB7 942
	232	**810**	33400	710	**1..5 634-5ES4.-1VV5**	91	2100	7.4	1300	251	10150	9900	10650	1XB7 942
	260	**935**	34400	750	**1..5 634-5EV4.-1VV5**	91	2400	7.4	1300	251	10150	9900	10650	1XB7 942
	81	**344**	40400	326	**1..5 635-5EA4.-1VV5**	80	985	9.2	1300	289	11500	11250	12000	1XB7 710
	139	**595**	40800	555	**1..5 635-5EL4.-1VV5**	87	1590	9.2	1300	289	11500	11250	12000	1XB7 942
	153	**675**	42200	610	**1..5 635-5EN4.-1VV5**	88	1790	9.2	1300	289	11500	11250	12000	1XB7 942
	187	**805**	41200	625	**1..5 635-5ES4.-1VV5**	90	2100	9.2	1300	289	11500	11250	12000	1XB7 942
	210	**930**	42200	665	**1..5 635-5EV4.-1VV5**	91	2420	9.2	1300	289	11500	11250	12000	1XB7 942

- **Separate ventilation using**

stand., radially-mounted, separately-driven fan	**G G**
separately-mounted, separately-driven fan*)	**G H**
mounted air-to-water heat exchanger	**H S**

- **Type of construction**

IM B 3	**0**
IM B 35 (up to frame size 400)	**6**

*) Not included in the scope of supply.

Drive converter data Rated supply voltage = 3-ph. 400 V AC		Components for the power section			Components for the field circuit	
		Commutating reactor	Phase fuses	DC-Fuses	Commutating reactor	Fuses
Rated drive converter DC current I_N A	Order No.	Order No.	Order No.	Order No.	Order No.	Order No.
1200	**6RA7091-6DV62-0**	**4EU3621-2CA00**	1)	1)	**4EM5005-8CB**	**5SD480**
1600	**6RA7093-4DV62-0**	**4EU4321-0AW00**	1)	1)	**4EM5005-8CB**	**3NE1802-0**
2000	**6RA7095-4DV62-0**	**4EU4321-0AW00**	1)	1)	**4EM5005-8CB**	**3NE1802-0**
2000	**6RA7095-4DV62-0**	**4EU4521-0AL00**	1)	1)	**4EM5005-8CB**	**3NE1802-0**
2000	**6RA7095-4DV62-0**	**4EU4521-0AL00**	1)	1)	**4EM5005-8CB**	**3NE1802-0**
1200	**6RA7091-6DV62-0**	**4EU3621-2CA00**	1)	1)	**4EM6100-2CB**	**5SD480**
1600	**6RA7093-4DV62-0**	**4EU4321-0AW00**	1)	1)	**4EM6100-2CB**	**3NE1802-0**
2000	**6RA7095-4DV62-0**	**4EU4321-0AW00**	1)	1)	**4EM6100-2CB**	**3NE1802-0**
2000	**6RA7095-4DV62-0**	**4EU4521-0AL00**	1)	1)	**4EM6100-2CB**	**3NE1802-0**
2000	**6RA7095-4DV62-0**	**4EU4521-0AL00**	1)	1)	**4EM6100-2CB**	**3NE1802-0**
1200	**6RA7091-6DV62-0**	**4EU3621-2CA00**	1)	1)	**4EM6100-3CB**	**5SD480**
1600	**6RA7093-4DV62-0**	**4EU4321-0AW00**	1)	1)	**4EM6100-3CB**	**3NE1802-0**
2000	**6RA7095-4DV62-0**	**4EU4321-0AW00**	1)	1)	**4EM6100-3CB**	**3NE1802-0**
2000	**6RA7095-4DV62-0**	**4EU4521-0AL00**	1)	1)	**4EM6100-3CB**	**3NE1802-0**
2000	**6RA7095-4DV62-0**	**4EU4521-0AL00**	1)	1)	**4EM6100-3CB**	**3NE1802-0**
1200	**6RA7091-6DV62-0**	**4EU3621-3CA10**	1)	1)	**4EM5005-7CB**	**5SD480**
2000	**6RA7095-4DV62-0**	**4EU4321-0AW00**	1)	1)	**4EM5005-7CB**	**3NE1802-0**
2000	**6RA7095-4DV62-0**	**4EU4521-0AL00**	1)	1)	**4EM5005-7CB**	**3NE1802-0**
2400	**6RA7091-6DV62-0**[2]	**4EU3921-2BA00**[3]	1)	1)	**4EM5005-7CB**	**5SD480**
3200	**6RA7093-4DV62-0**[2]	**4EU3921-3BA00**[3]	1)	1)	**4EM5005-7CB**	**3NE1802-0**
1200	**6RA7091-6DV62-0**	**4EU3621-3CA10**	1)	1)	**4EM5005-8CB**	**5SD480**
2000	**6RA7095-4DV62-0**	**4EU4321-0AW00**	1)	1)	**4EM5005-8CB**	**3NE1802-0**
2000	**6RA7095-4DV62-0**	**4EU4521-0AL00**	1)	1)	**4EM5005-8CB**	**3NE1802-0**
2400	**6RA7091-6DV62-0**[2]	**4EU3921-2BA00**[3]	1)	1)	**4EM5005-8CB**	**5SD480**
3200	**6RA7093-4DV62-0**[2]	**4EU3921-3BA00**[3]	1)	1)	**4EM5005-8CB**	**3NE1802-0**
1200	**6RA7091-6DV62-0**	**4EU3921-2BA00**	1)	1)	**4EM5100-2CB**	**5SD480**
2000	**6RA7095-4DV62-0**	**4EU4321-0AW00**	1)	1)	**4EM5100-2CB**	**3NE1802-0**
2000	**6RA7095-4DV62-0**	**4EU4521-0AL00**	1)	1)	**4EM5100-2CB**	**3NE1802-0**
2400	**6RA7091-6DV62-0**[2]	**4EU3921-2BA00**[3]	1)	1)	**4EM5100-2CB**	**5SD480**
3200	**6RA7093-4DV62-0**[2]	**4EU3921-3BA00**[3]	1)	1)	**4EM5100-2CB**	**3NE1802-0**
1200	**6RA7091-6DV62-0**	**4EU3921-2BA00**	1)	1)	**4EM5100-2CB**	**5SD480**
2000	**6RA7095-4DV62-0**	**4EU4321-0AW00**	1)	1)	**4EM5100-2CB**	**3NE1802-0**
2000	**6RA7095-4DV62-0**	**4EU4521-0AL00**	1)	1)	**4EM5100-2CB**	**3NE1802-0**
2400	**6RA7091-6DV62-0**[2]	**4EU3921-2BA00**[3]	1)	1)	**4EM5100-2CB**	**5SD480**
3200	**6RA7093-4DV62-0**[2]	**4EU3921-3BA00**[3]	1)	1)	**4EM5100-2CB**	**3NE1802-0**
1200	**6RA7091-6DV62-0**	**4EU3921-2BA00**	1)	1)	**4EM6100-3CB**	**5SD480**
2000	**6RA7095-4DV62-0**	**4EU4321-0AW00**	1)	1)	**4EM6100-3CB**	**3NE1802-0**
2000	**6RA7095-4DV62-0**	**4EU4521-0AL00**	1)	1)	**4EM6100-3CB**	**3NE1802-0**
2400	**6RA7091-6DV62-0**[2]	**4EU3921-2BA00**[3]	1)	1)	**4EM6100-3CB**	**5SD480**
3200	**6RA7093-4DV62-0**[2]	**4EU3921-3BA00**[3]	1)	1)	**4EM6100-3CB**	**3NE1802-0**

1) Fuses are included in the unit, no external semiconductor fuses are required.

2) Two SIMOREG units are connected in parallel.

3) Two commutating reactors are required.

Field weakening

The motor Order Nos. are valid for field-weakening speeds n_F up to $1.15 \cdot n_N$. For higher field-weakening speeds, additional codes are required, and more precisely "C05" for $n_F > 1.15 \cdot n_N$ up to $1.7 \cdot n_N$ and "C06" for $n_F > 1.7 \cdot n_N$.

The motors can be operated with rated output P_N up to the field-weakening speed $n_{Fmax.}$. The output must be reduced (de-rating) for higher speeds.

Motor-drive converter assignment

The overload capacity of the drives is calculated from the ratio between the rated drive converter current and the rated motor current.

For higher overload capacities, refer to Catalog DA 21.

For overload capacity of the motors, refer to the Engineering Information, Page 4/2.

3

Selection- and Ordering Data

Rated supply voltage 3-ph. 500 V AC
Rated armature voltage 600 V DC, 1 quadrant operation

Motor data
Rated armature voltage $V_{a\,N}$ = 600 V
Rated field voltage $V_{field\,N}$ = 310 V

Shaft height	Rated speed n_N RPM	Rated output P_N kW	Rated torque M_N Nm	Max. field-weakening speed $n_{Fmax.}$ RPM	Order No.	Approx. efficiency η %	Rated current I_N A	Field power P_{err} kW	Max. permissible operating speed n_{mech} RPM	Moment of inertia J kg/m²	Weight 1**GG** kg	1**GH**, kg	1**HS** kg	Terminal box
355	720	**308**	4080	1510	**1..5 352-5NA4.-7NV5**	92	550	3.2	2000	12	2370	2280	2630	1XB7 710
	1030	**412**	3820	1800	**1..5 352-5ND4.-7NV5**	93	725	3.2	2000	12	2370	2280	2630	1XB7 710
	1180	**436**	3520	1890	**1..5 352-5NE4.-7NV5**	94	760	3.2	2000	12	2370	2280	2630	1XB7 710
	1290	**482**	3560	1850	**1..5 352-5NF4.-7NV5**	94	845	3.2	2000	12	2370	2280	2630	1XB7 710
	565	**310**	5250	1300	**1..5 354-5NA4.-7NV5**	91	560	4.1	1800	14	2680	2590	2950	1XB7 710
	805	**412**	4880	1580	**1..5 354-5ND4.-7NV5**	93	730	4.1	1800	14	2680	2590	2950	1XB7 710
	925	**464**	4800	1580	**1..5 354-5NE4.-7NV5**	93	815	4.1	1800	14	2680	2590	2950	1XB7 710
	1020	**500**	4680	1580	**1..5 354-5NF4.-7NV5**	94	875	4.1	1800	14	2680	2590	2950	1XB7 710
400	555	**340**	5850	1310	**1..5 402-5NA4.-7NV5**	91	615	3.9	1800	21	3060	2930	3310	1XB7 710
	725	**424**	5600	1450	**1..5 402-5NC4.-7NV5**	92	755	3.9	1800	21	3060	2930	3310	1XB7 710
	1010	**575**	5450	1490	**1..5 402-5NF4.-7NV5**	94	1010	3.9	1800	21	3060	2930	3310	1XB7 710
	1150	**635**	5250	1510	**1..5 402-5NG4.-7NV5**	94	1110	3.9	1700	21	3060	2930	3310	1XB7 710
	1290	**665**	4920	1500	**1..5 402-5NH4.-7NV5**	95	1160	3.9	1700	21	3060	2930	3310	1XB7 710
	440	**342**	7400	1130	**1..5 404-5NA4.-7NV5**	90	625	4.4	1800	24	3460	3330	3710	1XB7 710
	620	**476**	7350	1270	**1..5 404-5ND4.-7NV5**	92	850	4.4	1800	24	3460	3330	3710	1XB7 710
	705	**530**	7200	1320	**1..5 404-5NE4.-7NV5**	93	940	4.4	1800	24	3460	3330	3710	1XB7 710
	810	**590**	6950	1280	**1..5 404-5NF4.-7NV5**	93	1040	4.4	1800	24	3460	3330	3710	1XB7 710
	920	**650**	6750	1310	**1..5 404-5NG4.-7NV5**	94	1140	4.4	1700	24	3460	3330	3710	1XB7 710
	1030	**695**	6450	1270	**1..5 404-5NH4.-7NV5**	94	1220	4.4	1700	24	3460	3330	3710	1XB7 710
	362	**342**	9000	995	**1..5 406-5NA4.-7NV5**	89	635	4.9	1600	27	3870	3740	4130	1XB7 710
	476	**432**	8650	1110	**1..5 406-5NC4.-7NV5**	91	780	4.9	1600	27	3870	3740	4130	1XB7 710
	585	**540**	8800	1160	**1..5 406-5NE4.-7NV5**	92	960	4.9	1600	27	3870	3740	4130	1XB7 710
	675	**580**	8200	1160	**1..5 406-5NF4.-7NV5**	93	1020	4.9	1600	27	3870	3740	4130	1XB7 710
	765	**670**	8350	1140	**1..5 406-5NG4.-7NV5**	94	1180	4.9	1600	27	3870	3740	4130	1XB7 710
500	510	**435**	8150	1190	**1..5 500-5EA4.-7NV5**	91	785	5	1800	55	4150	3950	4550	1XB7 710
	865	**695**	7650	1540	**1..5 500-5EL4.-7NV5**	94	1220	5	1800	55	4150	3950	4550	1XB7 942
	1020	**760**	7100	1560	**1..5 500-5EN4.-7NV5**	94	1320	5	1800	55	4150	3950	4550	1XB7 942
	1240	**865**	6650	1580	**1..5 500-5ES4.-7NV5**	94	1500	5	1800	55	4150	3950	4550	1XB7 942
	1440	**925**	6150	1640	**1..5 500-5EV4.-7NV5**	94	1620	5	1800	55	4150	3950	4550	1XB7 942
	380	**444**	11200	985	**1..5 501-5EA4.-7NV5**	90	810	5.5	1800	65	4650	4450	5050	1XB7 710
	655	**740**	10800	1290	**1..5 501-5EL4.-7NV5**	93	1300	5.5	1800	65	4650	4450	5050	1XB7 942
	760	**825**	10400	1290	**1..5 501-5EN4.-7NV5**	94	1450	5.5	1800	65	4650	4450	5050	1XB7 942
	925	**970**	10000	1270	**1..5 501-5ES4.-7NV5**	95	1690	5.5	1800	65	4650	4450	5050	1XB7 942
	1080	**1060**	9350	1310	**1..5 501-5EV4.-7NV5**	95	1840	5.5	1800	65	4650	4450	5050	1XB7 942
	298	**440**	14100	855	**1..5 502-5EA4.-7NV5**	89	810	6.8	1800	75	5100	4900	5500	1XB7 710
	515	**755**	14000	1130	**1..5 502-5EL4.-7NV5**	93	1340	6.8	1800	75	5100	4900	5500	1XB7 942
	595	**845**	13600	1110	**1..5 502-5EN4.-7NV5**	93	1490	6.8	1800	75	5100	4900	5500	1XB7 942
	725	**1010**	13300	1090	**1..5 502-5ES4.-7NV5**	94	1770	6.8	1800	75	5100	4900	5500	1XB7 942
	845	**1100**	12400	1130	**1..5 502-5EV4.-7NV5**	95	1920	6.8	1800	75	5100	4900	5500	1XB7 942

- **Separate ventilation using**

stand., radially-mounted, separately-driven fan	**G G**
separately-mounted, separately-driven fan*)	**G H**
mounted air-to-water heat exchanger	**H S**

- **Type of construction**

IM B 3	**0**
IM B 35 (up to frame size 400)	**6**

*) Not included in the scope of supply.

Drive converter data Rated supply voltage = 3-ph. 500 V AC		Components for the power section		Components for the field circuit	
		Commutating reactor	Phase fuses	Commutating reactor	Fuses
Rated drive converter DC current I_N A	Order No.	Order No.	Order No.	Order No.	Order No.
600	**6RA7085-6GS22-0**	**4EU3621-5CA00**	**3NE3336**	**4EM4911-8CB**	**5SD440**
800	**6RA7087-6GS22-0**	**4EU3621-8CA00**	**3NE3338-8**	**4EM4911-8CB**	**5SD480**
1000	**6RA7090-6GS22-0**	**4EU3621-8CA00**	1)	**4EM4911-8CB**	**5SD480**
1000	**6RA7090-6GS22-0**	**4EU3921-6BA00**	1)	**4EM4911-8CB**	**5SD480**
800	**6RA7087-6GS22-0**	**4EU3621-6CA10**	**3NE3338-8**	**4EM4912-1CB**	**5SD480**
800	**6RA7087-6GS22-0**	**4EU3621-8CA00**	**3NE3338-8**	**4EM4912-1CB**	**5SD480**
1000	**6RA7090-6GS22-0**	**4EU3921-6BA00**	1)	**4EM4912-1CB**	**5SD480**
1000	**6RA7090-6GS22-0**	**4EU3921-7BA00**	1)	**4EM4912-1CB**	**5SD480**
800	**6RA7087-6GS22-0**	**4EU3621-7CA00**	**3NE3338-8**	**4EM4912-1CB**	**5SD480**
800	**6RA7087-6GS22-0**	**4EU3621-8CA00**	**3NE3338-8**	**4EM4912-1CB**	**5SD480**
1600	**6RA7093-4GS22-0**	**4EU4321-4CA00**	1)	**4EM4912-1CB**	**3NE1802-0**
1600	**6RA7093-4GS22-0**	**4EU4321-4CA00**	1)	**4EM4912-1CB**	**3NE1802-0**
1600	**6RA7093-4GS22-0**	**4EU4321-5CA00**	1)	**4EM4912-1CB**	**3NE1802-0**
800	**6RA7087-6GS22-0**	**4EU3621-7CA00**	**3NE3338-8**	**4EM5000-2CB**	**5SD480**
1000	**6RA7090-6GS22-0**	**4EU3921-6BA00**	1)	**4EM5000-2CB**	**5SD480**
1000	**6RA7090-6GS22-0**	**4EU3921-7BA00**	1)	**4EM5000-2CB**	**5SD480**
1600	**6RA7093-4GS22-0**	**4EU4321-4CA00**	1)	**4EM5000-2CB**	**3NE1802-0**
1600	**6RA7093-4GS22-0**	**4EU4321-5CA00**	1)	**4EM5000-2CB**	**3NE1802-0**
1600	**6RA7093-4GS22-0**	**4EU4321-5CA00**	1)	**4EM5000-2CB**	**3NE1802-0**
800	**6RA7087-6GS22-0**	**4EU3621-7CA00**	**3NE3338-8**	**4EM5005-6CB**	**5SD480**
1000	**6RA7090-6GS22-0**	**4EU3921-6BA00**	1)	**4EM5005-6CB**	**5SD480**
1600	**6RA7093-4GS22-0**	**4EU3921-7BA00**	1)	**4EM5005-6CB**	**3NE1802-0**
1600	**6RA7093-4GS22-0**	**4EU4321-4CA00**	1)	**4EM5005-6CB**	**3NE1802-0**
1600	**6RA7093-4GS22-0**	**4EU4321-5CA00**	1)	**4EM5005-6CB**	**3NE1802-0**
1000	**6RA7090-6GS22-0**	**4EU3921-6BA00**	1)	**4EM5005-6CB**	**5SD480**
1600	**6RA7093-4GS22-0**	**4EU4321-5CA00**	1)	**4EM5005-6CB**	**3NE1802-0**
1600	**6RA7093-4GS22-0**	**4EU4521-0AK00**	1)	**4EM5005-6CB**	**3NE1802-0**
1600	**6RA7093-4GS22-0**	**4EU4521-0AK00**	1)	**4EM5005-6CB**	**3NE1802-0**
2000	**6RA7095-4GS22-0**	**4EU5021-0AA00**	1)	**4EM5005-6CB**	**3NE1802-0**
1000	**6RA7090-6GS22-0**	**4EU3921-6BA00**	1)	**4EM5005-6CB**	**5SD480**
1600	**6RA7093-4GS22-0**	**4EU4521-0AK00**	1)	**4EM5005-6CB**	**3NE1802-0**
1600	**6RA7093-4GS22-0**	**4EU4521-0AK00**	1)	**4EM5005-6CB**	**3NE1802-0**
2000	**6RA7095-4GS22-0**	**4EU5021-0AA00**	1)	**4EM5005-6CB**	**3NE1802-0**
2000	**6RA7095-4GS22-0**	**4EU5021-0AA00**	1)	**4EM5005-6CB**	**3NE1802-0**
1000	**6RA7090-6GS22-0**	**4EU3921-6BA00**	1)	**4EM5005-8CB**	**5SD480**
1600	**6RA7093-4GS22-0**	**4EU4521-0AK00**	1)	**4EM5005-8CB**	**3NE1802-0**
1600	**6RA7093-4GS22-0**	**4EU4521-0AK00**	1)	**4EM5005-8CB**	**3NE1802-0**
2000	**6RA7095-4GS22-0**	**4EU5021-0AA00**	1)	**4EM5005-8CB**	**3NE1802-0**
2000	**6RA7095-4GS22-0**	**4EU5021-0AA00**	1)	**4EM5005-8CB**	**3NE1802-0**

1) Fuses are included in the unit, no external semiconductor fuses are required.

Field weakening

The motor Order Nos. are valid for field-weakening speeds n_F up to $1.15 \cdot n_N$. For higher field-weakening speeds, additional codes are required, and more precisely "C05" for $n_F > 1.15 \cdot n_N$ up to $1.7 \cdot n_N$ and "C06" for $n_F > 1.7 \cdot n_N$.

The motors can be operated with rated output P_N up to the field-weakening speed $n_{Fmax.}$. The output must be reduced (de-rating) for higher speeds.

Motor-drive converter assignment

The overload capacity of the drives is calculated from the ratio between the rated drive converter current and the rated motor current.

For higher overload capacities, refer to Catalog DA 21.

For overload capacity of the motors, refer to the Engineering Information, Page 4/2.

3

Selection- and Ordering Data

Rated supply voltage 3-ph. 500 V AC
Rated armature voltage 600 V DC, 1 quadrant operation

Motor data
Rated armature voltage $V_{a\,N}$ = 600 V
Rated field voltage $V_{field\,N}$ = 310 V

Shaft height	Rated speed n_N RPM	Rated output P_N kW	Rated torque M_N Nm	Max. field-weakening speed $n_{Fmax.}$ RPM	Order No.	Approx. efficiency η %	Rated current I_N A	Field power P_{err} kW	Max. permissible operating speed n_{mech} RPM	Moment of inertia J kg/m²	Weight 1**GG**, kg	1**GH**, kg	1**HS** kg	Terminal box
500	245	**436**	17000	755	**1..5 503-5EA4.-7NV5**	88	810	7.6	1700	85	5800	5600	6200	1XB7 710
	426	**765**	17100	995	**1..5 503-5EL4.-7NV5**	92	1370	7.6	1700	85	5800	5600	6200	1XB7 942
	495	**860**	16600	980	**1..5 503-5EN4.-7NV5**	93	1520	7.6	1700	85	5800	5600	6200	1XB7 942
	605	**1020**	16100	960	**1..5 503-5ES4.-7NV5**	94	1790	7.6	1700	85	5800	5600	6200	1XB7 942
	705	**1110**	15000	1000	**1..5 503-5EV4.-7NV5**	94	1930	7.6	1700	65	5800	5600	6200	1XB7 942
	206	**432**	20000	675	**1..5 504-5EA4.-7NV5**	87	810	9.3	1700	94	6300	6100	6700	1XB7 710
	360	**765**	20200	900	**1..5 504-5EL4.-7NV5**	91	1370	9.3	1700	94	6300	6100	6700	1XB7 942
	418	**865**	19800	880	**1..5 504-5EN4.-7NV5**	92	1540	9.3	1700	94	6300	6100	6700	1XB7 942
	510	**1020**	19100	870	**1..5 504-5ES4.-7NV5**	93	1800	9.3	1700	94	6300	6100	6700	1XB7 942
	595	**1100**	17700	915	**1..5 504-5EV4.-7NV5**	94	1920	9.3	1700	94	6300	6100	6700	1XB7 942
630	276	**530**	18300	920	**1..5 631-5EA4.-7NV5**	90	965	5.6	1500	174	7450	7200	7950	1XB7 710
	448	**870**	18500	1020	**1..5 631-5EL4.-7NV5**	93	1540	5.6	1500	174	7450	7200	7950	1XB7 942
	494	**955**	18500	1000	**1..5 631-5EN4.-7NV5**	94	1680	5.6	1500	174	7450	7200	7950	1XB7 942
	600	**1110**	17700	1020	**1..5 631-5ES4.-7NV5**	94	1940	5.6	1500	174	7450	7200	7950	1XB7 942
	675	**1220**	17300	1100	**1..5 631-5EV4.-7NV5**	95	2120	5.6	1500	174	7450	7200	7950	1XB7 942
	216	**530**	23400	810	**1..5 632-5EA4.-7NV5**	89	975	6.8	1500	199	8250	8000	8750	1XB7 710
	354	**880**	23800	905	**1..5 632-5EL4.-7NV5**	93	1570	6.8	1500	199	8250	8000	8750	1XB7 942
	390	**985**	24200	870	**1..5 632-5EN4.-7NV5**	93	1740	6.8	1500	199	8250	8000	8750	1XB7 942
	472	**1160**	23500	880	**1..5 632-5ES4.-7NV5**	94	2040	6.8	1500	199	8250	8000	8750	1XB7 942
	530	**1280**	23000	955	**1..5 632-5EV4.-7NV5**	94	2240	6.8	1500	199	8250	8000	8750	1XB7 942
	180	**530**	28200	720	**1..5 633-5EA4.-7NV5**	88	985	7.1	1300	226	9350	9100	9850	1XB7 710
	296	**880**	28400	815	**1..5 633-5EL4.-7NV5**	92	1570	7.1	1300	226	9350	9100	9850	1XB7 942
	325	**1000**	29400	775	**1..5 633-5EN4.-7NV5**	93	1780	7.1	1300	226	9350	9100	9850	1XB7 942
	395	**1180**	28500	785	**1..5 633-5ES4.-7NV5**	94	2080	7.1	1300	226	9350	9100	9850	1XB7 942
	445	**1320**	28400	845	**1..5 633-5EV4.-7NV5**	94	2320	7.1	1300	226	9350	9100	9850	1XB7 942
	154	**525**	32600	615	**1..5 634-5EA4.-7NV5**	87	980	7.4	1300	251	10150	9900	10650	1XB7 710
	254	**880**	33000	745	**1..5 634-5EL4.-7NV5**	92	1580	7.4	1300	251	10150	9900	10650	1XB7 942
	278	**995**	34200	705	**1..5 634-5EN4.-7NV5**	92	1780	7.4	1300	251	10150	9900	10650	1XB7 942
	340	**1180**	33200	715	**1..5 634-5ES4.-7NV5**	93	2080	7.4	1300	251	10150	9900	10650	1XB7 942
	380	**1360**	34200	755	**1..5 634-5EV4.-7NV5**	94	2400	7.4	1300	251	10150	9900	10650	1XB7 942
	124	**520**	40000	496	**1..5 635-5EA4.-7NV5**	86	985	9.2	1300	289	11500	11250	12000	1XB7 710
	205	**875**	40800	660	**1..5 635-5EL4.-7NV5**	91	1580	9.2	1300	289	11500	11250	12000	1XB7 942
	226	**990**	41800	625	**1..5 635-5EN4.-7NV5**	91	1780	9.2	1300	289	11500	11250	12000	1XB7 942
	274	**1180**	41200	625	**1..5 635-5ES4.-7NV5**	92	2100	9.2	1300	289	11500	11250	12000	1XB7 942
	308	**1360**	42200	665	**1..5 635-5EV4.-7NV5**	93	2420	9.2	1300	289	11500	11250	12000	1XB7 942

- **Separate ventilation using**

stand., radially-mounted, separately-driven fan	**G G**
separately-mounted, separately-driven fan*)	**G H**
mounted air-to-water heat exchanger	**H S**

- **Type of construction**

IM B 3	**0**
IM B 35 (up to frame size 400)	**6**

*) Not included in the scope of supply.

Drive converter data Rated supply voltage = 3-ph. 500 V AC		Components for the power section		Components for the field circuit	
		Commutating reactor	Phase fuses	Commutating reactor	Fuses
Rated drive converter DC current I_N A	Order No.	Order No.	Order No.	Order No.	Order No.
1000	**6RA7090-6GS22-0**	**4EU3921-6BA00**	1)	**4EM6100-2CB**	**5SD480**
1600	**6RA7093-4GS22-0**	**4EU4521-0AK00**	1)	**4EM6100-2CB**	**3NE1802-0**
2000	**6RA7095-4GS22-0**	**4EU4521-0AK00**	1)	**4EM6100-2CB**	**3NE1802-0**
2000	**6RA7095-4GS22-0**	**4EU5021-0AA00**	1)	**4EM6100-2CB**	**3NE1802-0**
3200	**6RA7093-4GS22-0**2)	**4EU3921-7BA00**3)	1)	**4EM6100-2CB**	**3NE1802-0**
1000	**6RA7090-6GS22-0**	**4EU3921-6BA00**	1)	**4EM6100-3CB**	**5SD480**
1600	**6RA7093-4GS22-0**	**4EU4521-0AK00**	1)	**4EM6100-3CB**	**3NE1802-0**
2000	**6RA7095-4GS22-0**	**4EU4521-0AK00**	1)	**4EM6100-3CB**	**3NE1802-0**
2000	**6RA7095-4GS22-0**	**4EU5021-0AA00**	1)	**4EM6100-3CB**	**3NE1802-0**
3200	**6RA7093-4GS22-0**2)	**4EU3921-7BA00**3)	1)	**4EM6100-3CB**	**3NE1802-0**
1600	**6RA7093-4GS22-0**	**4EU3921-7BA00**	1)	**4EM5005-7CB**	**3NE1802-0**
2000	**6RA7095-4GS22-0**	**4EU4521-0AK00**	1)	**4EM5005-7CB**	**3NE1802-0**
2000	**6RA7095-4GS22-0**	**4EU5021-0AA00**	1)	**4EM5005-7CB**	**3NE1802-0**
3200	**6RA7093-4GS22-0**2)	**4EU3921-7BA00**3)	1)	**4EM5005-7CB**	**3NE1802-0**
3200	**6RA7093-4GS22-0**2)	**4EU4321-4CA00**3)	1)	**4EM5005-7CB**	**3NE1802-0**
1600	**6RA7093-4GS22-0**	**4EU3621-7BA00**	1)	**4EM5005-8CB**	**3NE1802-0**
2000	**6RA7095-4GS22-0**	**4EU4521-0AK00**	1)	**4EM5005-8CB**	**3NE1802-0**
2000	**6RA7095-4GS22-0**	**4EU5021-0AA00**	1)	**4EM5005-8CB**	**3NE1802-0**
3200	**6RA7093-4GS22-0**2)	**4EU4321-4CA00**3)	1)	**4EM5005-8CB**	**3NE1802-0**
3200	**6RA7093-4GS22-0**2)	**4EU4321-5CA00**3)	1)	**4EM5005-8CB**	**3NE1802-0**
1600	**6RA7093-4GS22-0**	**4EU4321-4CA00**	1)	**4EM6100-2CB**	**3NE1802-0**
2000	**6RA7095-4GS22-0**	**4EU4521-0AK00**	1)	**4EM6100-2CB**	**3NE1802-0**
2000	**6RA7095-4GS22-0**	**4EU5021-0AA00**	1)	**4EM6100-2CB**	**3NE1802-0**
3200	**6RA7093-4GS22-0**2)	**4EU4321-4CA00**3)	1)	**4EM6100-2CB**	**3NE1802-0**
3200	**6RA7093-4GS22-0**2)	**4EU4321-5CA00**3)	1)	**4EM6100-2CB**	**3NE1802-0**
1600	**6RA7093-4GS22-0**	**4EU3921-7BA00**	1)	**4EM6100-2CB**	**3NE1802-0**
2000	**6RA7095-4GS22-0**	**4EU4521-0AK00**	1)	**4EM6100-2CB**	**3NE1802-0**
2000	**6RA7095-4GS22-0**	**4EU5021-0AA00**	1)	**4EM6100-2CB**	**3NE1802-0**
3200	**6RA7093-4GS22-0**2)	**4EU4321-4CA00**3)	1)	**4EM6100-2CB**	**3NE1802-0**
3200	**6RA7093-4GS22-0**2)	**4EU4321-0AX00**3)	1)	**4EM6100-2CB**	**3NE1802-0**
1600	**6RA7093-4GS22-0**	**4EU4321-4CA00**	1)	**4EM6100-3CB**	**3NE1802-0**
2000	**6RA7095-4GS22-0**	**4EU4521-0AK00**	1)	**4EM6100-3CB**	**3NE1802-0**
2000	**6RA7095-4GS22-0**	**4EU5021-0AA00**	1)	**4EM6100-3CB**	**3NE1802-0**
3200	**6RA7093-4GS22-0**2)	**4EU4321-4CA00**3)	1)	**4EM6100-3CB**	**3NE1802-0**
3200	**6RA7093-4GS22-0**2)	**4EU4321-0AX00**3)	1)	**4EM6100-3CB**	**3NE1802-0**

1) Fuses are included in the unit, no external semiconductor fuses are required.
2) Two SIMOREG units are connected in parallel.
3) Two commutating reactors are required.

Field weakening

The motor Order Nos. are valid for field-weakening speeds n_F up to $1.15 \cdot n_N$. For higher field-weakening speeds, additional codes are required, and more precisely "C05" for $n_F > 1.15 \cdot n_N$ up to $1.7 \cdot n_N$ and "C06" for $n_F > 1.7 \cdot n_N$.

The motors can be operated with rated output P_N up to the field-weakening speed $n_{Fmax.}$. The output must be reduced (de-rating) for higher speeds.

Motor-drive converter assignment

The overload capacity of the drives is calculated from the ratio between the rated drive converter current and the rated motor current.

For higher overload capacities, refer to Catalog DA 21.

For overload capacity of the motors, refer to the Engineering Information, Page 4/2.

Selection- and Ordering Data

Rated supply voltage 3-ph. 500 V AC
Rated armature voltage 520 V DC, 4 quadrant operation

Motor data
Rated armature voltage $V_{a\,N}$ = 520 V
Rated field voltage $V_{field\,N}$ = 310 V

Shaft height	Rated speed n_N RPM	Rated output P_N kW	Rated torque M_N Nm	Max. field-weakening speed $n_{Fmax.}$ RPM	Order No.	Approx. efficiency η %	Rated current I_N A	Field power P_{err} kW	Max. permissible operating speed n_{mech} RPM	Moment of inertia J kg/m²	Weight 1**GG** kg	Weight 1**GH**, kg	Weight 1**HS** kg	Terminal box
355	620	**265**	4080	1510	**1..5 352-5NA4.-7MV5**	91	555	3.2	2000	12	2370	2280	2630	1XB7 710
	885	**355**	3840	1800	**1..5 352-5ND4.-7MV5**	93	725	3.2	2000	12	2370	2280	2630	1XB7 710
	1010	**376**	3560	1890	**1..5 352-5NE4.-7MV5**	93	765	3.2	2000	12	2370	2280	2630	1XB7 710
	1120	**415**	3540	1850	**1..5 352-5NF4.-7MV5**	94	840	3.2	2000	12	2370	2280	2630	1XB7 710
	1460	**428**	2800	1800	**1..5 352-5NH4.-7MV5**	94	860	3.2	1800	12	2370	2280	2630	1XB7 710
	482	**266**	5250	1300	**1..5 354-5NA4.-7MV5**	90	560	4.1	1800	14	2680	2590	2950	1XB7 710
	695	**355**	4880	1580	**1..5 354-5ND4.-7MV5**	92	730	4.1	1800	14	2680	2590	2950	1XB7 710
	795	**400**	4800	1570	**1..5 354-5NE4.-7MV5**	93	815	4.1	1800	14	2680	2590	2950	1XB7 710
	875	**432**	4720	1570	**1..5 354-5NF4.-7MV5**	93	880	4.1	1800	14	2680	2590	2950	1XB7 710
	1150	**498**	4140	1700	**1..5 354-5NH4.-7MV5**	94	1000	4.1	1800	14	2680	2590	2950	1XB7 710
400	474	**292**	5900	1310	**1..5 402-5NA4.-7MV5**	89	615	3.9	1800	21	3060	2930	3310	1XB7 710
	620	**364**	5600	1450	**1..5 402-5NC4.-7MV5**	92	755	3.9	1800	21	3060	2930	3310	1XB7 710
	875	**495**	5400	1490	**1..5 402-5NF4.-7MV5**	93	1010	3.9	1800	21	3060	2930	3310	1XB7 710
	995	**545**	5250	1510	**1..5 402-5NG4.-7MV5**	94	1100	3.9	1700	21	3060	2930	3310	1XB7 710
	1120	**575**	4900	1500	**1..5 402-5NH4.-7MV5**	94	1160	3.9	1700	21	3060	2930	3310	1XB7 710
	1370	**625**	4360	1700	**1..5 402-5NJ4.-7MV5**	95	1250	3.9	1700	21	3060	2930	3310	1XB7 710
	376	**292**	7400	1130	**1..5 404-5NA4.-7MV5**	88	625	4.4	1800	24	3460	3330	3710	1XB7 710
	535	**408**	7300	1270	**1..5 404-5ND4.-7MV5**	91	850	4.4	1800	24	3460	3330	3710	1XB7 710
	610	**456**	7150	1320	**1..5 404-5NE4.-7MV5**	92	935	4.4	1800	24	3460	3330	3710	1XB7 710
	695	**505**	6950	1290	**1..5 404-5NF4.-7MV5**	93	1040	4.4	1800	24	3460	3330	3710	1XB7 710
	795	**565**	6800	1300	**1..5 404-5NG4.-7MV5**	93	1150	4.4	1700	24	3460	3330	3710	1XB7 710
	890	**600**	6450	1270	**1..5 404-5NH4.-7MV5**	94	1220	4.4	1700	24	3460	3330	3710	1XB7 710
	1090	**680**	5950	1570	**1..5 404-5NJ4.-7MV5**	95	1370	4.4	1700	24	3460	3330	3710	1XB7 710
	310	**292**	9000	995	**1..5 406-5NA4.-7MV5**	87	630	4.9	1600	27	3870	3740	4130	1XB7 710
	408	**370**	8650	1110	**1..5 406-5NC4.-7MV5**	90	780	4.9	1600	27	3870	3740	4130	1XB7 710
	505	**464**	8750	1160	**1..5 406-5NE4.-7MV5**	91	960	4.9	1600	27	3870	3740	4130	1XB7 710
	580	**500**	8250	1160	**1..5 406-5NF4.-7MV5**	92	1030	4.9	1600	27	3870	3740	4130	1XB7 710
	655	**580**	8450	1130	**1..5 406-5NG4.-7MV5**	93	1190	4.9	1600	27	3870	3740	4130	1XB7 710
	905	**720**	7600	1360	**1..5 406-5NJ4.-7MV5**	94	1450	4.9	1600	27	3870	3740	4130	1XB7 710
500	438	**375**	8200	1180	**1..5 500-5EA4.-7MV5**	90	790	5	1800	55	4150	3950	4550	1XB7 710
	745	**605**	7750	1530	**1..5 500-5EL4.-7MV5**	93	1230	5	1800	55	4150	3950	4550	1XB7 942
	875	**660**	7200	1560	**1..5 500-5EN4.-7MV5**	94	1340	5	1800	55	4150	3950	4550	1XB7 942
	1070	**750**	6700	1580	**1..5 500-5ES4.-7MV5**	94	1510	5	1800	55	4150	3950	4550	1XB7 942
	1240	**815**	6300	1620	**1..5 500-5EV4.-7MV5**	94	1640	5	1800	55	4150	3950	4550	1XB7 942
	325	**380**	11200	985	**1..5 501-5EA4.-7MV5**	89	810	5.5	1800	65	4650	4450	5050	1XB7 710
	565	**645**	10900	1280	**1..5 501-5EL4.-7MV5**	93	1320	5.5	1800	65	4650	4450	5050	1XB7 942
	655	**715**	10400	1280	**1..5 501-5EN4.-7MV5**	93	1450	5.5	1800	65	4650	4450	5050	1XB7 942
	795	**840**	10100	1270	**1..5 501-5ES4.-7MV5**	94	1700	5.5	1800	65	4650	4450	5050	1XB7 942
	930	**925**	9500	1300	**1..5 501-5EV4.-7MV5**	94	1860	5.5	1800	65	4650	4450	5050	1XB7 942
	254	**376**	14100	855	**1..5 502-5EA4.-7MV5**	87	810	6.8	1800	75	5100	4900	5500	1XB7 710
	442	**655**	14200	1120	**1..5 502-5EL4.-7MV5**	92	1350	6.8	1800	75	5100	4900	5500	1XB7 942
	515	**730**	13500	1110	**1..5 502-5EN4.-7MV5**	93	1490	6.8	1800	75	5100	4900	5500	1XB7 942
	625	**870**	13300	1090	**1..5 502-5ES4.-7MV5**	94	1770	6.8	1800	75	5100	4900	5500	1XB7 942
	730	**950**	12400	1130	**1..5 502-5EV4.-7MV5**	94	1920	6.8	1800	75	5100	4900	5500	1XB7 942

- **Separate ventilation using**

stand., radially-mounted, separately-driven fan	**G G**
separately-mounted, separately-driven fan*)	**G H**
mounted air-to-water heat exchanger	**H S**

- **Type of construction**

IM B 3	**0**
IM B 35 (up to frame size 400)	**6**

*) Not included in the scope of supply.

Drive converter data Rated supply voltage = 3-ph. 500 V AC		**Components for the power section**			**Components for the field circuit**	
		Commutating reactor	Phase fuses	DC-Fuses	Commutating reactor	Fuses
Rated drive converter DC current I_N A	Order No.	Order No.	Order No.	Order No.	Order No.	Order No.
600	**6RA7085-6GV62-0**	**4EU3621-6CA10**	**3NE3336**	**3NE3336**	**4EM4911-8CB**	**5SD440**
850	**6RA7087-6GV62-0**	**4EU3621-8CA00**	**3NE3338-8**	**3NE3334-0B**[1])	**4EM4911-8CB**	**5SD480**
850	**6RA7087-6GV62-0**	**4EU3621-8CA00**	**3NE3338-8**	**3NE3334-0B**[1])	**4EM4911-8CB**	**5SD480**
1100	**6RA7090-6GV62-0**	**4EU3921-6BA00**	[2])	[2])	**4EM4911-8CB**	**5SD480**
1100	**6RA7090-6GV62-0**	**4EU3921-6BA00**	[2])	[2])	**4EM4911-8CB**	**5SD480**
600	**6RA7085-6GV62-0**	**4EU3621-6CA10**	**3NE3336**	**3NE3336**	**4EM4912-1CB**	**5SD440**
850	**6RA7087-6GV62-0**	**4EU3621-8CA00**	**3NE3338-8**	**3NE3334-0B**[1])	**4EM4912-1CB**	**5SD480**
1100	**6RA7091-6GV62-0**	**4EU3921-6BA00**	[2])	[2])	**4EM4912-1CB**	**5SD480**
1100	**6RA7090-6GV62-0**	**4EU3921-7BA00**	[2])	[2])	**4EM4912-1CB**	**5SD480**
1100	**6RA7090-6GV62-0**	**4EU4321-4CA00**	[2])	[2])	**4EM4912-1CB**	**5SD480**
850	**6RA7087-6GV62-0**	**4EU3621-7CA00**	**3NE3338-8**	**3NE3334-0B**[1])	**4EM4912-1CB**	**5SD480**
850	**6RA7087-6GV62-0**	**4EU3621-8CA00**	**3NE3338-8**	**3NE3334-0B**[1])	**4EM4912-1CB**	**5SD480**
1100	**6RA7090-6GV62-0**	**4EU4321-4CA00**	[2])	[2])	**4EM4912-1CB**	**5SD480**
1600	**6RA7093-6GV62-0**	**4EU4321-4CA00**	[2])	[2])	**4EM4912-1CB**	**3NE1802-0**
1600	**6RA7093-4GV62-0**	**4EU4321-5CA00**	[2])	[2])	**4EM4912-1CB**	**3NE1802-0**
1600	**6RA7093-4GV62-0**	**4EU4321-0AX00**	[2])	[2])	**4EM4912-1CB**	**3NE1802-0**
850	**6RA7087-6GV62-0**	**4EU3621-7CA00**	**3NE3338-8**	**3NE3334-0B**[1])	**4EM5000-2CB**	**5SD480**
1100	**6RA7090-6GV62-0**	**4EU3921-6BA00**	[2])	[2])	**4EM5000-2CB**	**5SD480**
1100	**6RA7090-6GV62-0**	**4EU3921-7BA00**	[2])	[2])	**4EM5000-2CB**	**5SD480**
1100	**6RA7090-6GV62-0**	**4EU4321-4CA00**	[2])	[2])	**4EM5000-2CB**	**5SD480**
1600	**6RA7093-4GV62-0**	**4EU4321-5CA00**	[2])	[2])	**4EM5000-2CB**	**3NE1802-0**
1600	**6RA7093-4GV62-0**	**4EU4321-5CA00**	[2])	[2])	**4EM5000-2CB**	**3NE1802-0**
1600	**6RA7093-4GV62-0**	**4EU4521-0AK00**	[2])	[2])	**4EM5000-2CB**	**3NE1802-0**
850	**6RA7087-6GV62-0**	**4EU3621-7CA00**	**3NE3338-8**	**3NE3334-0B**[1])	**4EM5005-6CB**	**5SD480**
850	**6RA7087-6GV62-0**	**4EU3921-6BA00**	**3NE3338-8**	**3NE3334-0B**[1])	**4EM5005-6CB**	**5SD480**
1100	**6RA7090-6GV62-0**	**4EU3921-7BA00**	[2])	[2])	**4EM5005-6CB**	**5SD480**
1100	**6RA7090-6GV62-0**	**4EU4321-4CA00**	[2])	[2])	**4EM5005-6CB**	**5SD480**
1600	**6RA7093-4GV62-0**	**4EU4321-5CA00**	[2])	[2])	**4EM5005-6CB**	**3NE1802-0**
1600	**6RA7093-4GV62-0**	**4EU4521-0AK00**	[2])	[2])	**4EM5005-6CB**	**3NE1802-0**
1100	**6RA7090-6GV62-0**	**4EU3921-6BA00**	[2])	[2])	**4EM5005-6CB**	**5SD480**
1600	**6RA7093-4GV62-0**	**4EU4321-0AX00**	[2])	[2])	**4EM5005-6CB**	**3NE1802-0**
1600	**6RA7093-4GV62-0**	**4EU4521-0AK00**	[2])	[2])	**4EM5005-6CB**	**3NE1802-0**
2000	**6RA7095-4GV62-0**	**4EU4521-0AK00**	[2])	[2])	**4EM5005-6CB**	**3NE1802-0**
2000	**6RA7095-4GV62-0**	**4EU5021-0AA00**	[2])	[2])	**4EM5005-6CB**	**3NE1802-0**
1100	**6RA7090-6GV62-0**	**4EU3921-6BA00**	[2])	[2])	**4EM5005-6CB**	**5SD480**
1600	**6RA7093-4GV62-0**	**4EU4521-0AK00**	[2])	[2])	**4EM5005-6CB**	**3NE1802-0**
1600	**6RA7093-4GV62-0**	**4EU4521-0AK00**	[2])	[2])	**4EM5005-6CB**	**3NE1802-0**
2000	**6RA7095-4GV62-0**	**4EU5021-0AA00**	[2])	[2])	**4EM5005-6CB**	**3NE1802-0**
2000	**6RA7095-4GV62-0**	**4EU5021-0AA00**	[2])	[2])	**4EM5005-6CB**	**3NE1802-0**
1100	**6RA7090-6GV62-0**	**4EU3921-6BA00**	[2])	[2])	**4EM5005-8CB**	**5SD480**
1600	**6RA7093-4GV62-0**	**4EU4521-0AK00**	[2])	[2])	**4EM5005-8CB**	**3NE1802-0**
1600	**6RA7093-4GV62-0**	**4EU4521-0AK00**	[2])	[2])	**4EM5005-8CB**	**3NE1802-0**
2000	**6RA7095-4GV62-0**	**4EU5021-0AA00**	[2])	[2])	**4EM5005-8CB**	**3NE1802-0**
2000	**6RA7095-4GV62-0**	**4EU5021-0AA00**	[2])	[2])	**4EM5005-8CB**	**3NE1802-0**

1) Two SIMOREG units are connected in parallel.

2) Fuses are included in the unit, no external semiconductor fuses are required.

Field weakening

The motor Order Nos. are valid for field-weakening speeds n_F up to $1.15 \cdot n_N$. For higher field-weakening speeds, additional codes are required, and more precisely "C05" for $n_F > 1.15 \cdot n_N$ up to $1.7 \cdot n_N$ and "C06" for $n_F > 1.7 \cdot n_N$.

The motors can be operated with rated output P_N up to the field-weakening speed $n_{Fmax.}$. The output must be reduced (de-rating) for higher speeds.

Motor-drive converter assignment

The overload capacity of the drives is calculated from the ratio between the rated drive converter current and the rated motor current.

For higher overload capacities, refer to Catalog DA 21.

For overload capacity of the motors, refer to the Engineering Information, Page 4/2.

Selection- and Ordering Data

Rated supply voltage 3-ph. 500 V AC
Rated armature voltage 520 V DC, 4 quadrant operation

Motor data
Rated armature voltage $V_{a\,N}$ = 520 V
Rated field voltage $V_{field\,N}$ = 310 V

Shaft height	Rated speed n_N RPM	Rated output P_N kW	Rated torque M_N Nm	Max. field-weakening speed $n_{Fmax.}$ RPM	Order No.	Approx. efficiency η %	Rated current I_N A	Field power P_{err} kW	Max. permissible operating speed n_{mech} RPM	Moment of inertia J kg/m²	Weight 1**GG**, kg	1**GH**, kg	1**HS** kg	Terminal box
500	208	**372**	17100	755	**1..5 503-5EA4.-7MV5**	86	815	7.6	1700	85	5800	5600	6200	1XB7 710
	366	**660**	17200	995	**1..5 503-5EL4.-7MV5**	91	1370	7.6	1700	85	5800	5600	6200	1XB7 942
	425	**745**	16700	975	**1..5 503-5EN4.-7MV5**	92	1530	7.6	1700	85	5800	5600	6200	1XB7 942
	520	**875**	16100	965	**1..5 503-5ES4.-7MV5**	93	1780	7.6	1700	85	5800	5600	6200	1XB7 942
	605	**955**	15100	1010	**1..5 503-5EV4.-7MV5**	94	1930	7.6	1700	85	5800	5600	6200	1XB7 942
	175	**368**	20000	675	**1..5 504-5EA4.-7MV5**	85	815	9.3	1700	94	6300	6100	6700	1XB7 710
	308	**660**	20500	895	**1..5 504-5EL4.-7MV5**	90	1380	9.3	1700	94	6300	6100	6700	1XB7 942
	360	**745**	19800	880	**1..5 504-5EN4.-7MV5**	91	1540	9.3	1700	94	6300	6100	6700	1XB7 942
	440	**880**	19100	865	**1..5 504-5ES4.-7MV5**	93	1800	9.3	1700	94	6300	6100	6700	1XB7 942
	515	**950**	17600	915	**1..5 504-5EV4.-7MV5**	93	1920	9.3	1700	94	6300	6100	6700	1XB7 942
630	236	**452**	18300	925	**1..5 631-5EA4.-7MV5**	89	960	5.6	1500	174	7450	7200	7950	1XB7 710
	385	**755**	18700	1020	**1..5 631-5EL4.-7MV5**	92	1550	5.6	1500	174	7450	7200	7950	1XB7 942
	425	**830**	18700	995	**1..5 631-5EN4.-7MV5**	93	1700	5.6	1500	174	7450	7200	7950	1XB7 942
	515	**965**	17900	1010	**1..5 631-5ES4.-7MV5**	94	1960	5.6	1500	174	7450	7200	7950	1XB7 942
	580	**1060**	17500	1090	**1..5 631-5EV4.-7MV5**	94	2140	5.6	1500	174	7450	7200	7950	1XB7 942
	185	**452**	23400	740	**1..5 632-5EA4.-7MV5**	88	970	6.8	1500	199	8250	8000	8750	1XB7 710
	304	**755**	23800	905	**1..5 632-5EL4.-7MV5**	92	1560	6.8	1500	199	8250	8000	8750	1XB7 942
	335	**855**	24400	865	**1..5 632-5EN4.-7MV5**	92	1760	6.8	1500	199	8250	8000	8750	1XB7 942
	406	**1010**	23800	870	**1..5 632-5ES4.-7MV5**	93	2060	6.8	1500	199	8250	8000	8750	1XB7 942
	458	**1110**	23200	950	**1..5 632-5EV4.-7MV5**	94	2250	6.8	1500	199	8250	8000	8750	1XB7 942
	154	**452**	28000	615	**1..5 633-5EA4.-7MV5**	87	980	7.1	1300	226	9350	9100	9850	1XB7 710
	254	**755**	28400	820	**1..5 633-5EL4.-7MV5**	91	1570	7.1	1300	226	9350	9100	9850	1XB7 942
	280	**860**	29400	775	**1..5 633-5EN4.-7MV5**	92	1780	7.1	1300	226	9350	9100	9850	1XB7 942
	340	**1020**	28600	780	**1..5 633-5ES4.-7MV5**	93	2080	7.1	1300	226	9350	9100	9850	1XB7 942
	382	**1140**	28500	845	**1..5 633-5EV4.-7MV5**	93	2320	7.1	1300	226	9350	9100	9850	1XB7 942
	131	**446**	32500	525	**1..5 634-5EA4.-7MV5**	86	980	7.4	1300	251	10150	9900	10650	1XB7 710
	218	**755**	33000	745	**1..5 634-5EL4.-7MV5**	91	1580	7.4	1300	251	10150	9900	10650	1XB7 942
	240	**855**	34000	705	**1..5 634-5EN4.-7MV5**	91	1780	7.4	1300	251	10150	9900	10650	1XB7 942
	292	**1010**	33000	715	**1..5 634-5ES4.-7MV5**	92	2080	7.4	1300	251	10150	9900	10650	1XB7 942
	328	**1170**	34000	755	**1..5 634-5EV4.-7MV5**	93	2400	7.4	1300	251	10150	9900	10650	1XB7 942
	105	**442**	40200	420	**1..5 635-5EA4.-7MV5**	84	985	9.2	1300	289	11500	11250	12000	1XB7 710
	175	**750**	41000	655	**1..5 635-5EL4.-7MV5**	89	1590	9.2	1300	289	11500	11250	12000	1XB7 942
	193	**850**	42000	625	**1..5 635-5EN4.-7MV5**	90	1790	9.2	1300	289	11500	11250	12000	1XB7 942
	235	**1010**	41000	625	**1..5 635-5ES4.-7MV5**	91	2100	9.2	1300	289	11500	11250	12000	1XB7 942
	265	**1170**	42200	665	**1..5 635-5EV4.-7MV5**	92	2420	9.2	1300	289	11500	11250	12000	1XB7 942

- **Separate ventilation using**

stand., radially-mounted, separately-driven fan	**G G**
separately-mounted, separately-driven fan*)	**G H**
mounted air-to-water heat exchanger	**H S**

- **Type of construction**

IM B 3	**0**
IM B 35 (up to frame size 400)	**6**

*) Not included in the scope of supply.

Drive converter data Rated supply voltage = 3-ph. 500 V AC		Components for the power section			Components for the field circuit	
		Commutating reactor	Phase fuses	DC-Fuses	Commutating reactor	Fuses
Rated drive converter DC current I_N A	Order No.	Order No.	Order No.	Order No.	Order No.	Order No.
1100	**6RA7090-6GV62-0**	**4EU3921-6BA00**	1)	1)	**4EM6100-2CB**	**5SD480**
1600	**6RA7093-4GV62-0**	**4EU4521-0AK00**	1)	1)	**4EM6100-2CB**	**3NE1802-0**
2000	**6RA7095-4GV62-0**	**4EU4521-0AK00**	1)	1)	**4EM6100-2CB**	**3NE1802-0**
2000	**6RA7095-4GV62-0**	**4EU5021-0AA00**	1)	1)	**4EM6100-2CB**	**3NE1802-0**
2000	**6RA7095-4GV62-0**	**4EU5021-0AA00**	1)	1)	**4EM6100-2CB**	**3NE1802-0**
1100	**6RA7090-6GV62-0**	**4EU3921-6BA00**	1)	1)	**4EM6100-3CB**	**5SD480**
1600	**6RA7093-4GV62-0**	**4EU4521-0AK00**	1)	1)	**4EM6100-3CB**	**3NE1802-0**
2000	**6RA7095-4GV62-0**	**4EU4521-0AK00**	1)	1)	**4EM6100-3CB**	**3NE1802-0**
2000	**6RA7095-4GV62-0**	**4EU5021-0AA00**	1)	1)	**4EM6100-3CB**	**3NE1802-0**
2000	**6RA7095-4GV62-0**	**4EU5021-0AA00**	1)	1)	**4EM6100-3CB**	**3NE1802-0**
1100	**6RA7090-6GV62-0**	**4EU3921-7BA00**	1)	1)	**4EM5005-7CB**	**5SD480**
2000	**6RA7095-4GV62-0**	**4EU4521-0AK00**	1)	1)	**4EM5005-7CB**	**3NE1802-0**
2000	**6RA7095-4GV62-0**	**4EU5021-0AA00**	1)	1)	**4EM5005-7CB**	**3NE1802-0**
2200	**6RA7090-6GV62-0**2)	**4EU4321-4CA00**3)	1)	1)	**4EM5005-7CB**	**5SD480**
3200	**6RA7093-4GV62-0**2)	**4EU4321-4CA00**3)	1)	1)	**4EM5005-7CB**	**3NE1802-0**
1100	**6RA7090-6GV62-0**	**4EU3921-7BA00**	1)	1)	**4EM5005-8CB**	**5SD480**
2000	**6RA7095-4GV62-0**	**4EU4521-0AK00**	1)	1)	**4EM5005-8CB**	**3NE1802-0**
2000	**6RA7095-4GV62-0**	**4EU5021-0AA00**	1)	1)	**4EM5005-8CB**	**3NE1802-0**
3200	**6RA7093-4GV62-0**2)	**4EU4321-4CA00**3)	1)	1)	**4EM5005-8CB**	**3NE1802-0**
3200	**6RA7093-4GV62-0**2)	**4EU4321-5CA00**3)	1)	1)	**4EM5005-8CB**	**3NE1802-0**
1100	**6RA7090-6GV62-0**	**4EU3921-7BA00**	1)	1)	**4EM5100-2CB**	**5SD480**
2000	**6RA7095-4GV62-0**	**4EU4521-0AK00**	1)	1)	**4EM5100-2CB**	**3NE1802-0**
2000	**6RA7095-4GV62-0**	**4EU5021-0AA00**	1)	1)	**4EM5100-2CB**	**3NE1802-0**
2200	**6RA7090-6GV62-0**2)	**4EU4321-4CA00**3)	1)	1)	**4EM5100-2CB**	**5SD480**
3200	**6RA7093-4GV62-0**2)	**4EU4321-0AX00**3)	1)	1)	**4EM5100-2CB**	**3NE1802-0**
1100	**6RA7090-6GV62-0**	**4EU3921-7BA00**	1)	1)	**4EM5100-2CB**	**5SD480**
2000	**6RA7095-4GV62-0**	**4EU4521-0AK00**	1)	1)	**4EM5100-2CB**	**3NE1802-0**
2000	**6RA7095-4GV62-0**	**4EU5021-0AA00**	1)	1)	**4EM5100-2CB**	**3NE1802-0**
3200	**6RA7093-4GV62-0**2)	**4EU4321-4CA00**3)	1)	1)	**4EM5100-2CB**	**3NE1802-0**
3200	**6RA7093-4GV62-0**2)	**4EU4321-5CA00**3)	1)	1)	**4EM5100-2CB**	**3NE1802-0**
1100	**6RA7090-6GV62-0**	**4EU4321-4CA00**	1)	1)	**4EM6100-3CB**	**5SD480**
2000	**6RA7095-4GV62-0**	**4EU4521-0AK00**	1)	1)	**4EM6100-3CB**	**3NE1802-0**
2000	**6RA7095-4GV62-0**	**4EU5021-0AA00**	1)	1)	**4EM6100-3CB**	**3NE1802-0**
3200	**6RA7093-4GV62-0**2)	**4EU4321-4CA00**3)	1)	1)	**4EM6100-3CB**	**3NE1802-0**
3200	**6RA7093-4GV62-0**2)	**4EU4321-5CA00**3)	1)	1)	**4EM6100-3CB**	**3NE1802-0**

1) Fuses are included in the unit, no external semiconductor fuses are required.
2) Two SIMOREG units are connected in parallel.
3) Two commutating reactors are required.

Field weakening

The motor Order Nos. are valid for field-weakening speeds n_F up to $1.15 \cdot n_N$. For higher field-weakening speeds, additional codes are required, and more precisely "C05" for $n_F > 1.15 \cdot n_N$ up to $1.7 \cdot n_N$ and "C06" for $n_F > 1.7 \cdot n_N$.

The motors can be operated with rated output P_N up to the field-weakening speed $n_{Fmax.}$. The output must be reduced (de-rating) for higher speeds.

Motor-drive converter assignment

The overload capacity of the drives is calculated from the ratio between the rated drive converter current and the rated motor current.

For higher overload capacities, refer to Catalog DA 21.

For overload capacity of the motors, refer to the Engineering Information, Page 4/2.

Selection- and Ordering Data

Rated supply voltage 3-ph. 690 V AC
Rated armature voltage 810 V DC, 1 quadrant operation

Motor data
Rated armature voltage $V_{a\,N}$ = 810 V
Rated field voltage $V_{field\,N}$ = 310 V

Shaft height	Rated speed n_N RPM	Rated output P_N kW	Rated torque M_N Nm	Max. field-weakening speed $n_{Fmax.}$ RPM	Order No.	Approx. efficiency η %	Rated current I_N A	Field power P_{err} kW	Max. permissible operating speed n_{mech} RPM	Moment of inertia J kg/m²	Weight 1**GG**, kg	1**GH**, kg	1**HS** kg	Terminal box
355	990	**400**	3860	1580	**1..5 352-5NA4.-2YV5**	93	520	3,2	2000	12	2370	2280	2630	1XB7 710
	1410	**478**	3240	2000	**1..5 352-5ND4.-2YV5**	95	615	3,2	2000	12	2370	2280	2630	1XB7 710
	1620	**444**	2620	2000	**1..5 352-5NE4.-2YV5**	95	570	3,2	2000	12	2370	2280	2630	1XB7 710
	775	**415**	5100	1330	**1..5 354-5NA4.-2YV5**	93	545	4,1	1800	14	2680	2590	2950	1XB7 710
	1100	**530**	4600	1660	**1..5 354-5ND4.-2YV5**	94	685	4,1	1800	14	2680	2590	2950	1XB7 710
	1270	**530**	3980	1800	**1..5 354-5NE4.-2YV5**	95	680	4,1	1800	14	2680	2590	2950	1XB7 710
400	765	**454**	5650	1340	**1..5 402-5NA4.-2YV5**	93	595	3,9	1800	21	3060	2930	3310	1XB7 710
	995	**540**	5200	1530	**1..5 402-5NC4.-2YV5**	94	700	3,9	1800	21	3060	2930	3310	1XB7 710
	1390	**680**	4680	1650	**1..5 402-5NF4.-2YV5**	95	875	3,9	1800	21	3060	2930	3310	1XB7 710
	610	**460**	7200	1160	**1..5 404-5NA4.-2YV5**	92	605	4,4	1800	24	3460	3330	3710	1XB7 710
	855	**620**	6950	1330	**1..5 404-5ND4.-2YV5**	94	805	4,4	1800	24	3460	3330	3710	1XB7 710
	970	**680**	6700	1390	**1..5 404-5NE4.-2YV5**	94	880	4,4	1800	24	3460	3330	3710	1XB7 710
	1110	**725**	6250	1390	**1..5 404-5NF4.-2YV5**	95	935	4,4	1800	24	3460	3330	3710	1XB7 710
	505	**465**	8800	1010	**1..5 406-5NA4.-2YV5**	91	620	4,9	1600	27	3870	3740	4130	1XB7 710
	660	**570**	8250	1150	**1..5 406-5NC4.-2YV5**	93	745	4,9	1600	27	3870	3740	4130	1XB7 710
	805	**700**	8300	1220	**1..5 406-5NE4.-2YV5**	94	910	4,9	1600	27	3870	3740	4130	1XB7 710
	920	**765**	7950	1190	**1..5 406-5NF4.-2YV5**	94	990	4,9	1600	27	3870	3740	4130	1XB7 710
500	705	**570**	7700	1230	**1..5 500-5EA4.-2YV5**	93	745	5	1800	55	4150	3950	4550	1XB7 710
	1190	**835**	6700	1670	**1..5 500-5EL4.-2YV5**	95	1070	5	1800	55	4150	3950	4550	1XB7 942
	1390	**850**	5850	1700	**1..5 500-5EN4.-2YV5**	95	1090	5	1800	55	4150	3950	4550	1XB7 942
	525	**600**	10900	1000	**1..5 501-5EA4.-2YV5**	92	795	5,5	1800	65	4650	4450	5050	1XB7 710
	895	**925**	9850	1370	**1..5 501-5EL4.-2YV5**	95	1190	5,5	1800	65	4650	4450	5050	1XB7 942
	1040	**995**	9150	1400	**1..5 501-5EN4.-2YV5**	95	1280	5,5	1800	65	4650	4450	5050	1XB7 942
	412	**605**	14000	855	**1..5 502-5EA4.-2YV5**	91	805	6,8	1800	75	5100	4900	5500	1XB7 710
	710	**955**	12800	1200	**1..5 502-5EL4.-2YV5**	94	1230	6,8	1800	75	5100	4900	5500	1XB7 942
	820	**1050**	12200	1200	**1..5 502-5EN4.-2YV5**	95	1350	6,8	1800	75	5100	4900	5500	1XB7 942
	340	**605**	17000	750	**1..5 503-5EA4.-2YV5**	91	810	7,6	1700	85	5800	5600	6200	1XB7 710
	585	**985**	16100	1050	**1..5 503-5EL4.-2YV5**	94	1280	7,6	1700	85	5800	5600	6200	1XB7 942
	680	**1090**	15300	1040	**1..5 503-5EN4.-2YV5**	94	1410	7,6	1700	85	5800	5600	6200	1XB7 942
	286	**600**	20000	675	**1..5 504-5EA4.-2YV5**	90	810	9,3	1700	94	6300	6100	6700	1XB7 710
	496	**995**	19200	940	**1..5 504-5EL4.-2YV5**	93	1300	9,3	1700	94	6300	6100	6700	1XB7 942
	575	**1110**	18400	930	**1..5 504-5EN4.-2YV5**	94	1440	9,3	1700	94	6300	6100	6700	1XB7 942
630	380	**725**	18200	925	**1..5 631-5EA4.-2YV5**	92	955	5,6	1500	174	7450	7200	7950	1XB7 710
	615	**1120**	17400	1070	**1..5 631-5EL4.-2YV5**	95	1450	5,6	1500	174	7450	7200	7950	1XB7 942
	675	**1210**	17100	1060	**1..5 631-5EN4.-2YV5**	95	1560	5,6	1500	174	7450	7200	7950	1XB7 942
	300	**730**	23200	810	**1..5 632-5EA4.-2YV5**	92	970	6,8	1500	199	8250	8000	8750	1XB7 710
	486	**1170**	23000	925	**1..5 632-5EL4.-2YV5**	94	1520	6,8	1500	199	8250	8000	8750	1XB7 942
	535	**1270**	22600	910	**1..5 632-5EN4.-2YV5**	95	1640	6,8	1500	199	8250	8000	8750	1XB7 942
	250	**735**	28000	720	**1..5 633-5EA4.-2YV5**	91	985	7,1	1300	226	9350	9100	9850	1XB7 710
	406	**1200**	28200	820	**1..5 633-5EL4.-2YV5**	94	1560	7,1	1300	226	9350	9100	9850	1XB7 942
	446	**1320**	28200	800	**1..5 633-5EN4.-2YV5**	94	1710	7,1	1300	226	9350	9100	9850	1XB7 942
	214	**725**	32400	660	**1..5 634-5EA4.-2YV5**	90	975	7,4	1300	251	10150	9900	10650	1XB7 710
	348	**1200**	33000	750	**1..5 634-5EL4.-2YV5**	93	1570	7,4	1300	251	10150	9900	10650	1XB7 942
	382	**1360**	34000	710	**1..5 634-5EN4.-2YV5**	94	1770	7,4	1300	251	10150	9900	10650	1XB7 942
	465	**1580**	32400	472	**1..5 634-5ES4.-2YV5**	95	2040	7,4	1300	251	10150	9900	10650	1XB7 942
	172	**725**	40200	575	**1..5 635-5EA4.-2YV5**	89	985	9,2	1300	289	11500	11250	12000	1XB7 710
	282	**1200**	40600	660	**1..5 635-5EL4.-2YV5**	93	1580	9,2	1300	289	11500	11250	12000	1XB7 942
	310	**1360**	41800	625	**1..5 635-5EN4.-2YV5**	93	1780	9,2	1300	289	11500	11250	12000	1XB7 942
	376	**1610**	40800	500	**1..5 635-5ES4.-2YV5**	94	2100	9,2	1300	289	11500	11250	12000	1XB7 942

- **Separate ventilation using**

stand., radially-mounted, separately-driven fan	**G G**
separately-mounted, separately-driven fan*)	**G H**
mounted air-to-water heat exchanger	**H S**

- **Type of construction**

IM B 3	**0**
IM B 35 (up to frame size 400)	**6**

*) Not included in the scope of supply.

Drive converter data Rated supply voltage = 3-ph. 690 V AC		Components for the power section		Components for the field circuit	
		Commutating reactor	Phase fuses	Commutating reactor	Fuses
Rated drive converter DC current I_N A	Order No.	Order No.	Order No.	Order No.	Order No.
720	**6RA7086-6KS22-0**	**4EU3621-3DA00**	**3NE3337-8**	**4EM4911-8CB**	**5SD480**
720	**6RA7086-6KS22-0**	**4EU3621-4DA00**	**3NE3337-8**	**4EM4911-8CB**	**5SD480**
720	**6RA7086-6KS22-0**	**4EU3621-4DA00**	**3NE3337-8**	**4EM4911-8CB**	**5SD480**
720	**6RA7086-6KS22-0**	**4EU3621-3DA00**	**3NE3337-8**	**4EM4912-1CB**	**5SD480**
950	**6RA7088-6KS22-0**	**4EU3921-8BA00**	1)	**4EM4912-1CB**	**5SD480**
950	**6RA7088-6KS22-0**	**4EU3921-8BA00**	1)	**4EM4912-1CB**	**5SD480**
720	**6RA7086-6KS22-0**	**4EU3621-4DA00**	**3NE3337-8**	**4EM4912-1CB**	**5SD480**
950	**6RA7088-6KS22-0**	**4EU3921-0CA00**	1)	**4EM4912-1CB**	**5SD480**
950	**6RA7088-6KS22-0**	**4EU4321-1DA00**	1)	**4EM4912-1CB**	**5SD480**
720	**6RA7086-6KS22-0**	**4EU3621-4DA00**	**3NE3337-8**	**4EM5000-2CB**	**5SD480**
950	**6RA7088-6KS22-0**	**4EU4321-0DA00**	1)	**4EM5000-2CB**	**5SD480**
950	**6RA7088-6KS22-0**	**4EU4321-1DA00**	1)	**4EM5000-2CB**	**5SD480**
1500	**6RA7093-4KS22-0**	**4EU4321-1DA00**	1)	**4EM5000-2CB**	**3NE1802-0**
720	**6RA7086-6KS22-0**	**4EU3921-8BA00**	**3NE3337-8**	**4EM5005-6CB**	**5SD480**
950	**6RA7088-6KS22-0**	**4EU3921-0CA00**	1)	**4EM5005-6CB**	**5SD480**
1500	**6RA7093-4KS22-0**	**4EU4321-1DA00**	1)	**4EM5005-6CB**	**3NE1802-0**
1500	**6RA7093-4KS22-0**	**4EU4321-2DA00**	1)	**4EM5005-6CB**	**3NE1802-0**
950	**6RA7088-6KS22-0**	**4EU3921-0CA00**	1)	**4EM5005-6CB**	**5SD480**
1500	**6RA7093-4KS22-0**	**4EU4321-2DA00**	1)	**4EM5005-6CB**	**3NE1802-0**
1500	**6RA7093-4KS22-0**	**4EU4321-2DA00**	1)	**4EM5005-6CB**	**3NE1802-0**
950	**6RA7088-6KS22-0**	**4EU4321-0DA00**	1)	**4EM5005-6CB**	**5SD480**
1500	**6RA7093-4KS22-0**	**4EU4321-0AY00**	1)	**4EM5005-6CB**	**3NE1802-0**
1500	**6RA7093-4KS22-0**	**4EU4521-0AP00**	1)	**4EM5005-6CB**	**3NE1802-0**
950	**6RA7088-6KS22-0**	**4EU4321-0DA00**	1)	**4EM5005-8CB**	**5SD480**
1500	**6RA7093-4KS22-0**	**4EU4521-0AP00**	1)	**4EM5005-8CB**	**3NE1802-0**
1500	**6RA7093-4KS22-0**	**4EU4521-0AP00**	1)	**4EM5005-8CB**	**3NE1802-0**
950	**6RA7088-6KS22-0**	**4EU4321-0DA00**	1)	**4EM6100-2CB**	**5SD480**
1500	**6RA7093-4KS22-0**	**4EU4521-0AP00**	1)	**4EM6100-2CB**	**3NE1802-0**
2000	**6RA7095-4KS22-0**	**4EU4521-0AP00**	1)	**4EM6100-2CB**	**3NE1802-0**
950	**6RA7088-6KS22-0**	**4EU4321-0DA00**	1)	**4EM6100-3CB**	**5SD480**
1500	**6RA7093-4KS22-0**	**4EU4521-0AP00**	1)	**4EM6100-3CB**	**3NE1802-0**
2000	**6RA7095-4KS22-0**	**4EU4521-0AP00**	1)	**4EM6100-3CB**	**3NE1802-0**
1500	**6RA7093-4KS22-0**	**4EU4321-2DA00**	1)	**4EM5005-7CB**	**3NE1802-0**
2000	**6RA7095-4KS22-0**	**4EU4521-0AP00**	1)	**4EM5005-7CB**	**3NE1802-0**
2000	**6RA7095-4KS22-0**	**4EU4521-0AP00**	1)	**4EM5005-7CB**	**3NE1802-0**
1500	**6RA7093-4KS22-0**	**4EU4321-1DA00**	1)	**4EM5005-8CB**	**3NE1802-0**
2000	**6RA7095-4KS22-0**	**4EU4521-0AP00**	1)	**4EM5005-8CB**	**3NE1802-0**
2000	**6RA7095-4KS22-0**	**4EU5121-0AA00**	1)	**4EM5005-8CB**	**3NE1802-0**
1500	**6RA7093-4KS22-0**	**4EU4321-2DA00**	1)	**4EM6100-2CB**	**3NE1802-0**
2000	**6RA7095-4KS22-0**	**4EU4521-0AP00**	1)	**4EM6100-2CB**	**3NE1802-0**
2000	**6RA7095-4KS22-0**	**4EU5121-0AA00**	1)	**4EM6100-2CB**	**3NE1802-0**
1500	**6RA7093-4KS22-0**	**4EU4321-1DA00**	1)	**4EM6100-2CB**	**3NE1802-0**
2000	**6RA7095-4KS22-0**	**4EU4521-0AP00**	1)	**4EM6100-2CB**	**3NE1802-0**
2000	**6RA7095-4KS22-0**	**4EU5121-0AA00**	1)	**4EM6100-2CB**	**3NE1802-0**
3000	**6RA7093-4KS22-0**[2])	**4EU4321-2DA00**[3])	1)	**4EM6100-2CB**	**3NE1802-0**
1500	**6RA7093-4KS22-0**	**4EU4321-2DA00**	1)	**4EM6100-3CB**	**3NE1802-0**
2000	**6RA7095-4KS22-0**	**4EU4521-0AP00**	1)	**4EM6100-3CB**	**3NE1802-0**
2000	**6RA7095-4KS22-0**	**4EU5121-0AA00**	1)	**4EM6100-3CB**	**3NE1802-0**
3000	**6RA7093-4KS22-0**[2])	**4EU4321-2DA00**[3])	1)	**4EM6100-3CB**	**3NE1802-0**

1) Fuses are included in the unit, no external semiconductor fuses are required.

2) Two SIMOREG units are connected in parallel.

3) Two commutating reactors are required.

Field weakening

The motor Order Nos. are valid for field-weakening speeds n_F up to $1.15 \cdot n_N$. For higher field-weakening speeds, additional codes are required, and more precisely "C05" for $n_F > 1.15 \cdot n_N$ up to $1.7 \cdot n_N$ and "C06" for $n_F > 1.7 \cdot n_N$.

The motors can be operated with rated output P_N up to the field-weakening speed $n_{Fmax.}$. The output must be reduced (de-rating) for higher speeds.

Motor-drive converter assignment

The overload capacity of the drives is calculated from the ratio between the rated drive converter current and the rated motor current.

For higher overload capacities, refer to Catalog DA 21.

For overload capacity of the motors, refer to the Engineering Information, Page 4/2.

3

Selection- and Ordering Data

Rated supply voltage 3-ph. 690 V AC
Rated armature voltage 720 V DC, 4 quadrant operation

Motor data
Rated armature voltage $V_{a\,N}$ = 720 V
Rated field voltage $V_{field\,N}$ = 310 V

Shaft height	Rated speed n_N RPM	Rated output P_N kW	Rated torque M_N Nm	Max. field-weakening speed $n_{Fmax.}$ RPM	Order No.	Approx. efficiency η %	Rated current I_N A	Field power P_{err} kW	Max. permissible operating speed n_{mech} RPM	Moment of inertia J kg/m²	Weight 1**GG** kg	1**GH** kg	1**HS** kg	Terminal box
355	875	**354**	3860	1580	**1..5 352-5NA4.-2XV5**	93	520	3.2	2000	12	2370	2280	2630	1XB7 710
	1250	**425**	3250	2000	**1..5 352-5ND4.-2XV5**	94	615	3.2	2000	12	2370	2280	2630	1XB7 710
	1430	**394**	2640	2000	**1..5 352-5NE4.-2XV5**	95	570	3.2	2000	12	2370	2280	2630	1XB7 710
	1570	**428**	2600	2000	**1..5 352-5NF4.-2XV5**	94	620	3.2	2000	12	2370	2280	2630	1XB7 710
	685	**366**	5100	1330	**1..5 354-5NA4.-2XV5**	92	545	4.1	1800	14	2680	2590	2950	1XB7 710
	980	**468**	4560	1660	**1..5 354-5ND4.-2XV5**	94	680	4.1	1800	14	2680	2590	2950	1XB7 710
	1120	**470**	4000	1800	**1..5 354-5NE4.-2XV5**	94	680	4.1	1800	14	2680	2590	2950	1XB7 710
	1230	**520**	4040	1770	**1..5 354-5NF4.-2XV5**	94	755	4.1	1800	14	2680	2590	2950	1XB7 710
400	675	**402**	5700	1340	**1..5 402-5NA4.-2XV5**	92	595	3.9	1800	21	3060	2930	3310	1XB7 710
	880	**478**	5200	1530	**1..5 402-5NC4.-2XV5**	94	700	3.9	1800	21	3060	2930	3310	1XB7 710
	1230	**605**	4700	1650	**1..5 402-5NF4.-2XV5**	95	875	3.9	1800	21	3060	2930	3310	1XB7 710
	1400	**665**	4540	1670	**1..5 402-5NG4.-2XV5**	95	960	3.9	1700	21	3060	2930	3310	1XB7 710
	535	**406**	7250	1160	**1..5 404-5NA4.-2XV5**	91	610	4.4	1800	24	3460	3330	3710	1XB7 710
	755	**550**	6950	1320	**1..5 404-5ND4.-2XV5**	93	810	4.4	1800	24	3460	3330	3710	1XB7 710
	860	**600**	6650	1400	**1..5 404-5NE4.-2XV5**	94	875	4.4	1800	24	3460	3330	3710	1XB7 710
	985	**640**	6200	1400	**1..5 404-5NF4.-2XV5**	94	930	4.4	1800	24	3460	3330	3710	1XB7 710
	1120	**705**	6000	1420	**1..5 404-5NG4.-2XV5**	95	1020	4.4	1700	24	3460	3330	3710	1XB7 710
	444	**410**	8800	1010	**1..5 406-5NA4.-2XV5**	91	620	4.9	1600	27	3870	3740	4130	1XB7 710
	580	**500**	8250	1150	**1..5 406-5NC4.-2XV5**	93	740	4.9	1600	27	3870	3740	4130	1XB7 710
	710	**620**	8350	1220	**1..5 406-5NE4.-2XV5**	94	910	4.9	1600	27	3870	3740	4130	1XB7 710
	815	**675**	7900	1200	**1..5 406-5NF4.-2XV5**	94	985	4.9	1600	27	3870	3740	4130	1XB7 710
	925	**750**	7750	1210	**1..5 406-5NG4.-2XV5**	94	1090	4.9	1600	27	3870	3740	4130	1XB7 710
500	620	**510**	7850	1220	**1..5 500-5EA4.-2XV5**	92	760	5	1800	55	4150	3950	4550	1XB7 710
	1050	**750**	6800	1650	**1..5 500-5EL4.-2XV5**	94	1090	5	1800	55	4150	3950	4550	1XB7 942
	1230	**755**	5850	1700	**1..5 500-5EN4.-2XV5**	94	1090	5	1800	55	4150	3950	4550	1XB7 942
	464	**530**	10900	1000	**1..5 501-5EA4.-2XV5**	91	795	5.5	1800	65	4650	4450	5050	1XB7 710
	795	**830**	9950	1360	**1..5 501-5EL4.-2XV5**	94	1210	5.5	1800	65	4650	4450	5050	1XB7 942
	925	**885**	9150	1400	**1..5 501-5EN4.-2XV5**	95	1280	5.5	1800	65	4650	4450	5050	1XB7 942
	362	**535**	14100	855	**1..5 502-5EA4.-2XV5**	91	810	6.8	1800	75	5100	4900	5500	1XB7 710
	625	**855**	13100	1190	**1..5 502-5EL4.-2XV5**	94	1250	6.8	1800	75	5100	4900	5500	1XB7 942
	725	**930**	12300	1200	**1..5 502-5EN4.-2XV5**	94	1350	6.8	1800	75	5100	4900	5500	1XB7 942
	300	**530**	16900	755	**1..5 503-5EA4.-2XV5**	90	805	7.6	1700	85	5800	5600	6200	1XB7 710
	520	**880**	16200	1040	**1..5 503-5EL4.-2XV5**	93	1290	7.6	1700	85	5800	5600	6200	1XB7 942
	600	**965**	15400	1040	**1..5 503-5EN4.-2XV5**	94	1410	7.6	1700	85	5800	5600	6200	1XB7 942
	252	**525**	19900	680	**1..5 504-5EA4.-2XV5**	89	805	9.3	1700	94	6300	6100	6700	1XB7 710
	438	**890**	19400	930	**1..5 504-5EL4.-2XV5**	93	1310	9.3	1700	94	6300	6100	6700	1XB7 942
	510	**985**	18400	925	**1..5 504-5EN4.-2XV5**	94	1440	9.3	1700	94	6300	6100	6700	1XB7 942

- **Separate ventilation using**

stand., radially-mounted, separately-driven fan	**G G**
separately-mounted, separately-driven fan*)	**G H**
mounted air-to-water heat exchanger	**H S**

- **Type of construction**

IM B 3	**0**
IM B 35 (up to frame size 400)	**6**

*) Not included in the scope of supply.

Drive converter data Rated supply voltage = 3-ph. 690 V AC		Components for the power section			Components for the field circuit	
		Commutating reactor	Phase fuses	DC-Fuses	Commutating reactor	Fuses
Rated drive converter DC current I_N A	Order No.	Order No.	Order No.	Order No.	Order No.	Order No.
760	**6RA7086-6KV62-0**	**4EU3621-3DA00**	**3NE3337-8**	**3NE3334-0B**[1])	**4EM4911-8CB**	**5SD480**
760	**6RA7086-6KV62-0**	**4EU3621-4DA00**	**3NE3337-8**	**3NE3334-0B**[1])	**4EM4911-8CB**	**5SD480**
760	**6RA7086-6KV62-0**	**4EU3621-4DA00**	**3NE3337-8**	**3NE3334-0B**[1])	**4EM4911-8CB**	**5SD480**
760	**6RA7086-6KV62-0**	**4EU3921-8BA00**	**3NE3337-8**	**3NE3334-0B**[1])	**4EM4911-8CB**	**5SD480**
760	**6RA7086-6KV62-0**	**4EU3621-3DA00**	**3NE3337-8**	**3NE3334-0B**[1])	**4EM4912-1CB**	**5SD480**
760	**6RA7086-6KV62-0**	**4EU3921-8BA00**	**3NE3337-8**	**3NE3334-0B**[1])	**4EM4912-1CB**	**5SD480**
760	**6RA7086-6KV62-0**	**4EU3921-8BA00**	**3NE3337-8**	**3NE3334-0B**[1])	**4EM4912-1CB**	**5SD480**
1000	**6RA7090-6KV62-0**	**4EU3921-0CA00**	[2])	[2])	**4EM4912-1CB**	**5SD480**
760	**6RA7086-6KV62-0**	**4EU3621-4DA00**	**3NE3337-8**	**3NE3334-0B**[1])	**4EM4912-1CB**	**5SD480**
760	**6RA7086-6KV62-0**	**4EU3921-0CA00**	**3NE3337-8**	**3NE3334-0B**[1])	**4EM4912-1CB**	**5SD480**
1000	**6RA7090-6KV62-0**	**4EU4321-1DA00**	[2])	[2])	**4EM4912-1CB**	**5SD480**
1500	**6RA7093-4KV62-0**	**4EU4321-1DA00**	[2])	[2])	**4EM4912-1CB**	**3NE1802-0**
760	**6RA7086-6KV62-0**	**4EU3621-4DA00**	**3NE3337-8**	**3NE3334-0B**[1])	**4EM5000-2CB**	**5SD480**
1000	**6RA7090-6KV62-0**	**4EU4321-0DA00**	[2])	[2])	**4EM5000-2CB**	**5SD480**
1000	**6RA7090-6KV62-0**	**4EU4321-1DA00**	[2])	[2])	**4EM5000-2CB**	**5SD480**
1000	**6RA7090-6KV62-0**	**4EU4321-1DA00**	[2])	[2])	**4EM5000-2CB**	**5SD480**
1500	**6RA7093-4KV62-0**	**4EU4321-2DA00**	[2])	[2])	**4EM5000-2CB**	**3NE1802-0**
760	**6RA7086-6KV62-0**	**4EU3921-8BA00**	**3NE3337-8**	**3NE3334-0B**[1])	**4EM5005-6CB**	**5SD480**
1000	**6RA7090-6KV62-0**	**4EU3921-0CA00**	[2])	[2])	**4EM5005-6CB**	**5SD480**
1000	**6RA7090-6KV62-0**	**4EU4321-1DA00**	[2])	[2])	**4EM5005-6CB**	**5SD480**
1500	**6RA7093-4KV62-0**	**4EU4321-2DA00**	[2])	[2])	**4EM5005-6CB**	**3NE1802-0**
1500	**6RA7093-4KV62-0**	**4EU4321-2DA00**	[2])	[2])	**4EM5005-6CB**	**3NE1802-0**
1000	**6RA7090-6KV62-0**	**4EU3921-0CA00**	[2])	[2])	**4EM5005-6CB**	**5SD480**
1500	**6RA7093-4KV62-0**	**4EU4321-2DA00**	[2])	[2])	**4EM5005-6CB**	**3NE1802-0**
1500	**6RA7093-4KV62-0**	**4EU4321-2DA00**	[2])	[2])	**4EM5005-6CB**	**3NE1802-0**
1000	**6RA7090-6KV62-0**	**4EU4321-0DA00**	[2])	[2])	**4EM5005-6CB**	**5SD480**
1500	**6RA7093-4KV62-0**	**4EU4321-3DA00**	[2])	[2])	**4EM5005-6CB**	**3NE1802-0**
1500	**6RA7093-4KV62-0**	**4EU4521-0AP00**	[2])	[2])	**4EM5005-6CB**	**3NE1802-0**
1000	**6RA7090-6KV62-0**	**4EU4321-0DA00**	[2])	[2])	**4EM5005-8CB**	**5SD480**
1500	**6RA7093-4KV62-0**	**4EU4521-0AP00**	[2])	[2])	**4EM5005-8CB**	**3NE1802-0**
1500	**6RA7093-4KV62-0**	**4EU4521-0AP00**	[2])	[2])	**4EM5005-8CB**	**3NE1802-0**
1000	**6RA7090-6KV62-0**	**4EU4321-0DA00**	[2])	[2])	**4EM6100-2CB**	**5SD480**
1500	**6RA7093-4KV62-0**	**4EU4521-0AP00**	[2])	[2])	**4EM6100-2CB**	**3NE1802-0**
2000	**6RA7095-4KV62-0**	**4EU4521-0AP00**	[2])	[2])	**4EM6100-2CB**	**3NE1802-0**
1000	**6RA7090-6KV62-0**	**4EU4321-0DA00**	[2])	[2])	**4EM6100-3CB**	**5SD480**
1500	**6RA7093-4KV62-0**	**4EU4521-0AP00**	[2])	[2])	**4EM6100-3CB**	**3NE1802-0**
2000	**6RA7095-4KV62-0**	**4EU4521-0AP00**	[2])	[2])	**4EM6100-3CB**	**3NE1802-0**

1) Two SIMOREG units are connected in parallel.

2) Fuses are included in the unit, no external semiconductor fuses are required.

Field weakening

The motor Order Nos. are valid for field-weakening speeds n_F up to $1.15 \cdot n_N$. For higher field-weakening speeds, additional codes are required, and more precisely "C05" for $n_F > 1.15 \cdot n_N$ up to $1.7 \cdot n_N$ and "C06" for $n_F > 1.7 \cdot n_N$.

The motors can be operated with rated output P_N up to the field-weakening speed $n_{Fmax.}$. The output must be reduced (de-rating) for higher speeds.

Motor-drive converter assignment

The overload capacity of the drives is calculated from the ratio between the rated drive converter current and the rated motor current.

For higher overload capacities, refer to Catalog DA 21.

For overload capacity of the motors, refer to the Engineering Information, Page 4/2.

3

Selection- and Ordering Data

Rated supply voltage 3-ph. 690 V AC
Rated armature voltage 720 V DC, 4 quadrant operation

Motor data
Rated armature voltage $V_{a\,N}$ = 720 V
Rated field voltage $V_{field\,N}$ = 310 V

Shaft height	Rated speed	Rated output	Rated torque	Max. field-weakening speed	Order No.	Approx. effi-ciency	Rated strom	Field power	Max. per-missible operating speed	Moment of inertia	Weight 1**GG**,	1**GH**,	1**HS**	Terminal box
	n_N	P_N	M_N	$n_{Fmax.}$		η	I_N	P_{err}	n_{mech}	J				
	RPM	**kW**	Nm	RPM		%	A	kW	RPM	kg/m^2	kg	kg	kg	
630	335	**640**	18200	925	**1..5 631-5EA4.-2XV5**	92	955	5.6	1500	174	7450	7200	7950	1XB7 710
	545	**995**	17400	1070	**1..5 631-5EL4.-2XV5**	94	1450	5.6	1500	174	7450	7200	7950	1XB7 942
	600	**1080**	17200	1050	**1..5 631-5EN4.-2XV5**	95	1570	5.6	1500	174	7450	7200	7950	1XB7 942
	725	**1220**	16100	1090	**1..5 631-5ES4.-2XV5**	95	1760	5.6	1500	174	7450	7200	7950	1XB7 942
	264	**640**	23200	815	**1..5 632-5EA4.-2XV5**	91	965	6.8	1500	199	8250	8000	8750	1XB7 710
	430	**1040**	23000	925	**1..5 632-5EL4.-2XV5**	94	1520	6.8	1500	199	8250	8000	8750	1XB7 942
	474	**1140**	23000	900	**1..5 632-5EN4.-2XV5**	94	1660	6.8	1500	199	8250	8000	8750	1XB7 942
	575	**1310**	21800	925	**1..5 632-5ES4.-2XV5**	95	1900	6.8	1500	199	8250	8000	8750	1XB7 942
	645	**1400**	20800	670	**1..5 632-5EV4.-2XV5**	95	2020	6.8	1500	199	8250	8000	8750	1XB7 942
	220	**645**	28000	725	**1..5 633-5EA4.-2XV5**	90	980	7.1	1300	226	9350	9100	9850	1XB7 710
	358	**1060**	28200	820	**1..5 633-5EL4.-2XV5**	93	1560	7.1	1300	226	9350	9100	9850	1XB7 942
	395	**1180**	28500	790	**1..5 633-5EN4.-2XV5**	94	1730	7.1	1300	226	9350	9100	9850	1XB7 942
	480	**1340**	26600	825	**1..5 633-5ES4.-2XV5**	95	1950	7.1	1300	226	9350	9100	9850	1XB7 942
	540	**1480**	26200	620	**1..5 633-5EV4.-2XV5**	95	2140	7.1	1300	226	9350	9100	9850	1XB7 942
	188	**640**	32500	655	**1..5 634-5EA4.-2XV5**	89	980	7.4	1300	251	10150	9900	10650	1XB7 710
	308	**1060**	32800	750	**1..5 634-5EL4.-2XV5**	93	1570	7.4	1300	251	10150	9900	10650	1XB7 942
	338	**1200**	34000	710	**1..5 634-5EN4.-2XV5**	93	1770	7.4	1300	251	10150	9900	10650	1XB7 942
	410	**1390**	32400	730	**1..5 634-5ES4.-2XV5**	94	2040	7.4	1300	251	10150	9900	10650	1XB7 942
	462	**1550**	32000	735	**1..5 634-5EV4.-2XV5**	95	2250	7.4	1300	251	10150	9900	10650	1XB7 942
	151	**635**	40200	575	**1..5 635-5EA4.-2XV5**	88	985	9.2	1300	289	11500	11250	12000	1XB7 710
	248	**1060**	40800	660	**1..5 635-5EL4.-2XV5**	92	1580	9.2	1300	289	11500	11250	12000	1XB7 942
	274	**1200**	41800	625	**1..5 635-5EN4.-2XV5**	93	1780	9.2	1300	289	11500	11250	12000	1XB7 942
	332	**1420**	40800	630	**1..5 635-5ES4.-2XV5**	93	2080	9.2	1300	289	11500	11250	12000	1XB7 942
	374	**1610**	41200	680	**1..5 635-5EV4.-2XV5**	94	2350	9.2	1300	289	11500	11250	12000	1XB7 942

- **Separate ventilation using**

stand., radially-mounted, separately-driven fan	**G G**
separately-mounted, separately-driven fan*)	**G H**
mounted air-to-water heat exchanger	**H S**

- **Type of construction**

IM B 3	**0**
IM B 35 (up to frame size 400)	**6**

*) Not included in the scope of supply.

Drive converter data Rated supply voltage = 3-ph. 690 V AC		Components for the power section			Components for the field circuit	
		Commutating reactor	Phase fuses	DC-Fuses	Commutating reactor	Fuses
Rated drive converter DC current I_N A	Order No.	Order No.	Order No.	Order No.	Order No.	Order No.
1500	**6RA7093-4KV62-0**	**4EU4321-1DA00**	1)	1)	**4EM5005-7CB**	**3NE1802-0**
2000	**6RA7095-4KV62-0**	**4EU4521-0AP00**	1)	1)	**4EM5005-7CB**	**3NE1802-0**
2000	**6RA7095-4KV62-0**	**4EU4521-0AP00**	1)	1)	**4EM5005-7CB**	**3NE1802-0**
2000	**6RA7095-4KV62-0**	**4EU5121-0AA00**	1)	1)	**4EM5005-7CB**	**3NE1802-0**
1500	**6RA7093-4KV62-0**	**4EU4321-1DA00**	1)	1)	**4EM5005-8CB**	**3NE1802-0**
2000	**6RA7095-4KV62-0**	**4EU4521-0AP00**	1)	1)	**4EM5005-8CB**	**3NE1802-0**
2000	**6RA7095-4KV62-0**	**4EU5121-0AA00**	1)	1)	**4EM5005-8CB**	**3NE1802-0**
3000	**6RA7093-4KV62-0**2)	**4EU4321-1DA00**3)	1)	1)	**4EM5005-8CB**	**3NE1802-0**
3000	**6RA7093-4KV62-0**2)	**4EU4321-2DA00**3)	1)	1)	**4EM5005-8CB**	**3NE1802-0**
1500	**6RA7093-4KV62-0**	**4EU4321-1DA00**	1)	1)	**4EM5100-2CB**	**3NE1802-0**
2000	**6RA7095-4KV62-0**	**4EU4521-0AP00**	1)	1)	**4EM5100-2CB**	**3NE1802-0**
2000	**6RA7095-4KV62-0**	**4EU5121-0AA00**	1)	1)	**4EM5100-2CB**	**3NE1802-0**
3000	**6RA7093-4KV62-0**2)	**4EU4321-1DA00**3)	1)	1)	**4EM5100-2CB**	**3NE1802-0**
3000	**6RA7093-4KV62-0**2)	**4EU4321-2DA00**3)	1)	1)	**4EM5100-2CB**	**3NE1802-0**
1500	**6RA7093-4KV62-0**	**4EU4321-1DA00**	1)	1)	**4EM5100-2CB**	**3NE1802-0**
2000	**6RA7095-4KV62-0**	**4EU4521-0AP00**	1)	1)	**4EM5100-2CB**	**3NE1802-0**
2000	**6RA7095-4KV62-0**	**4EU5121-0AA00**	1)	1)	**4EM5100-2CB**	**3NE1802-0**
3000	**6RA7093-4KV62-0**2)	**4EU4321-2DA00**3)	1)	1)	**4EM5100-2CB**	**3NE1802-0**
3000	**6RA7093-4KV62-0**2)	**4EU4321-3DA00**3)	1)	1)	**4EM5100-2CB**	**3NE1802-0**
1500	**6RA7093-4KV62-0**	**4EU4321-2DA00**	1)	1)	**4EM6100-3CB**	**3NE1802-0**
2000	**6RA7095-4KV62-0**	**4EU4521-0AP00**	1)	1)	**4EM6100-3CB**	**3NE1802-0**
2000	**6RA7095-4KV62-0**	**4EU5121-0AA00**	1)	1)	**4EM6100-3CB**	**3NE1802-0**
3000	**6RA7093-4KV62-0**2)	**4EU4321-2DA00**3)	1)	1)	**4EM6100-3CB**	**3NE1802-0**
3000	**6RA7093-4KV62-0**2)	**4EU4321-3DA00**3)	1)	1)	**4EM6100-3CB**	**3NE1802-0**

1) Fuses are included in the unit, no external semiconductor fuses are required.

2) Two SIMOREG units are connected in parallel.

3) Two commutating reactors are required.

Field weakening

The motor Order Nos. are valid for field-weakening speeds n_F up to $1.15 \cdot n_N$. For higher field-weakening speeds, additional codes are required, and more precisely "C05" for $n_F > 1.15 \cdot n_N$ up to $1.7 \cdot n_N$ and "C06" for $n_F > 1.7 \cdot n_N$.

The motors can be operated with rated output P_N up to the field-weakening speed $n_{Fmax.}$. The output must be reduced (de-rating) for higher speeds.

Motor-drive converter assignment

The overload capacity of the drives is calculated from the ratio between the rated drive converter current and the rated motor current.

For higher overload capacities, refer to Catalog DA 21.

For overload capacity of the motors, refer to the Engineering Information, Page 4/2.

Motor options

When ordering, the Order No. must be supplemented with a „**–Z**“.

Example:

1GG5 352-5NA40-1W5-Z

+ short code
(several Order Codes can be specified):

K 1 0 + K 5 5

	Option Description		Code
Design			
Terminal boxes	Terminal box arrangement when viewing DE	right left top	• **K10** **K11**[1])
	Cable arrangment drilled for the max. number of components with glands acc. to DIN 46 320 (refer to Page 4/6)		**K55**
Separately-driven fan and air intake for 1GG	Separately-driven fan at NDE and air intake into the fan unit from DE Axially-mounted fan		
		right left top	**G03** **G01** •
	Separately-driven fan at NDE and air entry into the fan unit from NDE Axially-mounted fan 	right left top	**G02** **G00** **G04**
	Separately-driven fan at DE and air intake into the fan unit from DE Axially-mounted fan 	right left top	**G09** **G07** **G11**
	Separately-driven fan at DE and air intake into the fan unit from NDE Axially-mounted fan 	right left top	**G08** **G06** **G10**
Air filters for 1GG	Dry-type filter		**G14**
Duct connection for 1GH	At one end (degree of protection IP 23/IC 17) Duct connection at NDE (air flow from NDE to DE)	right left top	• • •
	Duct connection at DE (air flow from DE to NDE)	right left top	**K64** **K64** **K64**
	Both ends (degree of protection IP 54/IC 37) Both ends (air flow from DE to NDE)		**K48** **K48+K64**
Paint finish	Standard paint finish RAL 7016 Primer only Non-standard paint finish RAL 7016		• **K24** **L53**

• Standard version [1]) Not possible for 1H.

	Option Description	Code
Mounted equipment		
Encoder system	Tachometers (Hübner, Berlin). Output and voltage at 1000 RPM Type TDP 0.2, LT-4 4W, 60 V DC, IM B10, IP 55 Type GTB 9.06 L/420 0.06 W 20 V DC, hollow-shaft design	 **H14** **G28**
	Type POG 9 D 500 (Hübner, Berlin) 2 x 500 pulses per revolution, shifted 90° electrical with respect one another	**G16**
	prepared for mounting tachometers REO 444R, TDP 0.2 L-T and pulse encoders OG9D, POG9D, POG10D	**G71+G91**
Operation and diagnostics		
Extended field control range	$n_F > 1.15\ n_N$ to $1.7\ n_N$ $n_F > 1.7\ n_N$	**C05** **C06**
Industry-sector applications	Paper machine drives Extruder drives Pump motors for water treatment plants Press motors Motors for lifts and cable railways Wire-drawing machines, high-bay racking systems Printing machine drives Rolling-mill drives Cranes	**C34** **C35** **C36** **C37** **C38** **C39** **C40** **C41** **C42**
Anti-condensation heating	230 V AC	**K45**
Visual brush inspection	Servicing covers with inspection window	**L73**
Brush length, limit value	Microswitch, floating signal	**A06**[2] [1]
Temperature rise, limit value	Thermistor motor protection with PTC thermistor for trip: for alarm and trip	 **A11** **A12**[2]
Temperature rise, continuous	Measurement with temperature sensor KTY84-130	**A23**
Air flow for 1GG	Vent-captor air flow monitor V_B = 230 V AC, relay output V_B = 24 V DC, transistor output	 **A09** **A97**[2]

1) Possible up to frame size 400.

2) These functions can all be evaluated in SIMOREG units with terminal expansion.

Drive converter options and accessories

Option Description	Code	Order No.
Technology software in the basic drive	**S00**	
Terminal expansion module (CUD2)	**K01**	**6RX1700-0AK01**
Connecting cable, SIMOVIS PC – PMU (RS 232), 3 m	**–**	**6SX7005-0AB00**
Interface converter SU1 RS 232 – RS 485 including mounting accessories, line supply connection 1-ph. 115 V/230 V AC		**6SX7005-0AA00**
Drive control panel (OP1S)	**–**	**6SE7090-0XX84-2FK0**
Adapter AOP1 for mounting OP1S in a cabinet door including 5 m connecting cable		**6SX7010-0AA00**
Connecting cable PMU-OP1S, 3 m		**6SX7010-0AB03**
Connecting cable PMU-OP1S, 5 m		**6SX7010-0AB05**
Bus adapter for the electronics box (LBA)	**–**	**6SE7090-0XX84-4HA0**
Carrier module (ADB)	**–**	**6SE7090-0XX84-0KA0**
Module, pulse encoder evaluation (SBP)	**–**	**6SX7010-0FA00**
Module, PROFIBUS (CBP)	**–**	**6SX7010-0FF00**
Module, SIMOLINK (SLB)	**–**	**6SX7010-0FJ00**
Technology module T100 including Hardware Instruction Manual without software module	**–**	**6SE7090-0XX87-0BB0**
Hardware Instruction Manual for T100		**6SE7080-0CX87-0BB0**
Software module MS100 "Universal drive" for T100 (EPROM) without Manual		**6SE7098-0XX84-0BB0**
Manual for the software module MS100 "Universal drive"		
• German		**6SE7080-0CX84-0BB0**
• English		**6SE7087-6CX84-0BB0**
• French		**6SE7087-7CX84-0BB0**
• Spain		**6SE7087-8CX84-0BB0**
• Italian		**6SE7087-2CX84-0BB0**
Technology module T400	**–**	**6DD1606-0AD0**
Instruction Manual for SIMOREG		
• German	**D00**	**6RX1700-0AD00**
• Italian	**D72**	**6RX1700-0AD72**
• English	**D76**	**6RX1700-0AD76**
• French	**D77**	**6RX1700-0AD77**
• Spain	**D78**	**6RX1700-0AD78**
Instruction Manual in all of the languages above on the CD-ROM including SIMOVIS	**D64**	**6RX1700-0AD64**

Note: A short guide is supplied with the SIMOREG, but the Instruction Manual must be separately ordered.

Documentation

The following technical documentation is provided with the motors:

- Instruction Manual (1 x).

The following will be supplied when ordered:

- Calculation data sheet (German)
- Certified dimension drawing (German)
- Test report (German/English).

The following technical documentation is included in the scope of supply of the drive converter:

- Short Guide, Instruction Manual are supplied when ordered with the appropriate code (refer above).

The documentation can be separately requested by specifying the following Order Nos.:

Instruction Manuals		Order No.	Languages
DC motors 1G.5	Shaft heights 355, 400	NMA 2741 DE NMA 2741 FS	German/English French/Spain
	Shaft heights 500, 630	NMA 2788 DE	German/English
6RA70 drive converters, options and accessories		Order Nos., refer to the table above	

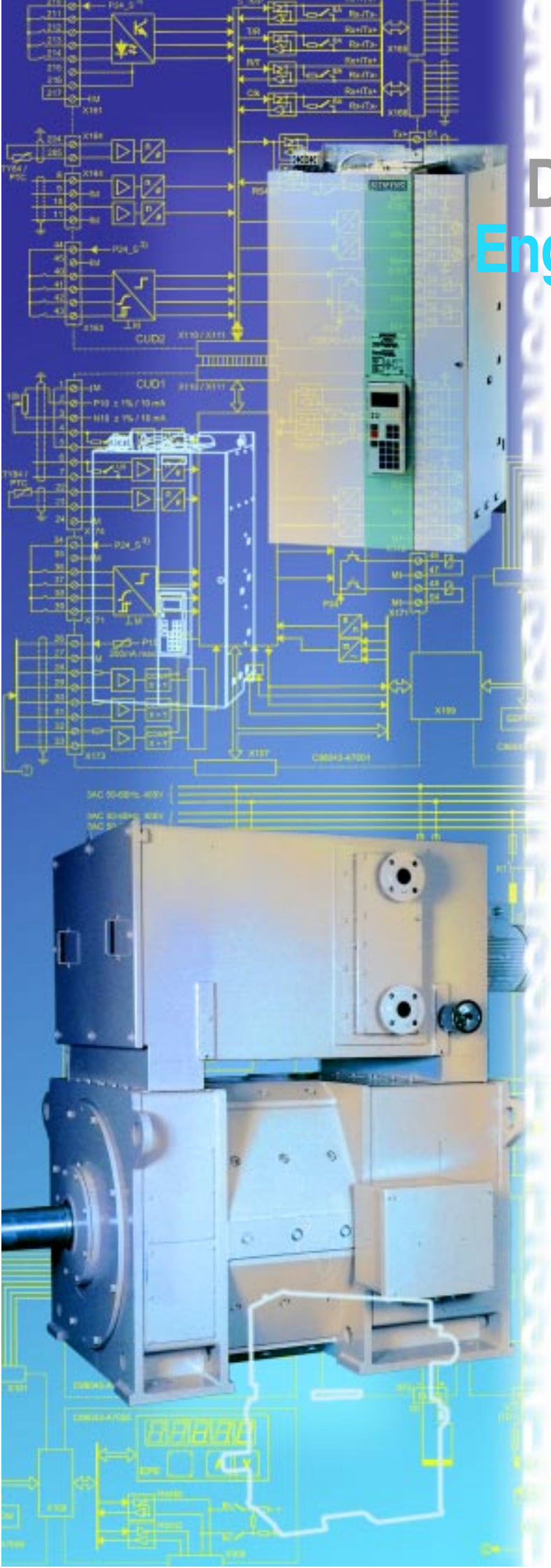

DC Drives
Engineering Instructions

Motors

4/2 • Installation- and Operating Conditions
4/3 • Ventilation, Mounted Equipment
4/5 • Protection and Monitoring
4/6 • Power Connections

Drive Converters

4/7 • Applications, Design, Mode of Operation
4/8 • Block Diagram
4/9 • EMC Desgin

4

Installation- and Operating Conditions

Operating Conditions

The motors are suitable for the following operating conditions:

- Installation altitude ≤ 1000 m (> 1000 m, refer to the adjacent characteristics)
- Cooling air temperature up to 40 °C (> 40 °C, refer to the adjacent characteristics)
- Cooling air must not contain any foreign bodies and aggressive elements
- Maximum permissible vibration levels (refer to the adjacent table).

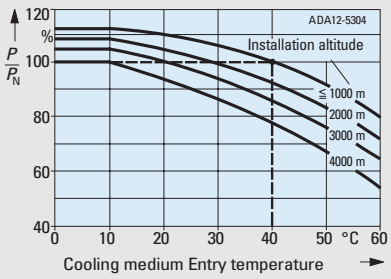

Output changes (top) and speed deviations (bottom) as a function of the installation altitude and the cooling-medium-intake temperature for DC motors.

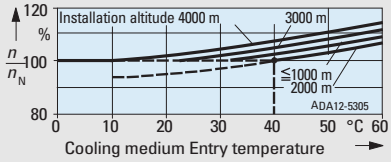

Separately-driven fan motors for cooling-medium temperatures exceeding 45 °C or installation altitudes above 1500 m, on request.

Vibration frequency Hz		Vibration values shaft height up to 160	up to 180
> 6.3	Vibration displacement s (mm)	≤ 0.16	≤ 0.25
6.3 to 63	Vibration velocity V_{RMS} (mm/s)	≤ 4.5	≤ 7.1
> 63	Vibration acceleration a (m/s^2)	≤ 2.55	≤ 4.0

4

Overload capacity

The motors have an overload capacity, as shown in the adjacent table. When the motors are frequently overloaded, it is assumed that the effective load of the motor does not exceed the rated load.

	Overload capacity (referred to P_N and n_N) for compensated motors	
	Torque	Current
	M_{max}/M_N	I_{max}/I_N
15 s	1,8	~ 1,85
5 s	2,1	~ 2,2

Brush lifetime

Brush wear is essentially dependent on the operating- and ambient conditions of the DC motor.

In order to achieve a long brush lifetime, the following conditions should apply:

- Relative air humidity 10 bis 50 %.
- Effective load > 50 % · P_N
- Cooling-air temperature > 10 °C

If the conditions deviate from these, please contact the manufacturer.

Industry-sector applications

The following codes are defined for the following applications (also refer to "Selection- and Ordering Data", Page 3/25):

- Paper-machine drives
- Extruder drives
- Pump motors for water treatment plants
- Press motors (vibration-proof up to 6 g)
- Motors for lifts and cable railways (up to –20 °C KT)
- Wire-drawing machines, high-bay racking systems
- Printing machine drives
- Rolling-mill drives
- Cranes

Paint finish

Anthracite according to RAL 7016.
Motors can be supplied with just a paint primer (code K24). Additional measures are required regarding insulation, surface protection and brush types, if the motors are to be used in environments where there are chemically aggressive gases and vapors (please specify the type and concentration of the gas(es)).

Cooling, duct connection, filter mounting

The cooling air is normally fed from the non-drive end to the drive end where it is discharged through openings to the left and right.
The air flow direction can be reversed (from the drive end to the non drive end). This is recommended for motors operated with weak loads and under harsh ambient conditions (aggressive gases, organic liquids, dust etc.). Under certain circumstances, de-rating will be required (observe the adjacent table).
The fan unit of the 1GG motors can be retrofitted onto 1GH motors.

De-rating is **not** required for the following armature circuits (10th position of the Order No.) if the air flow is from the DE to the NDE:

Motor type **1G.5**	
352 **354**	A to D and F
402 **404** **406**	A to G A to F A to E

For 1GH motors with a separately-driven fan, this separately-driven fan is not included in the scope of supply. The ducts should be dimensioned, so that the motor is provided with a cooling air flow $\dot{V}$ and pressures Δp, as specified in the table.

Motor type **1G.5**	Cooling-air flow $\dot{V}$ m^3/s	Permissible pressure drop Δp for motors 1GG5 mbar	Required pressure Δp for motors 1GH5 mbar
352 **354**	1.3	0.85	17
402 **404** **406**	1.7	0.85	17
500 **501** **502** **503** **504**	2.0	0.7	14
631 **632** **633** **634** **635**	3.0	0.7	13.5

For separately-driven fan units for 1GG- and 1HS motors, the three-phase motors have a supply voltage of 380 V to 420 V AC 50 Hz or (no extra charge) 500 V AC 50 Hz (acc. to EN 60 034 ± 5%).
If other supply voltages are used, three-phase motors are available with non-standard windings; for frequencies other than 50 Hz, a non-standard separately-driven fan will be required.

Filter mounting

A dry-type air filter can be mounted on all 1GG motors without any de-rating. These filters can also be retrofitted.

Technical data of the standard separately-driven fan units

Motor type **1GG5**	Three-phase fan motor **Frame size**	Rated current at 3-ph. 400 VY AC 50 Hz, approx. A	Rated current at 3-ph. 400 VY AC 50 Hz, approx. kW
352 **354**	112M	10	4.6
402 **404** **406**	132S	14.5	7.5
500 **501** **502** **503** **504**	132S	14.5	7.5
631 **632** **633** **634** **635**	132S	14.5	7.5

The motor protection circuit-breaker of the fan motor is set to the maximum current.

Ventilation, mounted equipment

1HS5 motors with air-to-water heat exchanger are cooled using the cooling water and 1 or 2 separately-driven fans, located in the heat-exchanger assembly.

For a cooling-water intake temperature of 25 °C, 1HS5 motors have the same outputs as for 1GH5 motors; other temperatures and outputs on request.

The water connections are mounted as standard on the righthand side (when viewing the drive end).

It is only possible to changeover the heat exchanger for a water connection on the lefthand side for special versions 1 and 2.

If a water analysis is not provided when ordering the motors, a standard heat exchanger is supplied.

Cooling water temperature rise for the standard version up to 10 K, water pressure up to 6 bar (test pressure is 9 bar).

The pressure drop (flow resistance) in the cooling element lies between 300 and 500 mbar

Cooling water flow

For DC motors **1HS5 . . .**	Required cooling water flow l/min
. . . . 352 **. . . . 354**	85
. . . . 402 **. . . . 404** **. . . . 406**	95
. . . . 500 **. . . . 501** **. . . . 502** **. . . . 503** **. . . . 504**	115
. . . . 631 **. . . . 632** **. . . . 633** **. . . . 634**	150
. . . . 635	160

4

Three-phase connection for fan motors

All of the fan motors have a plastic terminal box which is mounted to the fan motor. The terminal box is freely accessible.

Threaded holes for cable glands are provided specified in the adjacent table. Only plastic cable glands may be used.

Assignment of the cable entries in the fan motor terminal boxes

For motors Shaft height	Glands	Max. conductor cross-section mm^2
355	Pg 21	4
400, 500 and **630**	Pg 21	6

Encoders

The following tachometers and pulse encoders can be mounted to the motors:

Tachometers (Hübner Berlin)

TDP 0.2LT-4, 4 W, 60 V DC, IM B10, IP55	(Code H14)
GTB 9.06L/420 K, 0.06 W, DC 20 V	(Code G28)

Pulse encoder (Hübner Berlin)

POG 9 D 500 2 x 500 pulses/revolution Offset through 90° electrical	(Code G16)

The motors are prepared for mounting the following tachometers (incl. mounting components).

REO 444R, REO 444R2, TDP 0,2 LT, POG9 D, POG10 D, OG9 D, FG3, FG4	(Codes G71 + G91)

Diagnostic functions

Function	Specify the Code when ordering	Technique	Possible evaluation	Connection
Temperature rise, continuous		Calculation (I^2t monitoring): Thermal equivalent time constant for DC motors (refer to the diagram). **Thermal equivalent time constant** 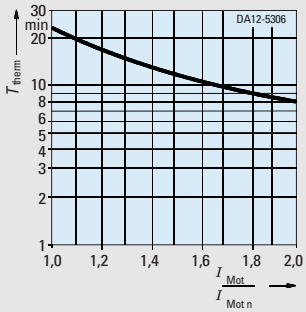	In the SIMOREG unit 6RA70	–
		The thermal equivalent time constant must be known when using the I^2t monitoring in the 6RA70 SIMOREG drive converter		
	A23	Measurement using temperature sensor KTY84-130 in the interpole winding	In the SIMOREG unit 6RA70. 2 limit values, e.g. for alarm and trip, can be entered.	2 terminals on the auxiliary terminal strip in the motor terminal box
Temperature rise, limit value		Thermistor motor protection in the interpole winding	In the SIMOREG unit 6RA70 with terminal expansion: alarm or trip, or	2 terminals on the auxiliary terminal strip in the motor terminal box
	A11	PTC thermistor for trip		
	A12	PTC thermistor for alarm and trip	3RN evaluation unit from Catalog NS K (Part 4): alarm, trip or alarm and trip	4 terminals on the auxiliary terminal strip in the motor terminal box
Brush length limit	**A06** [1])	Microswitch, NC contacts connected in series, signal floating 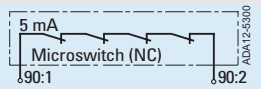	In the SIMOREG unit 6RA70 with terminal expansion or external	2 terminals on the auxiliary terminal strip in the motor terminal box
Air flow	**A09**	Vent-captor air flow monitor, type 3201.51 max. switching current 200 mA V_B = 230 V AC 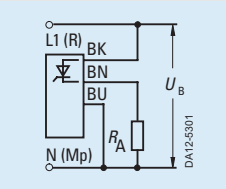	External	In the terminal box of the separately-driven fan motor
	A97	Vent-captor airflow monitor, type 3201.03 max. switching current 500 mA V_B = 24 V DC 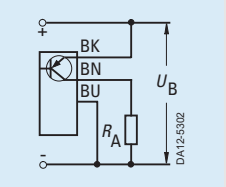	In the SIMOREG unit 6RA70 with terminal expansion (supply from the unit)	In the terminal box of the separately-driven fan motor

1) Possible up to frame size 400.

Power connections

Terminal box	Max. permissible rated current[1])	No. of terminals	Connecting thread (for cable lugs)	Max. conductor cross-section per terminal	Max. No. of cable entries for glands		Cable termination
					to DIN 46 320	to DIN 89 280, form C with metric thread	
Type	A			mm^2			
1XB7 710	1200	2 + 2	M16 + M6	4 x 240	10 x Pg36 + 4 x Pg16[2])	10 x M45 x 2 + 4 x M24 x 1.5	with cable lugs
1XB7 942	2240	2 + 2	M16 + M6	10 x 240	20 x Pg36 + 4 x Pg21[2])	20 x M45 x 2 + 4 x M30 x 2	with cable lugs

Terminal boxes and cable entries

All of the motors have a terminal box, degree of protection IP 55. These accommodate the power connections and include terminals to connect temperature sensors, anti-condensation heaters etc.

Refer to DIN EN 60 204 Part 1 (DIN VDE 0113 Part 1) 06.93 when dimensioning the conductor cross-sections.

Terminal box design

The terminal boxes have a removable cable entry plate. This is normally supplied undrilled. It can be removed to work with the terminal box.

The plate can also be supplied, pre-drilled for the maximum number of cable entries (DIN 46 320) (Code K55).

1) Acc. to DIN 57 100 VDE 0100 Part 523, Table 2, Group 2, de-rating factor 0.7 (current carrying capacity of the cables).

2) Standard version, cable entry plate not drilled.

General information

The following drive converters are used:

for single-quadrant operation the SIMOREG units

6RA70 . . – . . S22-0

for four-quadrant operation the SIMOREG units

6RA70 . . – . . V62-0

6RA70 SIMOREG K drive converters are compact, fully-digital units for three-phase supplies. They provide a controlled supply for the armature- and field circuits of variable-speed DC drives. The rated DC current, specified on the equipment rating plate (= maximum permissible continuous DC current) can be exceeded in operation by 150%. The maximum overload duration depends on the overload current characteristic over time, as well as the previous load condition of the drive converter. This is unit-specific. The overload capability is engineered using Catalog DA21 · 1998.

The units are autonomous as a result of the integrated parameterizing device, and when parameterizing, no additional programming- or measuring equipment is required. Two powerful 16-bit microprocessors handle all of the open- and closed-loop control functions for the armature- and field circuits.

The closed-loop control functions are implemented as program modules in the software. These are inter-linked using parameters.

Further, the units have a series of technological functions, such as, for example, a higher-level technology controller, motorized potentiometer, digital setpoint cascade, closed-loop tension- and ratio control, freely-assignable multipliers and dividers, etc.

T400 technology modules can be used for additional technological functions, for example, winders or synchronous controls. The units have two serial interfaces for control from a PC, service, direct unit coupling or simple coupling to the automation.

The drive converters can be coupled to PROFIBUS via the CBP interface module.

Please refer to Catalog DA21 · 1998 for additional information.

Block diagram

6RA70 SIMOREG drive converters for rated DC currents from 400 to 2000 A

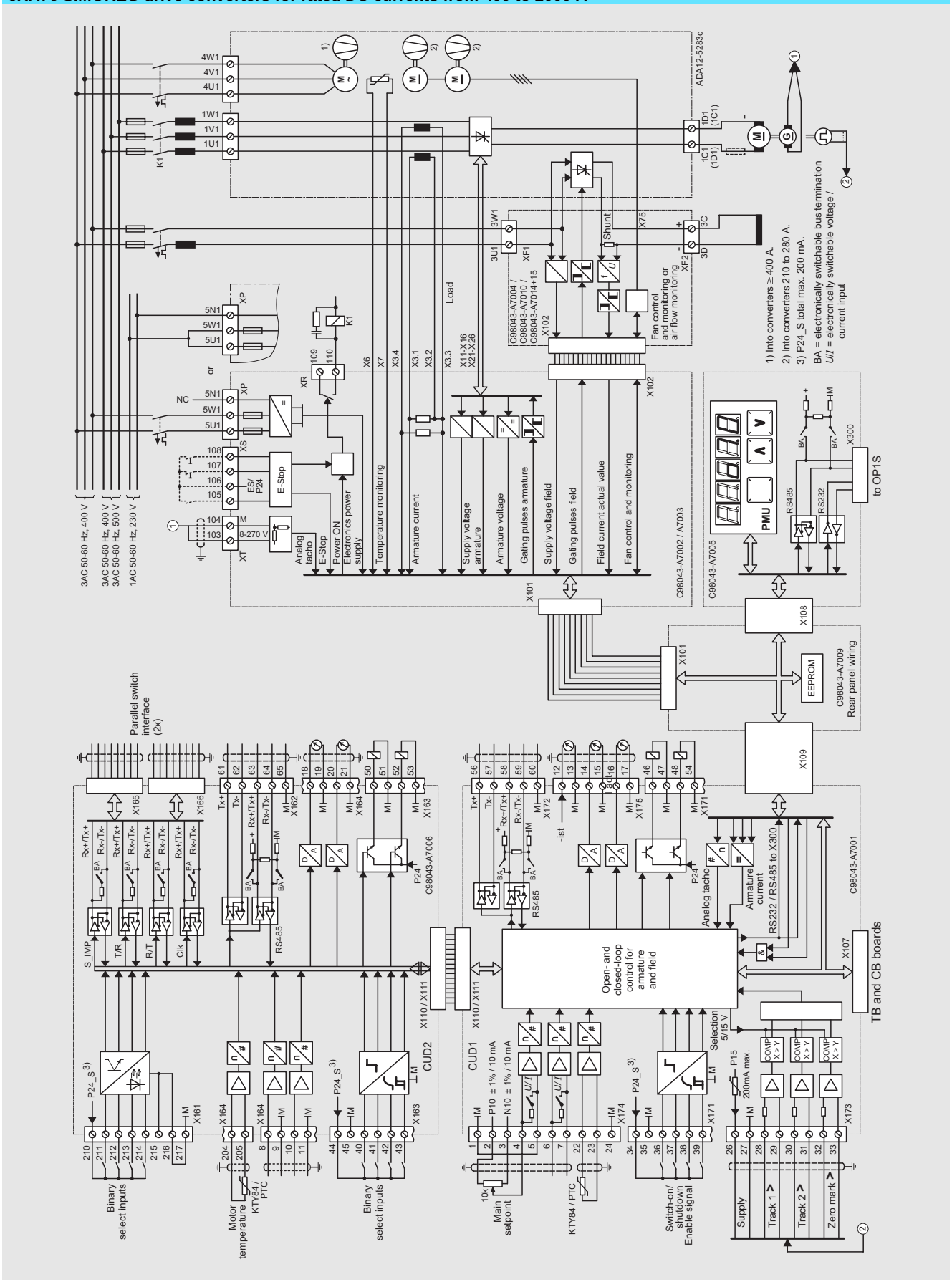

Please refer to Catalog DA21 · 1998 for detailed information regarding EMC-correct installation.

If a drive is part of an overall plant or system, then initially, it does not have to fulfill any specific demands regarding noise emission.
However, the EMC legislation specifies that the plant or system as a whole must be electromagnetically compatible with its environment.

If radio interference suppression level "A1", acc. to EN 55011 is to be maintained, then in addition to the commutating reactors, radio suppression filters are also required.

The following overview provides support when configuring the components and selecting the radio interference suppression filter.

Arrangement of the components in the drive converter unit

6RA70 SIMOREG K units: Arrangement of reactors and filters

1. The commutating reactor in the field circuit is dimensioned for the rated motor field current
2. The commutating reactor in the armature circuit is dimensioned for the rated motor armature current. The line current is 0.82 the DC current.
3. The filter for the field circuit and the electronics power supply is dimensioned for the rated motor field current plus 1.0 A.
4. The filter for the armature circuit is dimensioned for the rated motor armature current. The line current is 0.82x the DC current.

Note
If filters are used to de-couple snubber circuitry, commutating reactors are always required.

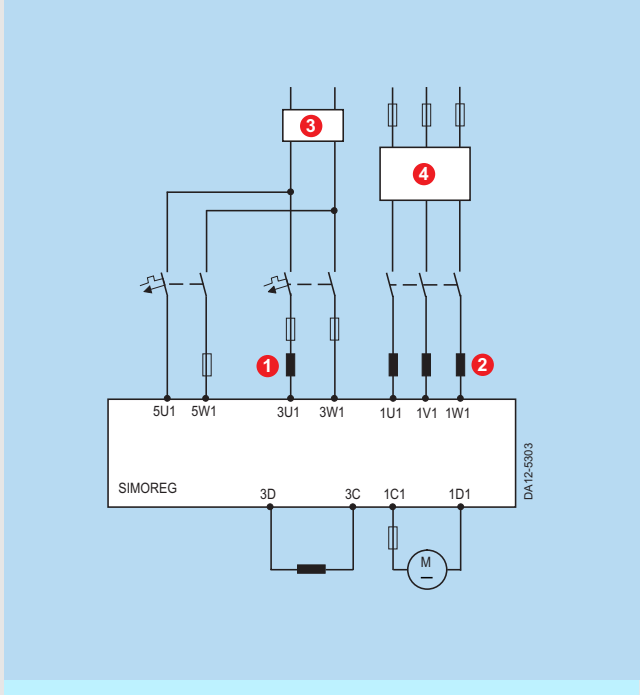

List of recommended radio interference suppression filters

For drive converters connected to a three-phase supply, the line current (filter current) is equal to 0.82 times the DC current.

For drive converters connected to a two-phase supply, two phases are connected to the three-phase filter.
In this case, the line current is the same as the DC current.

Rated current RFI filter	RFI filter Order No.	Terminal cross-section	Weight	Dimensions H x W x D
A		mm^2	kg	mm
12	6SE7021-0ES87-0FB0	10*)	2.2	215 x 90 x 81
18	6SE7021-8ES87-0FB0	10*)	2.2	215 x 90 x 81
36	6SE7023-4ES87-0FB0	25	3.7	245 x 101 x 86
80	6SE7027-2ES87-0FB0	50	9.5	308 x 141 x 141
120	6SE7031-0ES87-0FA0	50	10	348 x 171 x 141
180	6SE7031-8ES87-0FA0	95	13	404 x 171 x 141
500	6SE7033-7ES87-0FA0	Connecting lug	49	590 x 305 x 154
1000	6SE7041-0ES87-0FA0	Connecting lug	90	840 x 465 x 204
1600	6SE7041-6ES87-0FA0	Connecting lug	130	870 x 465 x 204

*) The filters generate leakage currents. A PE connection with 10 mm^2 is required according to DIN VDE 0160.

Important data of the radio interference suppression filter

Rated supply voltage	3 AC 380 to 460 V (± 15 %)
Rated frequency	50/60 Hz (± 6 %)
Operating temperature	0 °C to + 40 °C
Degree of protection	IP 20 (EN 60 529) IP 00 from 500 A

Please refer to the following Instruction Manual for additional data on the filters:

SIMOVERT MASTERDRIVES radio interference suppression filter, EMC filter,
Order No.:
6SE7087–6CX87–0FB0.

DC Drives
Dimension Drawings

5/2 5/4 5/6 5/8

Open, ventilated DC motors
- 1GG5 352 to 1GG5 406
- 1GH5 352 to 1GH5 406
- 1GG5 500 to 1GG5 635
- 1GH5 500 to 1GH5 635

5/10 5/12

Totally enclosed fan-cooled DC motors
- 1HS5 352 to 1HS5 406
- 1HS5 500 to 1HS5 635

5/14 **6RA70 drive converters**

5

Open, ventilated DC motors
1GG5 352 to 1GG5 406

All Types of construction

For Motor Frame size	Type	Dimension designations according to DIN / IEC	a / B	b / A	c / HA	e / BB	f / AB	g_2 / AC	g_4 / –	g_7 / –	g_8 / –	h / H	k / L	k_1 / LC	k_3 / –	k_5 / –	k_6 / –	k_7 / –	k_8 / –	k_9 / –	k_{10} / –	m / BA	m_1 / –	m_2 / –	n / AA	p / HD
355	**1GG5 352**		**770**	**610**	26	1090	705	550	435[1])	915	730	**355**	1730	1831	575	740	215	380	305	140	170	220	220	160	110	720
	1GG5 354		**870**			1190							1830	1931												
400	**1GG5 402**		**800**	**686**	30	1170	795	595	610	1005	820	**400**	1935	1943	705	1040	285	620	510	175	300	250	250	185	110	810
	1GG5 404		**900**			1270							2035	2043												
	1GG5 406		**1000**			1370							2135	2143												

Tachometer mounting

(valid for all types of construction)

For Motor Type	Dimension k_4 when using the tachometer/pulse encoder: 1GU1 051 GTB 9.06L	TDP 0,09LT POG 9D/10D	REO 444R	GMP 1,0L KPG 503	KPG 506	TDP 1,2+ TDP 1,2
1GG5 352	1685	1775	1800	1860	1895	1970
1GG5 354	1785	1875	1900	1960	1995	2070
1GG5 402	1805	1895	1920	1980	2015	2090
1GG5 404	1905	1995	2020	2080	2115	2190
1GG5 406	2005	2095	2120	2180	2215	2290

Type of construction IM B3

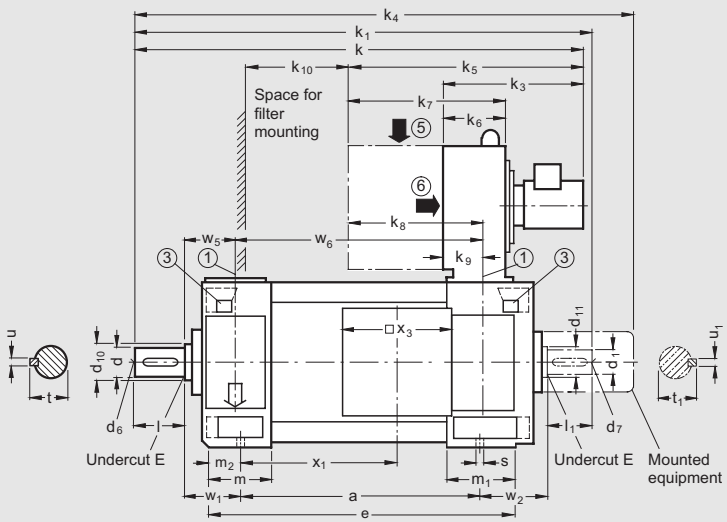

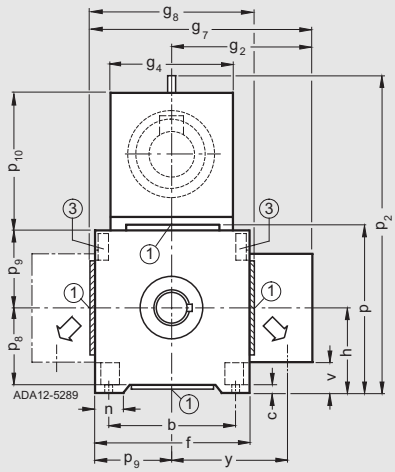

Silencer (not shown) in the fan-silencer arrangement (filter).

Dimensions k_5, k_7 and k_8 (refer above) are increased by the following values when the filter or the filter-silencer are mounted.

Frame size	Noise damping	Filter noise damping
355	245	295
400	325	585

Foot recess dimensions, refer to Page 5/5.

Dimension drawing legend for all types of construction

① Center of the air intake opening
③ Hoisting recesses
⑤ Air intake from all 4 sides for the filter version
⑥ Air intake for the version without filter

													DE shaft end							**NDE** shaft end						
p_2 –	p_8 –	p_9 –	p_{10} –	s K	v –	w_1 C	w_2 –	w_5 –	w_6 –	x_1 –	x_3 –	y –	**d** **D**	l E	**t** **GA**	**u** **F**	d_6 –	d_{10} –	Undercut E DIN 509 –	**d_1** **DA**	l_1 EA	**t_1** **GC**	**u_1** **FA**	d_7 –	d_{11} –	Undercut E DIN 509
1240[2])	342	352	530	28	190	254	387	195	888 988	550 650	352	455	**110**	210	**116**	**28**	M24	120	2.5 x 0.4	**100**	210	**106**	**28**	M24	110	2.5 x 0.4
1445	387	397	605	35	235	280	403	208	943 1043 1143	575 675 775	352	500	**130**	250	**137**	**32**	M24	140	4 x 0.5	**120**	210	**127**	**32**	M24	130	2.5 x 0.4

Types of construction IM B35, IM V15 and IM V36

For Motor Type	Dimension designations according to Mounting flange acc. to DIN 42 948									
	DIN IEC	**Size**	a_1 p	**b_1** **N**	c_1 LA	**e_1** **M**	f_1 T	i_2 –	s_2 S	z –
1GG5 352 **1GG5 354**		**A 800**	800	**680**	25	**740**	6	210	24	8
1GG5 402 **1GG5 404** **1GG5 406**		**A 800**	800	**680**	25	**740**	6	250	24	8

Types of construction IM B35, IM V15 and IM V36

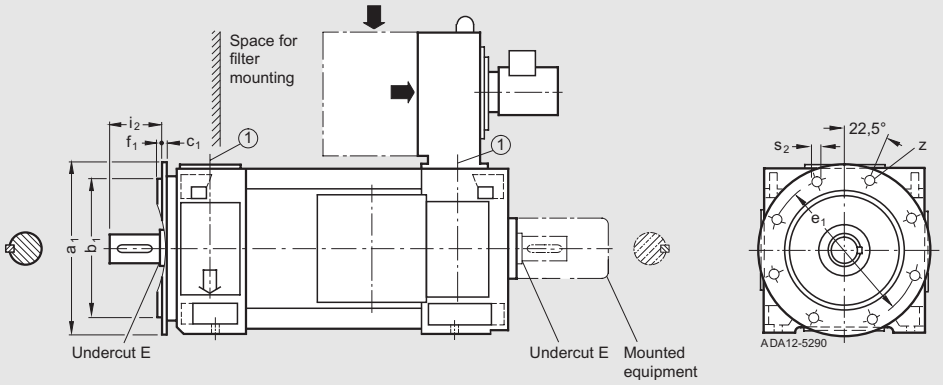

1) For the filter-silencer version, g_4 is 620 mm.
2) For the filter-silencer version, p_2 is 1300 mm.

Open, ventilated DC motors
1GH5 352 to 1GH5 406

All types of construction

For Motor Frame size	Type	Dimension designations according to DIN / IEC	a / B	b / A	c / HA	e / BB	f / AB	g_2 / LD	g_7 / –	g_8 / –	h / H	k / L	k_1 / LC	m / BA	m_1 / –	m_2 / –	n / AA	p / HD	p_1 / –	p_8 / –	p_9 / –	ö / –	$ö_1$ / –	$ö_2$ / –	$ö_3$ / –	$ö_4$ / –
355	**1GH5 352**		**770**	**610**	26	1090	705	550	915	730	**355**	1620	1831	220	220	160	110	720	905	342	352	230	370	210	350	180
	1GH5 354		**870**			1190						1720	1931													
400	**1GH5 402**		**800**	**686**	30	1170	795	595	1005	820	**400**	1740	1943	250	250	185	110	810	995	387	397	265	460	245	440	215
	1GH5 404		**900**			1270						1840	2043													
	1GH5 406		**1000**			1370						1940	2143													

Tachometer mounting

(valid for all types of construction)

For Motor Type	Dimension k_4 when using the tachometer/pulse encoder: 1GU1 051 GTB 9.06L	TDP 0,09LT POG 9D/10D	REO 444R	GMP 1,0L KPG 503	KPG 506	TDP 1,2+ TDP 1,2
1GH5 352	1685	1775	1800	1860	1895	1970
1GH5 354	1785	1875	1900	1960	1995	2070
1GH5 402	1805	1895	1920	1980	2015	2090
1GH5 404	1905	1995	2020	2080	2115	2190
1GH5 406	2005	2095	2120	2180	2215	2290

Type of construction IM B3

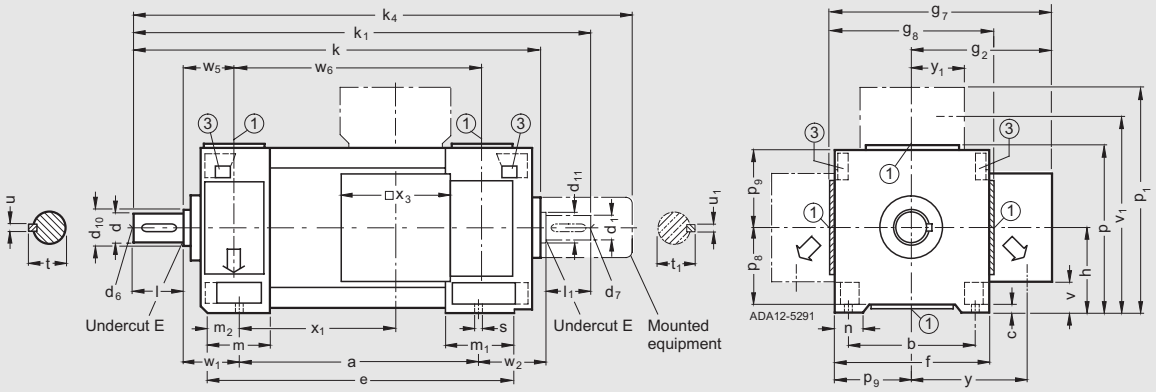

Flange for air intake or air discharge

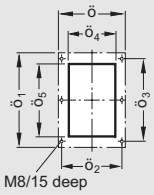

Dimension drawing legend for all types of construction

① Center of the air intake opening

③ Hoisting recesses

												DE shaft end						Undercut E	**NDE** shaft end						Undercut E
$\ddot{o}_5$ –	s K	v –	v_1 –	w_1 C	w_2 –	w_5 –	w_6 –	x_1 –	x_3 –	y –	y_1 –	**d D**	l E	**t GA**	**u F**	d_6 –	d_{10} –	DIN 509 –	**d_1 DA**	l_1 EA	**t_1 GC**	**u_1 FA**	d_7 –	d_{11} –	DIN 509
340	28	190	810	254	387	195	888 988	550 650	352	455	165	**110**	210	**116**	**28**	M24	120	2.5 x 0.4	**100**	210	**106**	**28**	M24	110	2.5 x 0.4
430	35	235	900	280	403	208	943 1043 1143	575 675 775	352	500	165	**130**	250	**137**	**32**	M24	140	4 x 0.5	**120**	210	**127**	**32**	M24	130	2.5 x 0.4

Foot recesses

For Motor Frame size	Type	m BA	m_1 –	m_2[1]) –	m_3 –	m_4 –	m_5 –	m_6 –	m_7 –	m_8 –
355	**1GH5 352** **1GH5 354**	220	220	M24 x 70	34	34	89	195	279	83
400	**1GH5 402** **1GH5 404** **1GH5 406**	250	250	M30 x 80	39	39	103	226	279	96

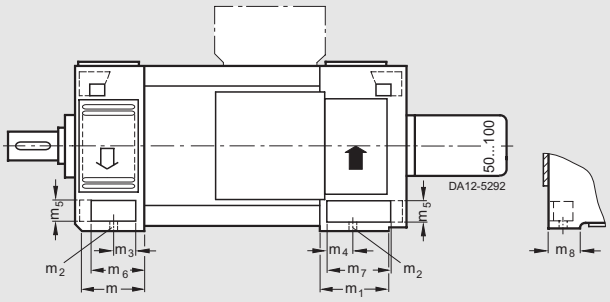

Types of construction IM B35, IM V15 and IM V36

For Motor Type	Dimension designations according to DIN IEC	Size	a_1 p	**b_1 N**	c_1 LA	**e_1 M**	f_1 T	i_2 –	s_2 S	z –
		Mounting flange acc. to DIN 42 948								
1GH5 352 **1GH5 354**		**A 800**	800	**680**	25	**740**	6	210	24	8
1GH5 402 **1GH5 404** **1GH5 406**		**A 800**	800	**680**	25	**740**	6	250	24	8

Types of construction IM B35, IM V15 and IM V36

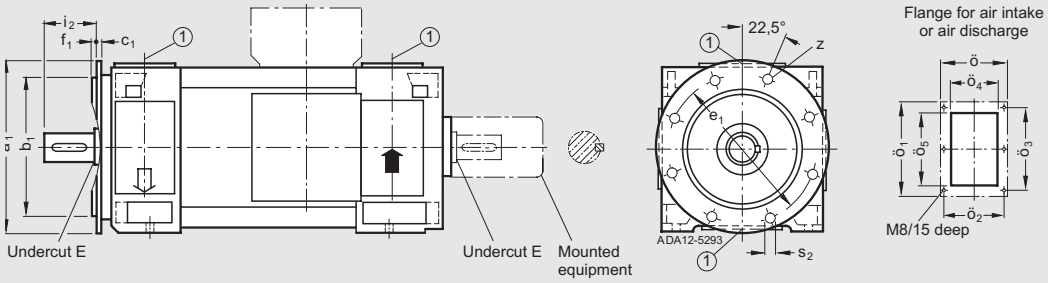

Open, ventilated DC motors 1GG5 500 to 1GG5 635

Types of construction IM B3

For Motor			Dimension designations according to																
Frame size	Type	Terminal box type	**DIN IEC**	**a B**	**b A**	c HA	e BB	f AB	g_1 –	g_2 –	g_3 –	g_4 –	**h H**	k L	k_3 –	k_6 –	k_7 –	k_8 –	k_9 –
500	**1GG5 500**	1XB7 710 1XB7 942		**1210**	**850**	30	1455	1072	1420 1560	770 910	1300	940	**500**	2115	425	280	1000	905	185
	1GG5 501	1XB7 710 1XB7 942		**1210**	**850**	30	1455	1072	1420 1560	770 910	1300	940	**500**	2115	425	280	1000	905	185
	1GG5 502	1XB7 710 1XB7 942		**1210**	**850**	30	1455	1072	1420 1560	770 910	1300	940	**500**	2115	425	280	1000	905	185
	1GG5 503	1XB7 710 1XB7 942		**1410**	**850**	30	1655	1072	1420 1560	770 910	1300	940	**500**	2365	425	280	1000	905	185
	1GG5 504	1XB7 710 1XB7 942		**1410**	**850**	30	1655	1072	1420 1560	770 910	1300	940	**500**	2365	425	280	1000	905	185
630	**1GG5 631**	1XB7 710 1XB7 942		**1280**	**1060**	34	1565	1354	1730 1870	910 1050	1640	1255	**630**	2270	425	330	1070	960	220
	1GG5 632	1XB7 710 1XB7 942		**1280**	**1060**	34	1565	1354	1730 1870	910 1050	1640	1255	**630**	2270	425	330	1070	960	220
	1GG5 633	1XB7 710 1XB7 942		**1480**	**1060**	34	1765	1354	1730 1870	910 1050	1640	1255	**630**	2520	425	330	1070	960	220
	1GG5 634	1XB7 710 1XB7 942		**1480**	**1060**	34	1765	1354	1730 1870	910 1050	1640	1255	**630**	2520	425	330	1070	960	220
	1GG5 635	1XB7 710 1XB7 942		**1630**	**1060**	34	1915	1354	1730 1870	910 1050	1640	1255	**630**	2670	425	330	1070	960	220

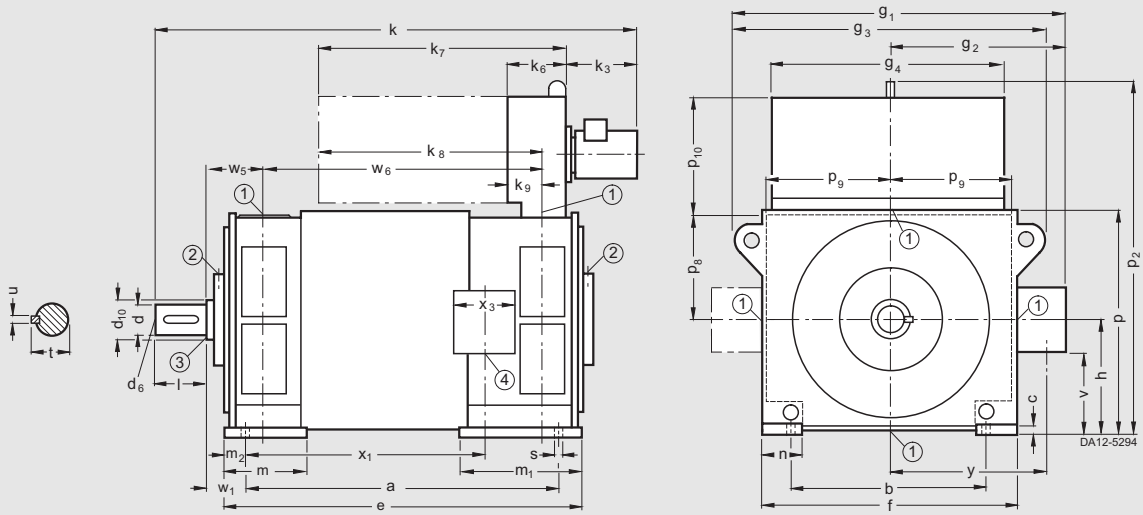

① Center air intake opening
② Lubrication nipple
③ Undercut according to DIN 509
④ Center terminal box

																	DE shaft end					
m BA	m_1 –	m_2 –	n AA	p –	p_2 –	p_8 –	p_9 –	p_{10} –	s K	v –	w_1 C	w_5 –	w_6 –	x_1 –	x_3 –	y –	**d** **D**	l E	**t** **GA**	**u** **F**	d_6 –	d_{10} –
560	635	125	170	1000	1680	485	526	645	35	335 285	200	255	1090	835 800	352 480	670 755	**140**	250	**148**	**36**	M30	150
460	635	125	170	1000	1680	485	526	645	35	335 285	200	255	1090	835 800	352 480	670 755	**140**	250	**148**	**36**	M30	150
360	635	125	170	1000	1680	485	526	645	35	335 285	200	255	1090	835 800	352 480	670 755	**150**	250	**158**	**36**	M30	160
460	635	125	170	1000	1680	485	526	645	35	335 285	200	255	1290	1035 1000	352 480	670 755	**160**	300	**169**	**40**	M30	170
360	635	125	170	1000	1680	485	526	645	35	335 285	200	255	1290	1035 1000	352 480	670 755	**160**	300	**169**	**40**	M30	170
515	700	145	210	1260	1940	615	667	645	42	465 415	224	286	1150	885 850	352 480	810 895	**160**	300	**169**	**40**	M30	170
415	700	145	210	1260	1940	615	667	645	42	465 415	224	286	1150	885 850	352 480	810 895	**170**	300	**179**	**40**	M30	180
515	700	145	210	1260	1940	615	667	645	42	465 415	224	286	1350	1085 1050	352 480	810 895	**190**	350	**200**	**45**	M30	200
415	700	145	210	1260	1940	615	667	645	42	465 415	224	286	1350	1085 1050	352 480	810 895	**190**	350	**200**	**45**	M30	200
415	700	145	210	1260	1940	615	667	645	42	465 415	224	286	1500	1235 1200	352 480	810 895	**200**	350	**210**	**45**	M30	220

Open, ventilated DC motors
1GH5 500 to 1GH5 635

Types of construction IM B3

For Motor			Dimension designations according to																
Frame size	Type	Terminal box type	**DIN IEC**	**a B**	**b A**	c HA	e BB	f AB	g_1 –	g_2 –	g_3 –	**h H**	k L	m BA	m_1 –	m_2 –	n AA	ö –	$ö_1$ –
500	**1GH5 500**	1XB7 710 1XB7 942		**1210**	**850**	30	1455	1072	1420 1560	770 910	1300	**500**	1850	560	635	125	170	230	620
	1GH5 501	1XB7 710 1XB7 942		**1210**	**850**	30	1455	1072	1420 1560	770 910	1300	**500**	1850	460	635	125	170	230	620
	1GH5 502	1XB7 710 1XB7 942		**1210**	**850**	30	1455	1072	1420 1560	770 910	1300	**500**	1850	360	635	125	170	230	620
	1GH5 503	1XB7 710 1XB7 942		**1410**	**850**	30	1655	1072	1420 1560	770 910	1300	**500**	2100	460	635	125	170	230	620
	1GH5 504	1XB7 710 1XB7 942		**1410**	**850**	30	1655	1072	1420 1560	770 910	1300	**500**	2100	360	635	125	170	230	620
630	**1GH5 631**	1XB7 710 1XB7 942		**1280**	**1060**	34	1565	1354	1730 1870	910 1050	1640	**630**	2010	515	700	145	210	265	840
	1GH5 632	1XB7 710 1XB7 942		**1280**	**1060**	34	1565	1354	1730 1870	910 1050	1640	**630**	2010	415	700	145	210	265	840
	1GH5 633	1XB7 710 1XB7 942		**1480**	**1060**	34	1765	1354	1730 1870	910 1050	1640	**630**	2260	515	700	145	210	265	840
	1GH5 634	1XB7 710 1XB7 942		**1480**	**1060**	34	1765	1354	1730 1870	910 1050	1640	**630**	2260	415	700	145	210	265	840
	1GH5 635	1XB7 710 1XB7 942		**1630**	**1060**	34	1915	1354	1730 1870	910 1050	1640	**630**	2410	415	700	145	210	265	840

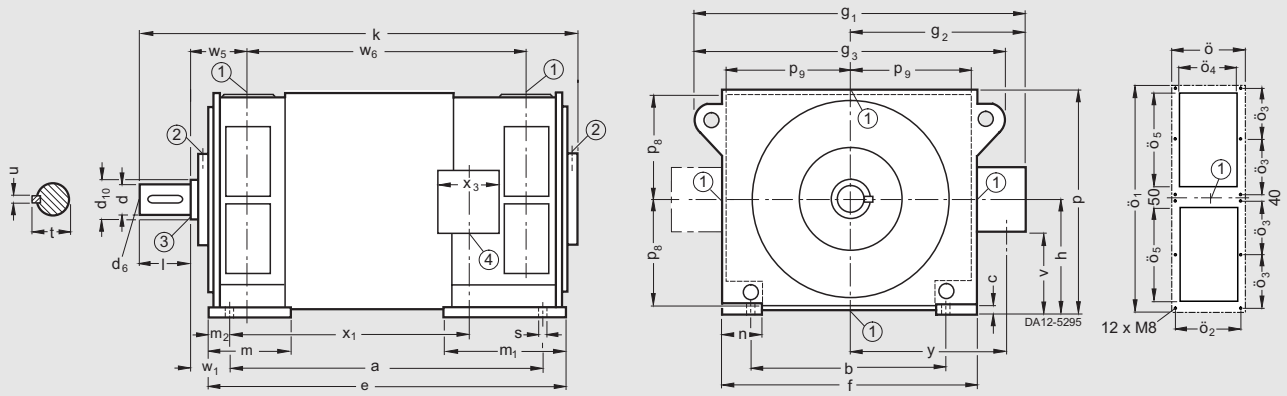

① Center of the air intake opening
② Lubrication nipple
③ Undercut according to DIN 509
④ Center terminal box

															DE shaft end					
$ö_2$ –	$ö_3$ –	$ö_4$ –	$ö_5$ –	p –	p_8 –	p_9 –	s K	v –	w_1 C	w_5 –	w_6 –	x_1 –	x_3 –	y –	**d D**	l E	**t GA**	**u F**	d_6 –	d_{10} –
210	140	180	270	1000	485	526	35	335 285	200	255	1090	835 800	352 480	670 755	**140**	250	**148**	**36**	M30	150
210	140	180	270	1000	485	526	35	335 285	200	255	1090	835 800	352 480	670 755	**140**	250	**148**	**36**	M30	150
210	140	180	270	1000	485	526	35	335 285	200	255	1090	835 800	352 480	670 755	**150**	250	**158**	**36**	M30	160
210	140	180	270	1000	485	526	35	335 285	200	255	1290	1035 1000	352 480	670 755	**160**	300	**169**	**40**	M30	170
210	140	180	270	1000	485	526	35	335 285	200	255	1290	1035 1000	352 480	670 755	**160**	300	**169**	**40**	M30	170
245	195	215	380	1260	615	667	42	465 415	224	286	1150	885 850	352 480	810 895	**160**	300	**169**	**40**	M30	170
245	195	215	380	1260	615	667	42	465 415	224	286	1150	885 850	352 480	810 895	**170**	300	**179**	**40**	M30	180
245	195	215	380	1260	615	667	42	465 415	224	286	1350	1085 1050	352 480	810 895	**190**	350	**200**	**45**	M30	200
245	195	215	380	1260	615	667	42	465 415	224	286	1350	1085 1050	352 480	810 895	**190**	350	**200**	**45**	M30	200
245	195	215	380	1260	615	667	42	465 415	224	286	1500	1235 1200	352 480	810 895	**200**	350	**210**	**45**	M30	220

Dimension Drawings

T.E.F.C. DC motors
1HS5 352 to 1HS5 406

Types of construction IM B3 and IM B35

For Motor		Dimension designations according to																					
Frame size	Type	**DIN IEC**	**a B**	**b A**	c HA	e BB	f AB	g_1 –	g_2 AD	g_4 –	g_5 –	g_6 –	g_7 –	g_8 –	**h H**	k L	k_1 LC	k_5 –	k_6 –	m BA	m_1 –	m_2 –	n AA	o_1 –	p_2 –
355	**1HS5 352**		**770**	**610**	26	1090	705	930	550	592	760	980	915	730	**355**	1730	1831	260	1120	220	220	160	110	40	1350
	1HS5 354		**870**			1190										1830	1931		1220						
400	**1HS5 402**		**800**	**686**	30	1170	795	1140	595	570	795	1060	1005	820	**400**	1940	1943	340	1175	250	250	185	110	40	1430
	1HS5 404		**900**			1270										2040	2043		1275						
	1HS5 406		**1000**			1370										2140	2143		1375						

Type of construction IM B3

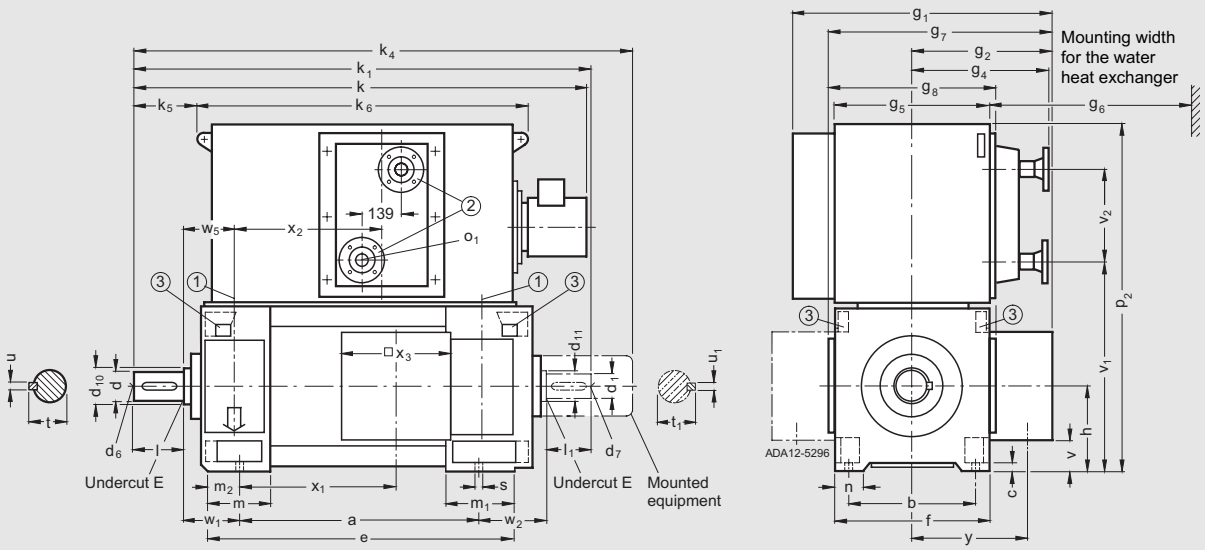

① Center of the air intake opening
② Nominal width of the cooling water connection acc. to DIN 2633
③ Hoisting recesses

Connection dimensions of the cooling water flange

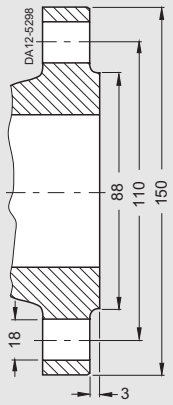

											DE shaft end							**NDE** shaft end						
s K	v –	v_1 –	v_2 –	w_1 C	w_2 CA	w_5 –	x_1 –	x_2 –	x_3 –	y –	**d** **D**	l E	**t** **GA**	**u** **F**	d_6 –	d_{10} –	Undercut E DIN 509 –	**d_1** **DA**	l_1 EA	**t_1** **GC**	**u_1** **FA**	d_7 –	d_{11} –	Undercut E DIN 509 –
28	190	869	320	254	387	195	550 650	454 554	352	455	**110**	210	**116**	**28**	M24	120	2.5 x 0.4	**100**	210	**106**	**28**	M24	110	2.5 x 0.4
35	235	928	320	280	403	208	575 675 775	426 526 626	352	500	**130**	250	**137**	**32**	M24	140	4 x 0.5	**120**	210	**127**	**32**	M24	130	2.5 x 0.4

Type of construction IM B35

For Motor Type	Dimension designations according to Mounting flange acc. to DIN 42948									
	DIN IEC	**Size**	a_1 p	**b_1** **N**	c_1 LA	**e_1** **M**	f_1 T	i_2 –	s_2 S	z –
1HS5 352 **1HS5 354**		**A 800**	800	**680**	25	**740**	6	210	24	8
1HS5 402 **1HS5 404** **1HS5 406**		**A 800**	800	**680**	25	**740**	6	250	24	8

Tachometer mounting (valid for all types of construction)

For Motor Type	Dimension k_4 when using the tachometer/pulse encoder					
	1GU1 051 GTB 9.06L	TDP 0,09LT POG 9D/10D	REO 444R	GMP 1,0L KPG 503	KPG 506	TDP 1,2+ TDP 1,2
1HS5 352	1685	1775	1800	1860	1895	1970
1HS5 354	1785	1875	1900	1960	1995	2070
1HS5 402	1805	1895	1920	1980	2015	2090
1HS5 404	1905	1995	2020	2080	2115	2190
1HS5 406	2005	2095	2120	2180	2215	2290

Type of construction IM B35

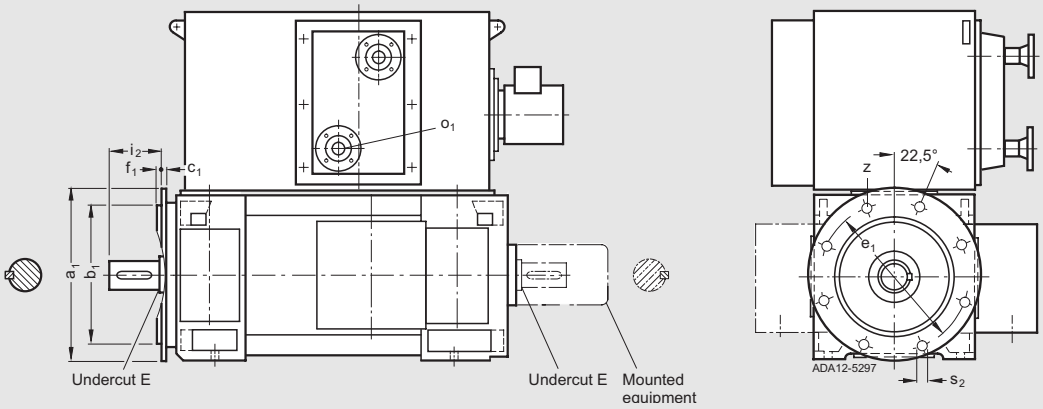

T.E.F.C. DC motors
1HS5 500 to 1HS5 635

Type of construction IM B3

For Motor			Dimension designations according to																
Frame size	Type	Terminal box type	**DIN IEC**	**a B**	**b A**	c HA	e BB	f AB	g_1 –	g_2 –	g_3 –	g_4 –	g_5 –	g_6 –	**h H**	k L	k_5 –	k_6 –	m BA
500	**1HS5 500**	1XB7 710 1XB7 942		**1210**	**850**	30	1455	1072	1420 1560	770 910	1300	666	1020	1250	**500**	2115	324	1366	560
	1HS5 501	1XB7 710 1XB7 942		**1210**	**850**	30	1455	1072	1420 1560	770 910	1300	666	1020	1250	**500**	2115	324	1366	460
	1HS5 502	1XB7 710 1XB7 942		**1210**	**850**	30	1455	1072	1420 1560	770 910	1300	666	1020	1250	**500**	2115	324	1366	360
	1HS5 503	1XB7 710 1XB7 942		**1410**	**850**	30	1655	1072	1420 1560	770 910	1300	666	1020	1250	**500**	2365	374	1566	460
	1HS5 504	1XB7 710 1XB7 942		**1410**	**850**	30	1655	1072	1420 1560	770 910	1300	666	1020	1250	**500**	2365	374	1566	360
630	**1HS5 631**	1XB7 710 1XB7 942		**1280**	**1060**	34	1565	1354	1730 1870	910 1050	1640	796	1280	1470	**630**	2270	388	1458	515
	1HS5 632	1XB7 710 1XB7 942		**1280**	**1060**	34	1565	1354	1730 1870	910 1050	1640	796	1280	1470	**630**	2270	388	1458	415
	1HS5 633	1XB7 710 1XB7 942		**1480**	**1060**	34	1765	1354	1730 1870	910 1050	1640	796	1280	1470	**630**	2520	438	1658	515
	1HS5 634	1XB7 710 1XB7 942		**1480**	**1060**	34	1765	1354	1730 1870	910 1050	1640	796	1280	1470	**630**	2520	438	1658	415
	1HS5 635	1XB7 710 1XB7 942		**1630**	**1060**	34	1915	1354	1730 1870	910 1050	1640	796	1280	1470	**630**	2670	438	1808	415

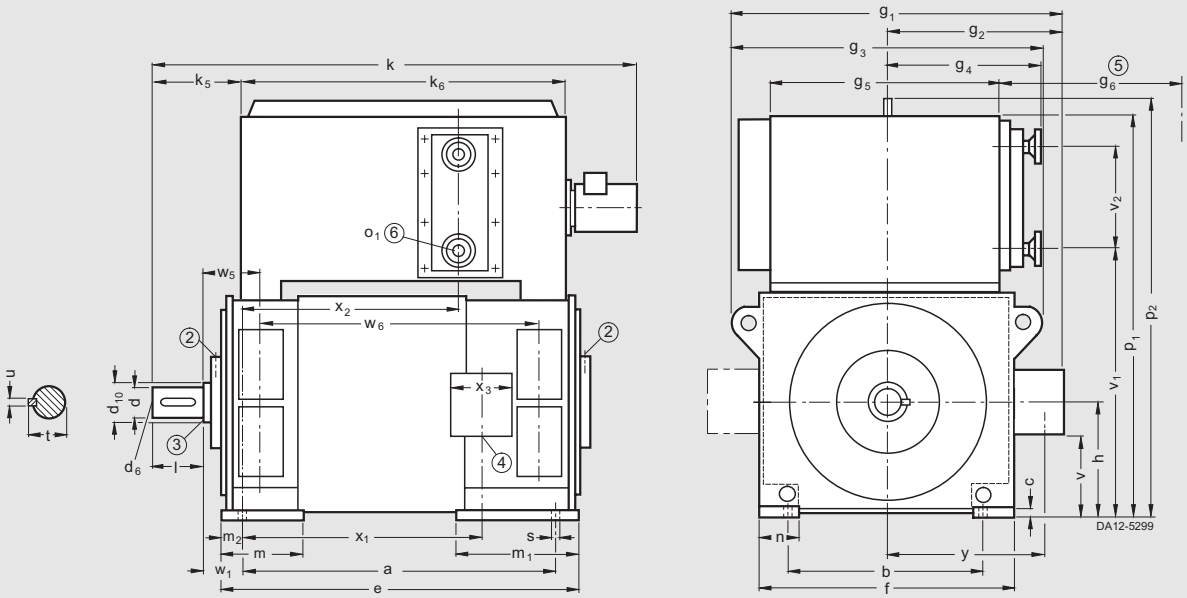

② Lubricating nipple
③ Undercut acc. to DIN 509
④ Center of terminal box
⑤ Dimensions for water heat exchanger mounting
⑥ Nominal width of the cooling water connection according to DIN 2533

															DE shaft end					
m_1 –	m_2 –	n AA	o_1 –	p_1 –	p_2 –	s K	v –	v_1 –	v_2 –	w_1 C	x_1 –	x_2 –	x_3 –	y –	**d** **D**	l E	**t** **GA**	**u** **F**	d_6 –	d_{10} –
635	125	170	50	1850	1910	35	335 285	1247	440	200	835 800	802	352 480	670 755	**140**	250	**148**	**36**	M30	150
635	125	170	50	1850	1910	35	335 285	1247	440	200	835 800	802	352 480	670 755	**140**	250	**148**	**36**	M30	150
635	125	170	50	1850	1910	35	335 285	1247	440	200	835 800	802	352 480	670 755	**150**	250	**158**	**36**	M30	160
635	125	170	50	1850	1910	35	335 285	1247	440	200	1035 1000	915	352 480	670 755	**160**	300	**169**	**40**	M30	170
635	125	170	50	1850	1910	35	335 285	1247	440	200	1035 1000	915	352 480	670 755	**160**	300	**169**	**40**	M30	170
700	145	210	65	2204	2264	42	465 415	1505	540	224	885 850	837	352 480	810 895	**160**	300	**169**	**40**	M30	170
700	145	210	65	2204	2264	42	465 415	1505	540	224	885 850	837	352 480	810 895	**170**	300	**179**	**40**	M30	180
700	145	210	65	2204	2264	42	465 415	1505	540	224	1085 1050	962	352 480	810 895	**190**	350	**200**	**45**	M30	200
700	145	210	65	2204	2264	42	465 415	1505	540	224	1085 1050	962	352 480	810 895	**190**	350	**200**	**45**	M30	200
700	145	210	65	2204	2264	42	465 415	1505	540	224	1235 1200	1112	352 480	810 895	**200**	350	**210**	**45**	M30	220

6RA70 drive converters

Rated DC currents 400 A and 600 A

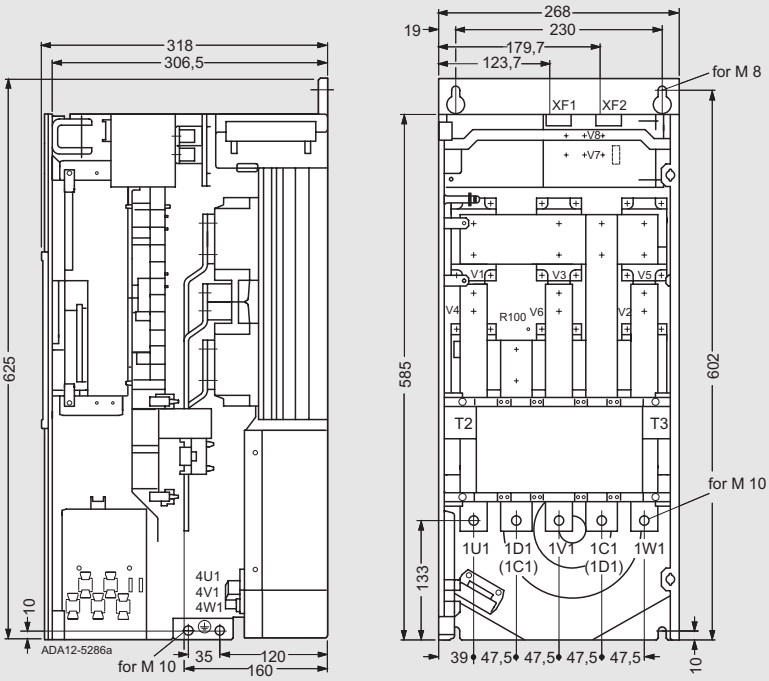

Rated DC currents 800 A and 850 A

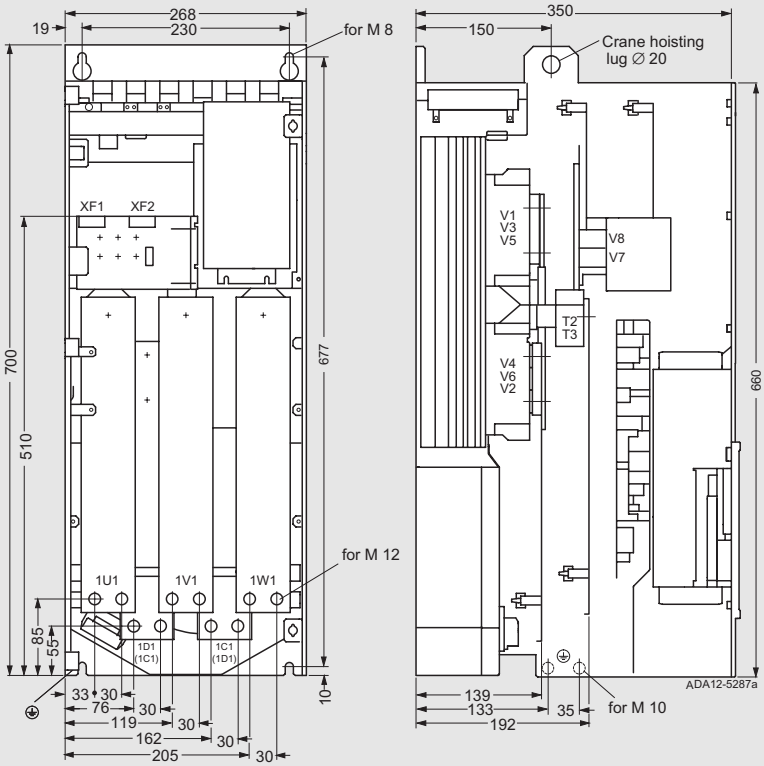

Rated DC currents 900 A to 1200 A

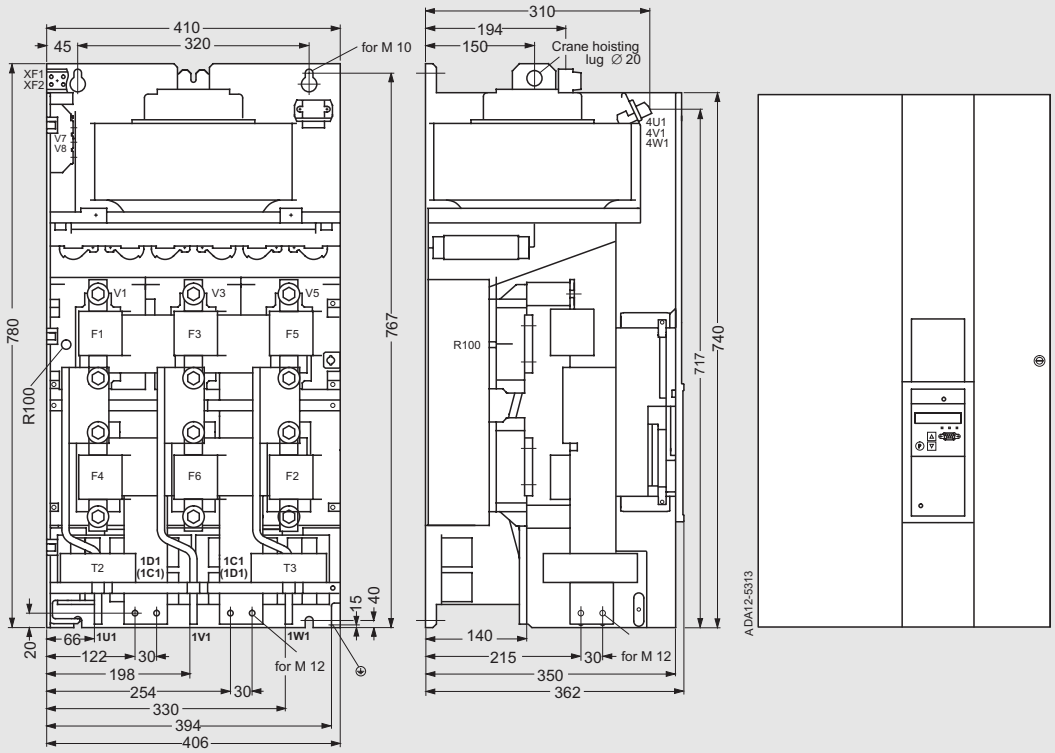

6RA70 drive converters

Rated DC currents 1500 A to 2000 A

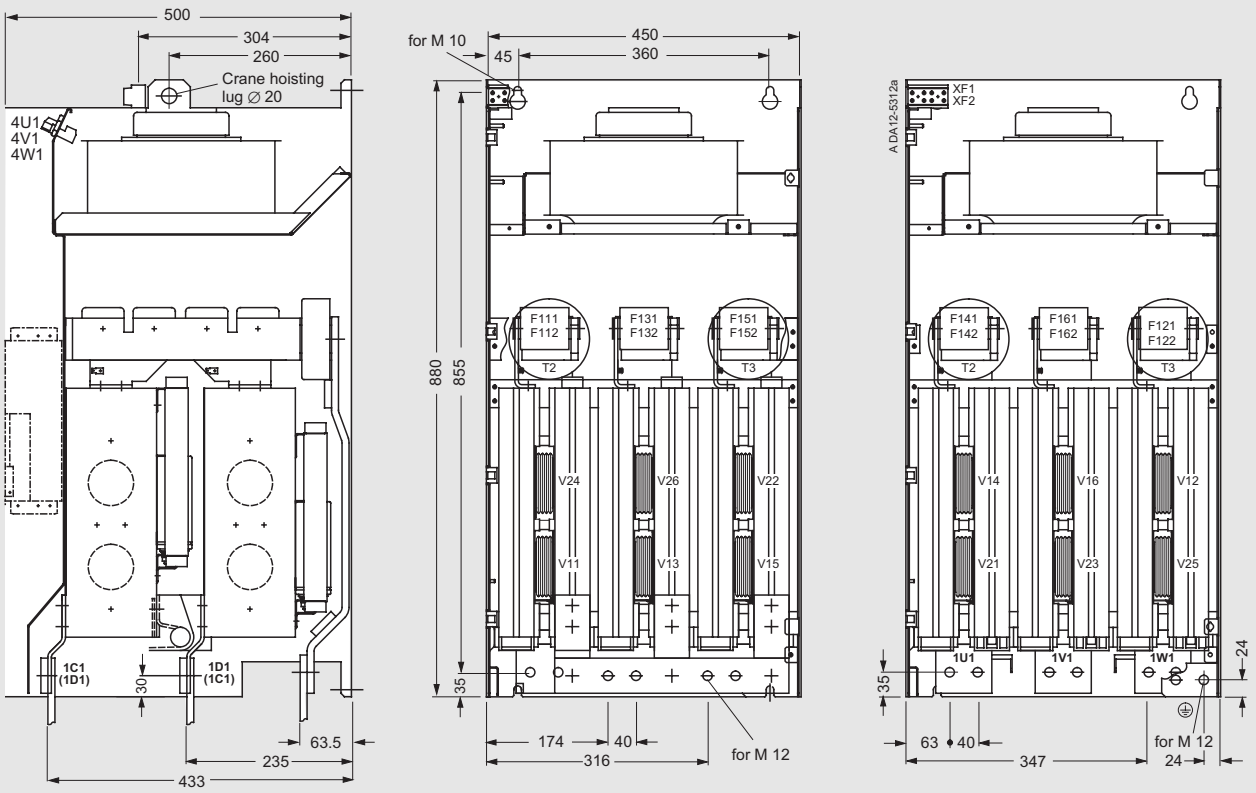

5

DC Drives
Appendix

A/2	ISO 9001 Certificate
A/2	Environment, Resources and Recycling
A/3	EC Manufacturer's Declaration EC Declaration of Conformance
A/4	Siemens Companies and Representatives in Europe
A/5	Siemens Companies and Representatives Worldwide
A/7	Year 2000 Compliance
A/8	Conditions of Sale and Delivery

A

ISO 9001 Certificate

Environment, Resources and Recycling

A

Siemens AG has committed itself to protecting the environment and conserving valuable natural resources. This applies both to production and to the products we sell.

As early as the development phase, the possible impact of future products and systems on the environment is taken into consideration. Our aim is to prevent environmental pollution or, at least, reduce it to a minimum and, in doing so, look beyond existing regulations and legislation.

Below are some of the most important environment-related aspects which are taken into account:

The use of dangerous substances (such as arsenic, asbestos, beryllium, cadmium, CFC, halogens and many more) is avoided as early as the development phase.

Connections have been designed so that they are easy to service and materials are selected carefully with preference being given to those which can be recycled or disposed of without problem.

Materials for manufacturing purposes are identified in accordance with their recyclability. This applies, in particular, to components which contain unavoidable, hazardous materials. These components are installed or mounted in such a way that they can be easily separated, thus facilitating disposal in an environmentally-friendly manner. Wherever possible, recycled components are used.

Environmentally-compatible packaging materials (pressed board and PE foils) are used for shipping and storage. We also try to keep the amount of packaging material used to a minimum.

If possible we pack our products in reusable packaging.

We have already made preparations to enable the converters to be disposed of after use in accordance with the regulations governing the disposal of electronic equipment (not yet in force).

This catalog is printed on chlorine-free bleached paper.

EC Manufacturer's Declaration
EC Declaration of Conformance

SIEMENS

EG-Herstellererklärung

No. A1A 2741 K002 DE / 05.99

Hersteller:

Siemens Aktiengesellschaft
Bereich Automatisierungs- und Antriebstechnik
Geschäftsgebiet Large Drives
Segment Mittelspannungsmaschinen

Anschrift:

Vogelweiherstraße 1 - 15
90441 Nürnberg
Bundesrepublik Deutschland

Produktbezeichnung:

Gleichstromnaschinen Reihe 1G.5... und 1H.5...
Achshöhe 35. bis 63.

Das bezeichnete Produkt ist ausschließlich zum Einbau in eine andere Maschine bestimmt. Die Inbetriebnahme ist solange untersagt, bis die Konformität des Endproduktes mit der Richtlinie 89/392/EG hergestellt ist.

Wir bestätigen die Konformität der oben bezeichneten Produkte mit den Normen:

EN 60034-5
EN 60034-6
EN 60034-9
EN 60204-1, Abschn. 19

DIN VDE 0530-1

Siemens Aktiengesellschaft

Nürnberg, den ...

A&D LD 04 Heinz Kolb
Leiter Segment Mittelspannungsmaschinen

A&D LD 04 KL Michael Vierlicher
Kaufm. Leiter Segment Mittelspannungsmaschinen

Diese Erklärung ist keine Zusicherung von Eigenschaften im Sinne der Produkthaftung.
Die Sicherheitshinweise der Produktdokumentation sind zu beachten.

SIEMENS

EG-Konformitätserklärung

No. A1A 2741 K002 DE / 05.99

Hersteller:

Siemens Aktiengesellschaft
Bereich Automatisierungs- und Antriebstechnik
Geschäftsgebiet Large Drives
Segment Mittelspannungsmaschinen

Anschrift:

Vogelweiherstraße 1 - 15
90441 Nürnberg
Bundesrepublik Deutschland

Produktbezeichnung:

Gleichstromnaschinen Reihe 1G.5... und 1H.5...
Achshöhe 35. bis 63.

Das bezeichnete Produkt stimmt mit den Vorschriften folgender Europäischer Richtlinie überein:

Richtlinie 73/23/EWG — Richtlinie des Rates zur Rechtsangleichung der Rechtsvorschriften der Mitgliedstaaten betreffend elektrischer Betriebsmittel zur Verwendung innerhalb bestimmter Spannungsgrenzen geändert durch RL 93/68/EWG des Rates

Die Übereinstimmung mit den Vorschriften dieser Richtlinie wird nachgewiesen durch die Einhaltung folgender Normen:

Harmonisierte Europäische Normen:

EN 60 034-1
EN 60 034-5
EN 60 034-6
EN 60 034-9
EN 60 204-1

Sicherheitshinweise und Betriebsanleitungen sind zusätzlich zu beachten.

Erstmalige Anbringung der CE-Kennzeichnung: 1996

Siemens Aktiengesellschaft

Nürnberg, den ...

A&D LD 04 Heinz Kolb
Leiter Segment Mittelspannungsmaschinen

A&D LD 04 KL Michael Vierlicher
Kaufm. Leiter Segment Mittelspannungsmaschinen

Diese Erklärung bestätigt die Übereinstimmung mit den genannten Richtlinien, ist jedoch keine Zusicherung von Eigenschaften im Sinne der Produkthaftung.

SIEMENS

EG-Herstellererklärung

(nach Art. 4 Abs. 2 der EG-Richtlinie 89/392/EWG)

Hersteller:

C98130-A1258-A1-01-K8

Siemens Aktiengesellschaft Österreich
Bereich Elektroniksystem Wien A&D

Anschrift:

Postfach 83
A-1211 Wien

Siemensstraße 88-92
A-1210 Wien

Produktbezeichnung:

SIMOREG DC-MASTER
Stromrichtergerät mit Stromgrenzwerten
6RA70 ...-4.....
6RA70 ...-6.....

Das bezeichnete Produkt ist ausschließlich zum Einbau in eine andere Maschine bestimmt. Die Inbetriebnahme ist solange untersagt, bis die Konformität des Endproduktes mit der Richtlinie 89/392/EWG des Rates, hergestellt ist.

Wir bestätigen die Konformität des oben bezeichneten Produktes mit den Normen:

EN 60204-1 (DIN EN 60204 Teil 1 / VDE 0113 Teil 1)

VDE 0160 / pr EN 50178
VDE 0558 Teil 1

Wien, den 13.05.1998

Siemens Aktiengesellschaft Österreich

Dr. Rudolf Ehrenhöfer
Geschäftsführer Technik

Diese Erklärung erfüllt keine Zusicherung von Eigenschaften im Sinne der Produkthaftung.
Die Sicherheitshinweise der mitgelieferten Produktdokumentation sind zu beachten.

A

Siemens Companies and Representatives in Europe

Albania
BINDI sh. p. k.
Tirana

Armenia
Representative of Siemens AG
Yerevan

Austria
Siemens AG Österreich
Wien
Bregenz
Deutschlandsberg
Eisenstadt
Graz
Innsbruck
Klagenfurt
Klosterneuburg
Linz
Salzburg
St. Pölten
Villach

Azerbaijan
Representative of SIMKO AS
Baku

Belgium
Siemens S. A.
Bruxelles
Antwerpen
Boussu
Colfontaine
Dilsen-Stokkem
Gent
Haasrode
Herentals
Huizingen
Liège
Namur
Oostkamp
Zaventem

Bulgaria
Siemens AG Representative in Bulgaria
Sofia

Commonwealth of Independent States (CIS)
Siemens GmbH Moskau
Moskau
Barnaul
Jakutsk
Jekaterinburg
Jrkutsk
Jshewsk
Kaluga
Krasnodar
Nowosibirsk
Perm
St. Petersburg
Tbilissi
Tjumen
Tomsk
Ufa
Wladiwostok

Croatia
Siemens d.d.
Zagreb

Cyprus
GEVO Ltd.
Nicosia

Czech Republic
Siemens s.r.o.
Praha
Brno
Děčín
Stříbro
Trutnov

Denmark
Siemens A/S
Ballerup
Alborg
Brønshøj
Esbjerg
Hedensted
Højbjerg
Odense
Skensved
Tåstrup
Vejle

Eire (Ireland)
Siemens Ltd.
Dublin

Estonia
AS Siemens
Tallinn

Finland
Siemens
Osakeyhtiö
Espoo
Helsinki

France
Siemens S. A. S.
Saint-Denis
Bihorel
Caluire-et-Cuire
Cesson Sévigné
Dijon
Haguenau
La Garenne Colombes
La-Suze-sur-Sarthe
Lesquin
Les Ulis
Lissess
Lormont
Marseille
Mérignac
Metz
Montrouge
Molsheim
Nanterre
Nantes
Nice
Pantin
Paris La Défense
Reims
Saint-Denis
Saint-Quentin
Strasbourg
Toulouse

Georgia
Representative of Siemens AG
Tbilisi

Great Britain
Siemens plc
Bracknell
Beeston
Belfast
Bellshill
Birmingham
Bristol
Camberley
Cambridge
Chessington
Christchurch
Clevedon
Corby
Congleton
Crawley
Cumbernauld
East Kilbridge
Fareham
Glasgow
Hemel Hempstead
Hounslow
Ilford
Isle of Wight
London
Luton
Manchester
Milton Keynes
Newcastle-upon-Tyne
Oldham
Oxford
Poole
Purley
Romsey
Telford
Wellingborough
Wembley

Greece
Siemens A. E.
Athen, Amaroussio
Acharnes
Thessaloniki
Vassiliko Evias

Hungary
Siemens Rt.
Budapest
Bicske
Cegled
Szombathely

Iceland
Smith & Nordland HF
Reykjavik

Italy
Siemens S. p. A.
Milano
Bari
Bologna
Brescia
Cagliari
Casoria
Cassina de Pecchi
Fanglia
Firenze
Genova
Napoli
Padova
Palermo
Pescara
Roma
Torino
Verona

Lativa
Siemens S/A
Riga

Lithuania
Lietuvos ELTIKA
Vilnius
Klaipeda

Luxemburg
Siemens S. A.
Luxembourg-Hamm

Macedonia
SITAI d.o.o.
Skopje

Malta
J.R.D. SYSTEMS Ltd.
Harun

Moldavia
Siemens s.r.l.
Chisinau

Netherlands
Siemens Nederland N. V.
Den Haag
Alphen a/d Rijn
Zoetermeer

Norway
Siemens A/S
Oslo
Fyllingsdalen
Trondheim

Poland
Siemens Sp.z.o.o.
Warszawa
Gdańsk-Wrzeszcz
Katowice
Kratów
Poznań
Wroclaw

Portugal
Siemens S. A.
Lissboa
Amadora
Albufeira
Carnaxide
Coimbra
Evora
Loures
Matosinhos Codex
Mem Martins
Seixal

Romania
Siemens birou de consultaţii tehnice
Bucureşti
Slatina

Slovak Republic
Siemens s.r.o.
Bratislava
Dolný Kubin
Horná Streda
Michalovce
Nitra
Nové Zámky
Trnava

Slowenia
Siemens d.o.o.
Ljubljana
Kranj
Maribor

Spain
Siemens S. A.
Bilbao
Cornellá de Llobregat
Gijoñ
La Coruña
Las Palmas de Gran Canaria
León
Málaga
Murcia
Palma de Mallorca
Santa Cruz de Tenerife
Sevilla
Tres Cantos (Madrid)
Valencia
Vallodolid
Vigo
Zaragoza

Sweden
Siemens AB
Upplands Väsby
Göteborg
Haninge
Jönköping
Kista
Malmö
Solna
Sundsvall

Switzerland
Siemens Schweiz AG
Zürich
Adliswil
Basel
Bioggio
Bronschhofen
Dietikon-Fahrweid
Fahrweid
Winterthur-Töss

Turkey
SIMKO Ticaret ve Sanayi A.S.
Findikli Istanbul
Adana
Alsancak-Izmir
Ayazag-Istanbul
Beşiktaş-Istanbul
Bursa
Cerkezköy-Tekikdag
Kartal-Istanbul
Kavaklidere-Ankara
Mecidiyeköy-Istanbul
Mudanya
Samsun

Ukraine
Representative of Siemens AG
Kiew
Charkiw
Odessa
Wischgorod

White Russia
Representative of Siemens AG
Minsk

Yugoslavia
Siemens d.o.o.
Beograd

Africa

Algeria
Siemens Bureau d'Alger
Hydra

Angola
Escritório de Representacão da Siemens em Angola
Luanda

Botswana
Siemens (Pty) Ltd.
Gaborone
Iwaneng

Congo
SOFAMATEL S.P.R.L.
Kinshasa

Côte d'Ivoire
Siemens AG
S.A.R.L.
Abidjan

Egypt
Siemens Limited
Cairo-Mohandessin
Smouha Alexandria

Centech
Cairo-Zamalek

Ethiopia
Siemens (Pvt)
Addis Ababa

Ghana
Impromex ACCRA
Accra

Guinea
André & Cie. S. A.
Lausanne

Kenia
Siemens Communications Ltd.
Nairobi

Lesotho
Range Telecommunication Systems (Pty) Ltd
Maseru

Libya
Siemens A. G. Branch Libya
Tripoli

Malawi
Ecolectric Ltd.
Blantyre

Mauritius
Ireland Blyth Ltd
Port Louis

Morocco
SETEL
Société Electrotechnique
et de Télécommunication S. A.
Casablanca

Mosambique
Siemens Limitada
Maputo

Namibia
Siemens (Pty.) Ltd.
Windhoek

Nigeria
Siemens Limited
Lagos
Abuja
Kaduna

Republic of South Africa
Siemens Ltd.
Halfway House
Centurion
Isando
Pretoria
Springs
Woodmead

Sudan
National Electrical
Commercial Co.
Khartoum

Swaziland
Siemens (Pty) Ltd
Matsapha

Tansania
Tanzania Electrical Services Ltd.
Dar-es-Salaam

Tunesia
Siemens Bureau de Liaison
Tunis

Zambia
Siemens (Z) Ltd.
Kitwe
Lusaka

Zimbabwe
Siemens (Pvt.) Ltd.
Harare
Alexandra Park

America

Argentina
Siemens S. A.
Buenos Aires
San Martin
Bahia Blanca
Córdoba
Las Heras
Mar del Plata
Rosario
Boulogne sur Mer

Bolivia
Sociedad Comercial é Industrial Hansa Ltda.
La Paz

Brazil
Siemens Ltda.
Sao Paulo
Belo Horizonte
Brasilia
Campinas
Curitiba
Florianópolis
Fortaleza
Fravatai
Jaboatao dos Guararapes
Jundiai
Manaus
Pôrto Alegre
Ribeirao Preto
Rio de Janeiro
Salto
Salvador
S. Bernado do Campo
Vila Sao Joao

Canada
Siemens Canada Limited
Mississanga
Ajax
Brampton
Burnaby
Calgary
Cambridge
Clatham
Dartmouth
Drummondville
Edmonton
Kanata
London
Moncton
Montreal
Mount Pearl
Ottawa
Pointe Claire
Saçkatoon
Sherbrooke
Tilbury
Vanier
Windsor
Winnipeg

Chile
Siemens S.A.
Santiago de Chile

Colombia
Siemens S. A.
Santafé de Bogotá
Barranquilla
Cali-Occidente
Medellin

Costa Rica
Siemens S. A.
San José

Cuba
EUMEDA
Representación Consultiva de Siemens Electromedicina
Ciudad de la Habana

Curaçao
SANTRACO N. V.
Willemstad

Dominican Republic
Electromédica S. A.
Santo Domingo

Ecuador
Siemens S. A.
Quito
Guayaquil

El Salvador
Siemens S. A.
San Salvador

Guatemala
Siemens S. A.
Ciudad de Guatemala

Honduras
Representaciones Electroindustriales S. de R.L.
San Pedro Sula
Tegucigalpa

Jamaica
Meditron Ltd.
Kingston

Martinique
Périé Medical
Fort-de-France

Mexico
Siemens S A de CV
México, D.F.
Aguascalientes
Apodaca
Chihuahua
Cd. Juárez
Culiacán
Gómez Palacio
Hermosillo
León
Mérida
Puebla
San Juan Cuautlancingo
Tijuana
Tlajomulco de Zuniga
Veracruz
Villa Corregidora

Nicaragua
Siemens S. A.
Managua

Panama
Siemens S. A.
Panama

Paraguay
Rieder & Cia. S. A. C. I.
Asunción

Peru
Siemens S. A.
Lima

Trinidad and Tobago
Biomedical Technologies Ltd.
St. Augustin

United States of America
Siemens Corporation
New York
Allentown
Alpharetta
Arlington
Atlanta
Auburn Hills
Boca Raton
Bridgewater
Brooklyn Park
Camarillo
Charlotte
Columbus
Concord
Cupertino
Danvers
Duluth
Fountain Inn
Gainsville
Hickory
Hoffman Estates
Issaguah
Iselin
Johnson City
Lake Oswego
Lima
Milwaukee
Newport News
Norcross
Oklahoma City
Palo Alto
Piscataway
Princeton
Richardson
Richland
Sacramento
Santa Clara
Santa Fe Springs
San Jose
Sunnyvale
Totawa
Washington
Wendell

Uruguay
Conatel S.A.
Montevido

Venezuela
Siemens S. A.
Caracas
Barcelona
Maracaibo
Perto Ordaz
Valencia

Siemens Companies and Representatives Worldwide

Asia

Bahrain
Siemens AG Service Center
Transitec Gulf
Manama

Bangladesh
Siemens Bangladesh Ltd.
Dhaka
Khulna

Brunei
AMS Technologies
Sdn Bhd
Negara
Brunei
Darussalam

India
Siemens Ltd.
Ahmedabad
Bangalore
Calcutta
Chandigarh
Chennai
Coimbatore
Gurgaon
Kaloor
Mumbai
Nashik
Navi Mumbai
New Dehli
Pune
Secunderabad
Vadodara

Indonesia
Representative Office Siemens AG
Jakarta
Batam
Cilegon
Surabaya

Iraq
Siemens AG
Baghdad

Iran
Siemens S.S.K.
Teheran

Israel
Siemens Ltd.
Tel Aviv
Holon
Herzeliya
Ramat Hakhaiyal

Japan
Siemens K. K.
Tokyo
Kobe
Fukuoka
Hiroshima
Ishikawa
Kanagawa
Nagoya
Osaka
Sapporo
Sendai
Yokohama

Jordan
Siemens AG
Jordan Branch
Shmeisani-Amman
Amman

Kazakhstan
Representative of Siemens AG
Almaty

Kirghizstan
Representative of Siemens AG
Bischkek

Korea (Republik)
Siemens Ltd.
Seoul
Changwon
Kyungki-Do

Kuwait
National & German Electrical and Electronic Services Co. (NGEECO)
Kuwait

Lebanon
Siemens AG Lebanon Branch
Beyrouth

Malaysia
Siemens Electrical Engineering Sdn. Bhd.
Petaling Jaya
Kuala Lumpur
Kajang

Myanmar
Siemens Ltd.
Yangon

Nepal
Amatya Enterprises (Pvt.) Ltd.
Kathmandu

Oman
Siemens AG
Muscat Branch
Ruwi
Muscat

Pakistan
Siemens Pakistan Engineering Co. Ltd.
Karachi
Faisalabad
Islamabad
Lahore
Peshawar
Quetta

People's Republic of China
Siemens Ltd., China
Beijing
Changchun
Chengdu
Chongqing
Chuzhou
Dalian
Fuqing
Fuzhou
Guangzhou
Hangzhou
Jilin
Jinan
Nanhai
Nanjing
Panyu
Rizhao
Shanghai
Shenyang
Shenzhen
Suzhou
Tianjin
Wuhan
Wuxi
Xi'an
Xiaogan City
Zibo

Philippines
Siemens Inc.
Makati City
Pasig City
Cebu
Davao City

Qatar
Arabian Construction Engineering Company
Doha

Saudi Arabia
Arabia Electric Ltd. (Equipement)
Jeddah
Al Khobar
Riyadh

Singapore
Siemens Advanced Engineering (Pte.) Ltd.
Singapore

Sri Lanka
Dimo Limited
Colombo

Syria
Siemens AG
Damascus Branch
Dasmascus

Taiwan
Siemens Ltd.
Taipei
Taichung
Kaohsiung
Taoyuan Hsien

Thailand
Siemens Limited
Bangkok
Rayong

Turkmenistan
Representative of Siemens AG
Aschgabad

Uzbekistan
Representative of Siemens AG
Taschkent

United Arab Emirates
Siemens Resident Engineers
Dubai
Abu Dhabi

Vietnam
Siemens AG Representation
Hanoi
Ho Chi Minh City

Yemen
Tihama Tractors & Engineering Co. Ltd.
Sanaa
Aden

Australia
Siemens Ltd.
Melbourne
Adelaide
Bayswater
Brisbane
Gladesville
Milton
Pennant Hills
Perth
Silverwater
St. Leonards
Sydney

New Zealand
Siemens (NZ) Limited
Auckland
Wellington

Year 2000 Compliance

The date change at the end of the millennium will not only affect DP systems but also products, systems and installations being used in the field of automation and drive technology.

Apart from the hardware and software components, the application programs which process the date will especially be affected by the changeover.

For our automation products and systems, we in the Siemens Automation & Drives Group have given top priority to finding ways of smoothing the way into the next millennium.

We are making detailed investigations into the behavior of our products, applying the internationally recognized test profiles of the British Standards Institution. The results of these investigations can be found in our Year 2000 product database under the following Internet address:

http://www.ad.siemens.de/year2000

Defects in the functioning of individual products, systems or the whole plant may occur as a result of the changeover. These can be due to constellations resulting from a specific combination of products and systems and from individual adaptation and/or expansion of the products and systems.

If you have any questions on this matter, please contact your local Siemens office.

Conditions of Sale and Delivery

Subject to the General Conditions of Supply and Delivery for Products and Services of the Electrical and Electronic Industry and to any other conditions agreed upon with the recipients of catalogs.

■
The technical data, dimensions and weights are subject to change unless otherwise stated on the individual pages of this catalog.

The illustrations are for reference only.

All dimensions in this catalog are in mm.

We reserve the right to adjust the prices and shall charge the prices applying on the date of delivery.

Software products are subject to the General Conditions of Supply of Software Product for Automation Tasks.

Important note:

The technical data is intended for general information. Please note the operating instructions and the references indicated on the products for installation, operation and maintenance.

Issued by:
Automation and Drives Group (A&D)
Business Unit Large Drives
P.O. Box 47 43, D-90025 Nürnberg

http://www.ad.siemens.de

Responsible for:

Technical contents:
Siemens AG, A&D LD V, Nürnberg

Editors:
Siemens AG, A&D PT 5, Erlangen

Siemens Aktiengesellschaft

Order No.: E20002–K4012–A121–A1–7600
Printed in the Federal Republic of Germany
KG K 0999 7.0 E 76 En / 924070

Catalogs of the
Automation and Drives Group (A&D)

Further information can be obtained from our branch offices listed in the appendix of this catalog

Automation & Drives	*Catalog*
Interactive catalogs on CD-ROM	
• Components for Automation & Drives	CA 01

Analysis Systems	
Gas Analysis Equipment for the Process Industry	PA 10
Process Analysis, Components for Sample Preparation	PA 11
SIPAN Liquid Analysis	PA 20

Drive Systems	
Variable-Speed Drives	
DC Motors	DA 12
DC Drives Preferred Series up to 500 kW	DA 12.1
DC Drives Preferred Series 215 kW to 1500 kW	DA 12.2
SIMOREG Chassis Converters	DA 21
SIMOREG Static Converter Cabinets	DA 22
SIMOVERT PM Modular Converter Systems	DA 45
SIEMOSYN Motors	DA 48
SIMOVERT A Current-Source DC Link Converters	DA 62
MICROMASTER, MIDIMASTER	DA 64
Low-Voltage Motors for Variable-Speed Drives	DA 65.3
SIMOVERT MASTERDRIVES Vector Control	DA 65.10
SIMOVERT MASTERDRIVES Motion Control	DA 65.11
SIMOVERT P Voltage-Source DC Link Converters	DA 66
SITOR Semiconductors-Protection Fuses	DA 94.1
SIMADYN D Digital Control System	DA 99
Automation Systems for Machine Tools SIMODRIVE	NC 60.1,
• AC Main Spindle Motors 1PH2, 1PH3, 1PH4, 1PH7	NC 60.2
• AC Servomotors 1FK6, 1FN1, 1FS5, 1FT5, 1FT6	
• Converter System SIMODRIVE 611	
See under catalog heading „SINUMERIK & SIMODRIVE“	
Low-Voltage Three-Phase-Motors	
Project Manual	M 10
Squirrel-Cage Motors, Totally Enclosed, Fan-Cooled	M 11
Squirrel-Cage Motors, Fan-Cooled	M 17
High-Voltage Three-Phase Motors	M 2

Automation Systems for Machine Tools SINUMERIK & SIMODRIVE	
• Ordering Catalog	NC 60.1
• Technical Catalog	NC 60.2
• Cables, Connectors and System Components	NC Z
SINUMERIK 840C	NC 36

SIMATIC HMI (Human-Machine-Interface)	
Products/Systems	ST 80

SIMATIC Industrial Automation Systems	
SIMATIC PCS Process Control System	ST 45
SIMATIC S5/PC/505 Automation Systems	ST 50
Components for Totally Integrated Automation	ST 70
Supplementary Components	ST 71
SIMATIC PCS 7 Process Control System	ST PCS 7

Electrical Installation Technology	
Protective Switching and Fuse Systems	I 2.1
Building Management Systems with *instabus EIB*	
Program Overwiev Modular Devices	I 2.11
Characteristic Curves of LV Fuses	I 2.21
STAB Wall-Mounting Distribution Boards	I 2.31
SIKUS Floor-Mounting Distribution Boards	I 2.32
8PU Busway System	I 2.36

Systems Engineering	*Catalog*
Power supplies SITOP power	KT 10.1
System cables SIMATIC TOP connect	KT 10.2
MOBY Identification Systems	KT 21
SIWAREX Weighing Systems	KT 30
Industrial Microcomputers SICOMP	KT 51
Printers and Monitors for Automation and Drives	KT 61
Cabinet Packaging System for SIMATIC PCS 7	KT 71

SIMATIC NET	
	IK 10

Low-Voltage Controls and Distribution	
Controls and Distribution	NS K
Communication-Capable SIRIUS NET Controlgear, Controlgear, SIGUARD Safety Systems, Control and Signalling Devices, Switchgear, Transformers and DC Power Supplies, Main- and EMERGENCY-STOP Switches, Control Switches, Terminal Blocks	
Products and Systems for Low-Voltage Power Distribution	NS PS

PROFIBUS and AS-Interface	ST PI

TELEPERM M Process Control System	
AS 235, AS 235H and AS 235K automation systems	PLT 111
AS 388/TM and AS 488/TM automation systems	PLT 112
OS 525 operating and monitoring system	PLT 122
Operating and monitoring with WinCC/TM	PLT 123
CS 275 bus system	PLT 130

Process Engineering	
Field Instruments for Process Automation Measuring Instruments for Pressure, Differential Pressure, Flow, Level and Temperature, Positioners and Liquid Meters	FI 01
Digital und Bargraph Indicators, Standard Flush-mounting Instruments	MP 12 D
Process Recorders, Flush-mounted Recorders in Standardized Cases	MP 20
Process Recorders, Spare Parts, Accessories and Consumable Material for Older Designs of Recorders	MP 20.1
SIPART, Controllers, Software	MP 31

Vacuum Pumps/Compressors	
Oil-Free Vacuum Pumps, Compressors (Blowers), Radial Blowers, Liquid Pumps	PV

Pumps	
Vacuum Pumps and Compressors, System ELMO-F	Cat. Sheets PF
Vacuum Pumps and Compressors, System ELMO-G	Cat. Sheets PG

System Solutions	
Applications, Products and Services for Industry	SL 01
Automation Solutions in the Plastic Industry	
• with SIMATIC S7	SL 10
• with SIMATIC S5	ST 58